SIEMENS

Series 81000™ 5-7.2kV Medium Voltage Vacuum Contactors

Types 96H35 and 97H35 (5kV)
Types 96H37 and 97H37 (7.2kV)

Instructions

Installation

Operation

Maintenance

SGIM-9088D

⚠ DANGER

Hazardous voltages.

Will cause death, serious personal injury or equipment or property damage.

Always de-energize and ground the equipment before maintenance. Read and understand this instruction manual before installing, operating, or maintaining the equipment. Maintenance should be performed only by qualified personnel. The use of unauthorized parts in the repair of the equipment, altering of the design, or tampering by unqualified personnel will result in dangerous conditions which will cause death or serious personal injury or equipment or property damage. Follow all safety instructions contained herein.

IMPORTANT

The information contained herein is general in nature and not intended for specific application purposes. It does not relieve the user of responsibility to use sound practices in application, installation, operation, and maintenance of the equipment purchased. Siemens reserves the right to make changes in the specifications shown herein or to make improvements at any time without notice or obligations. Should a conflict arise between the general information contained in this publication and the contents of drawings or supplementary material or both, the latter shall take precedence.

QUALIFIED PERSON

For the purpose of this manual and product labels, a qualified person is one who is familiar with the installation, construction, operation, or maintenance of the equipment and the hazards involved. In addition, this person has the following qualifications:

(a) **is trained and authorized** to energize, de-energize, clear, ground, and tag circuits and equipment in accordance with established safety practices.

(b) **is trained** in the proper care and use of protective equipment such as rubber gloves, hard hat, safety glasses or face shields, flash clothing, etc., in accordance with established safety practices.

(c) **is trained** in rendering first aid.

GENERAL

These instructions do not purport to cover all details or variations in equipment, nor to provide for every possible contingency to be met in connection with installation, operation, or maintenance. Should further information be desired or should particular problems arise which are not covered sufficiently for the purchaser's purposes, the matter should be referred to the local Siemens sales office.

The contents of this instruction manual shall not become part of or modify any prior or existing agreement, commitment or relationship. The sales contract contains the entire obligation of Siemens Power Transmission & Distribution, Inc. The warranty contained in the contract between the parties is the sole warranty of Siemens Power Transmission & Distribution, Inc. Any statements contained herein do not create new warranties or modify the existing warranty.

Table of Contents

Table of Contents

Introduction and Safety 2
Introduction 2
Qualified Person 2
Signal Words 2
Dangerous Procedures 2
Field Service Operation 2

Description 3-6
General 3
3TL8 Contactor 4
Use of 96H3 or 97H3 Contactor in Other Cell Types 4
Service Conditions 5
Control Voltage 5
Application Considerations 5
Blown Fuse Trip Mechanism (option) 5
Mechanically Latched Contactors (option) 5
Surge Protection (Option) 5
Nomenclature 5

Receiving Inspection 7
Handling 7
Storage 7

Installation 8-12
Introduction 8
Site Preparation and Mounting 8
Electrical Connections 8
Latched Contactors 8
Pre-Energization Check 9

Maintenance 13-23
Introduction 13
General 13
Recommended Maintenance and Lubrication 13
Blown Fuse Trip Mechanism 14
Vacuum Contactor Inspection 14
Main Contact Inspection 15
Closing coil 16
Latch Mechanism (Latched Contactor Only) 16
Mechanical Interlock Arm (97H3 only) 16
Fuse Clip Inspection 16
Terminals and Joints 16
Periodic Cleaning 16
Dielectric Test 16
Recommended Torque 16
Vacuum Interrupter Replacement Procedure 17
Removing the Interrupter 17
Installing the New Interrupter 18
Drive Connection and Adjustment 19
Mechanical Latch Replacement 19
Main (Magnet) Coil Replacement 20
Auxiliary Switch Replacement 21
Electronic Economizer Replacement 22

Maintenance After a Fault 24
Introduction 24
General 24
Inspection 24
Enclosures 24
Terminals and Internal Conductors 24
Overload Relays 24
Fuse Holders 24
Fuses 24

Trouble Shooting 25

Parts 26-31

Cover 1917-96

Introduction and Safety

Introduction
The 96H3 and 97H3 families of Medium Voltage Contactors are designed to meet all applicable NEMA standards. Successful application and operation of this equipment depends as much upon proper installation and maintenance by the user as it does upon the careful design and fabrication by Siemens.

The purpose of this Instruction Manual is to assist the user in developing safe and efficient procedures for the installation, maintenance and use of the equipment.

Contact the nearest Siemens representative if any additional information is desired.

⚠ DANGER

Hazardous voltages.

Will cause death, serious personal injury or property damage.

Always de-energize and ground the equipment before maintenance. Installation, operation, or maintenance should be performed only by qualified persons thoroughly familiar with the equipment, instruction manuals and drawings. Read and understand this instruction manual before using the equipment.

Qualified Person
For the purpose of this manual and product labels, a **Qualified Person** is one who is familiar with the installation, construction or operation of the equipment and the hazards involved. In addition, this person has the following qualifications:

- Training and authorization to energize, de-energize, clear, ground and tag circuits and equipment in accordance with established safety practices.
- Training in the proper care and use of protective equipment such as rubber gloves, hard hat, safety glasses, face shields, flash clothing, etc., in accordance with established safety procedures.
- Training in rendering first aid.

Signal Words
The signal words "**Danger**", "**Warning**" and "**Caution**" used in this manual indicate the degree of hazard that may be encountered by the user. These words are defined as follows:

Danger - Indicates an imminently hazardous situation which, if not avoided, **will** result in death or serious injury.

Warning - Indicates a potentially hazardous situation which, if not avoided, **could** result in death or serious injury.

Caution - indicates a potentially hazardous situation which, if not avoided, **may** result in minor or moderate injury.

Dangerous Procedures
In addition to other procedures described in this manual as dangerous, user personnel must adhere to the following:

1. **Always work only on de-energized equipment. Always de-energize a contactor, and remove it from the equipment before performing any tests, maintenance or repair.**
2. **Always let an interlock device or safety mechanism perform its function without forcing or defeating the device.**

Field Service Operation
Siemens can provide competent, well-trained Field Service Representatives to provide technical guidance and advisory assistance for the installation, overhaul, repair and maintenance of Siemens equipment, processes and systems. Contact regional service centers, sales offices or the factory for details, or telephone Siemens Field Service at 1-800-347-6659.
(919-365-2200 outside the U.S.).

Description

General
Siemens Type 96H3 and 97H3 vacuum contactors are provided for use in Series 81000™ medium voltage controllers. These contactors provide the advantage of long mechanical and electrical life with low maintenance. They are suitable for loads of all types, including three-phase motors, transformers, capacitors and resistive loads.

The overall dimensions of the vacuum contactor are 18 inches (457mm) wide by 27.5 inches (699mm) high by 23.87 inches (606mm) deep. The vacuum contactor with single or double barrel power fuses can be installed in Series 81000 Class E2 controllers of either one high (5kV or 7kV), two high (5kV or 7kV) or three high (5kV) construction.

The Type 96H3 or 97H3 vacuum contactors consists of: (1) a low voltage section which contains the main coil drive and auxiliary contacts; (2) a medium voltage section which houses the vacuum interrupter, and (3) a support structure which provides mounting for the power fuses, control transformer and primary fuses, and drawout attachments. Since interruption is accomplished completely within the vacuum interrupters, items such as arc chutes, blowout coils and pole plates are not required with vacuum contactors.

Voltage surge suppressors are sometimes furnished at the controller load terminals to limit transient overvoltages caused by multiple reignitions which may occur due to the use of vacuum interrupters. For application guidelines, refer to the instruction manual for Series 81000™ Controllers - SGIM-9068.

Table 1. 96H3 or 97H3 Contactor Ratings

Contactor Type	Maximum Voltage Rating	Enclosed Continuous Ampere Rating	Interrupting Capacity		Impulse Level (BIL) (kV)
			Unfused Class E1 Controller (kA) symmetrical	Fused Class E2 Controller (MVA)	
96H35 97H35	5.0kV	360	5kA	200 @ 2.3kV 350 @ 4.0kV 400 @ 4.6kV	60
96H37 97H37	7.2kV	360	4.2kA	570 @ 6.6kV	60

Table 2. Maximum motor fuse and transformer fuse rating

Fused Contactor Type	3 Phase Horsepower Rating at Utilization Voltage									Maximum Motor Fuse Rating	Transformer Loads				Maximum Transf. Fuse Rating
	2300V			4000-4600V			6600V				Maximum 3-Phase kVA at Distribution Voltage				
	Syn. Motors	Syn. Motors	Ind. Motors	Syn. Motors	Syn. Motors	Ind. Motors	Syn. Motors	Syn. Motors	Ind. Motors						
	0.8PF	1.0PF		0.8PF	1.0PF		0.8PF	1.0PF			2400V	4160V	4800V	6900V	
96H35 97H35	1500	1750	1500	2500	3000	2500	—	—	—	24R	1500	2500	2500	—	450E
96H37 97H37	—	—	—	—	—	—	4000	5000	4000	24R	—	—	—	1500	200E

Table 3. Operating Data (Magnetically Held)

Rated Voltage	7200V
Rated Current	400A (open) — 360A (enclosed)
Permissible Switching Frequency	1200/Hour
Mechanical Life	1,000,000 operations
Electrical Life	250,000 operations
Closing Time	150 ms
Minimum Closing Command Duration	300 ms
Opening Time	325 ± 75 ms (standard) (Fast dropout option ≤ 50 ms)
Arcing Time	10-20 ms
Pick-Up Voltage AC or DC, Nominal	85% Rated (Hot) - 70% Rated (Cold)
Drop-Out Voltage AC or DC, Nominal	74 ± 2V
Rated Control Voltage	120-240 V 50/60 Hz 125-250 VDC
Coil Circuit Inrush	600W
Coil Circuit Holding	90W
Auxiliary Contact Arrangement	2 NO - 2 NC (2 NO + 2 NC for purchaser's use)
Auxiliary Contact Rating	10A, 600V (NEMA Class A600)

Table 4. Operating Data (Latched Type)

Permissible Switching Frequency	60/Hour
Mechanical Life	100,000 Operations
Control Voltage Options Available	24VDC, 32VDC, 48VDC, 125 VDC, 250VDC, 115VAC, 240VAC
Tripping Voltage	85% Rating DC
Tripping Power	500 W

3TL8 Contactor
The 96H3 and 97H3 families of drawout contactors incorporate the Siemens Type 3TL8 contactor, mounted in a drawout carriage. The construction of the basic 3TL8 contactor is shown in **Figure 1**.

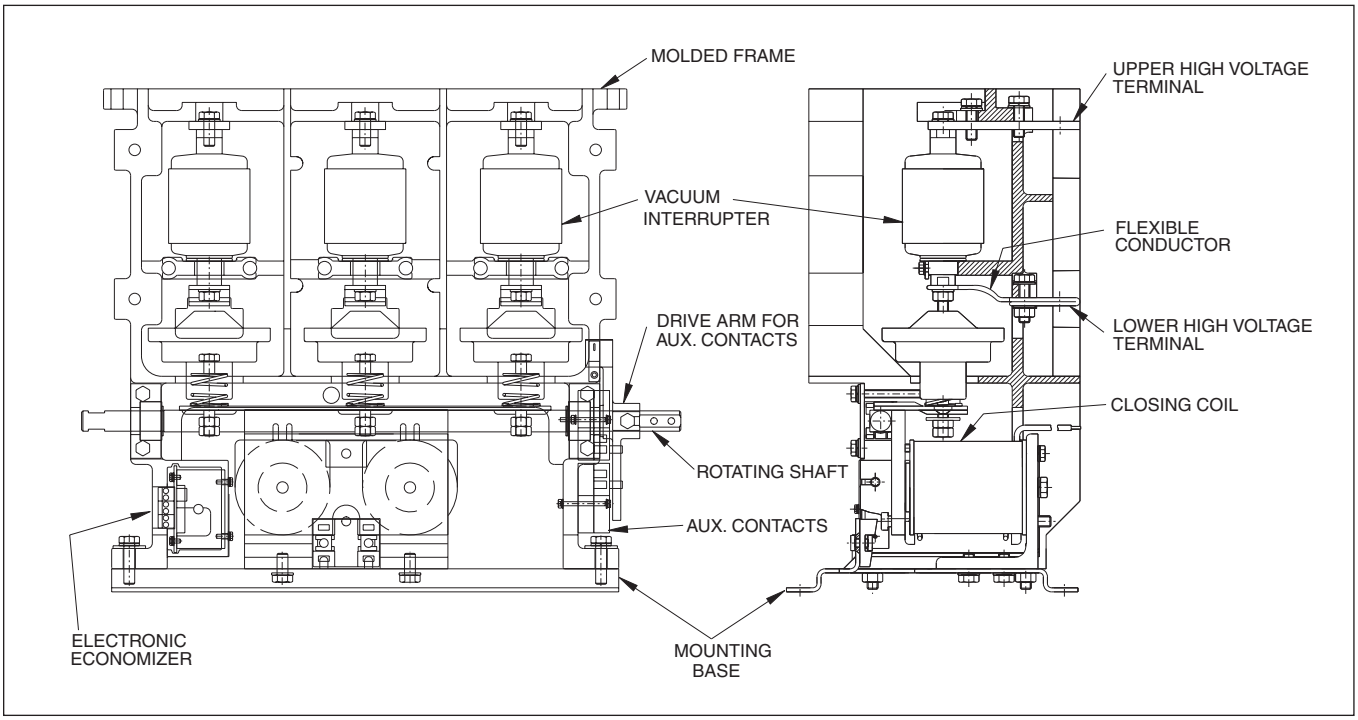

Figure 1. Construction of Type 3TL8 Contactor

Use of 96H3 or 97H3 Contactor in Other Cell Types
The types 96H3 and 97H3 contactors differ in the manner in which the interlocks are constructed and operate. Therefore, 96H3 and 97H3 contactors are not interchangeable with each other. Similarly, these contactors are not directly interchangeable with the earlier 90H3 contactors. Modifications necessary to allow use of a 96H3 or a 97H3 contactor in a 90H3, 93H3, or 94H3 cell are summarized in **Table 5**.

Table 5. Modification Matrix for Use of 96H3/97H3 Contactor in 90H3/93H3/94H3/96H3/97H3 Cells

		Contactor Type	
		93H3 or 96H3	94H3 or 97H3
Power Cell (Compartment) Type	90H3	Cell modification kit 25-213-200-501 required. Mount per 25-154-488-424. Kit includes new interlock spring and replacement mechanical latch. Modified cell will allow use of either 90H3, 93H3, or 96H3 contactor.	Cell modification kit 25-154-555-805 required. Mount per 25-213-213-405. Kit includes replacement interlock parts. Modified cell will no longer allow use of 90H3 contactor.
	93H3 or 96H3	———	Cell modification kit 25-154-555-804 required. Mount per 25-213-213-404. Kit includes replacement interlock parts. Modified cell will no longer allow use of 93H3 contactor.
	94H3 or 97H3	Modification of contactor required. Remove cable interlock assembly from 93H3 or 96H3 contactor, and replace with new interlock lever to convert to 94H3/97H3 configuration. Cell interlock modification also required. Use modification kit 25-154-555-811, which includes parts needed for contactor as well as for cell. Mount per 25-213-213-411.	———

Description

Service Conditions
The 96H3 and 97H3 vacuum contactors should be used in the following conditions.

Table 6. Normal Service Conditions

Altitude:	Less than 2,000 m (6600 ft) Above 2,000 m consult factory
Ambient temperature:	-5ºC min. to +40ºC max. Average over a period of 24 hr shall not exceed +35ºC
Relative humidity:	45% min. to 85% max.

If the contactor is to be used in conditions other than those specified above, please consult Siemens.

The location where the contactor is to be installed should be free from dust, corrosive gas and moisture. When it is to be used in a chemical plant or in outdoor enclosures, take necessary precautions against corrosion, water seepage and condensation.

Control Voltage
The drive unit for the closing coil assembly is installed in a cavity in the molded frame housing. The closing circuit can be operated by applying either AC or DC to this drive unit. The drive unit accepts any control voltage in the range of 120-250 volts, AC or DC.

The optional latch trip circuit uses DC as standard. When a latched contactor is operated using AC power, it is recommended that a capacitor trip device be used.

Application Considerations
1. Verify that the voltage and current applied is within the specified ratings. (See **Tables 1** and **2**)
2. The switching life of the vacuum interrupter is approximately 250,000 operations. The vacuum interrupter should be replaced after 250,000 operations. If the contactor is not protected by current limiting fuses, the vacuum interrupters should be replaced if they have interrupted fault currents at or near their maximum (unfused) interrupting rating.
3. When the contactor is applied to a capacitor load, be sure to use a space heater to keep humidity low. Be sure to use a heater adequately sized for the compartment in which the contactor is installed. The contactor should always be applied with a protective power fuse.
4. If the interrupter becomes dirty, simply clean it with a non-toxic cleaner such as denatured alcohol.

Blown Fuse Trip Mechanism (option)
Contactors can be supplied with an anti-single phase trip mechanism which offers protection from single phasing due to a blown power fuse. Fused contactors equipped with the blown fuse trip mechanism are pre-adjusted at the factory so that the opening of one or more power fuses results in de-energizing the contactor coil, thus interrupting current to the load. When a power fuse blows, a plunger extends from the load end of the fuse which rotates the spring-loaded trip bar and releases a pre-compressed micro-switch on the side of the contactor. A contact on the micro-switch opens at this time and de-energizes the contactor magnet coil.

Mechanically Latched Contactors (option)
Mechanically latched contactors are available which consist of a standard 96H3 or 97H3 contactor with the addition of a mechanical latch assembly. The mechanical latch holds the armature of the contactor closed against the magnet core after the contactor is energized (closed) and control power is removed. A pushbutton on the high voltage compartment door, when manually depressed, actuates the trip rod and trips the contactor by releasing the mechanical latch.

Electrical trip with an internal solenoid is optionally available from the normal control transformer source or from a stored energy (capacitor) source which is charged from the normal control source. The stored energy source provides reliable trip power for a maximum delay of 5 minutes after loss of control power. Special trip circuits energized from remote power sources can be provided. The contactor latch is designed for DC control power. Standard control circuit options are available for 115V and 230 VAC trip circuits using rectifiers or rectifiers with capacitors to convert AC to DC to operate the mechanical latch.

Refer to **Tables 3** and **4** for latched contactor operating data. Refer to specific drawings supplied with the equipment for details on connection and operation.

Surge Protection (Option)
The 96H3 and 97H3 vacuum contactors are suitable for application without protection from surges related to switching with vacuum, except for jogging or inching duty with small (under 100HP) motors. For such applications, metal-oxide surge limiters should be specified.

Regardless of the switching means employed, if the insulation integrity of the motor is suspect, such as for very old machines, it may be desirable to add surge protection for the machine, or to consider upgrading the machine to modern insulation standards.

Nomenclature
The contactor configuration can be identified through the nomenclature description shown in **Table 7**.

Table 7. Contactor Catalog Number System

9XH3 X 3 X XX X X X X X

Contactor Type
6 = 96H3 Contactor for use in 93H3 or 96H3 cells (cable interlock)
7 = 97H3 Contactor for use in 94H3 or 97H3 cells (lever interlock)

Insulation Voltage
5 = 5 kV
7 = 7.2 kV

Number of Poles
3 = 3 Poles

Interruption Capacity
1 = 5.0kA @5.0kV, 4.3kA @7.2kV
2 = 200 MVA
3 = 350 MVA
4 = 400 MVA
5 = 570 MVA

Main Fuse Rating

00 - NONE	20 = 20E	33 = 150E
02 = 2R	25 = 25E	34 = 200E
03 = 3R	26 = 30E	35 = 250E
04 = 4R	27 = 40E	36 = 300E
06 = 6R	28 = 50E	37 = 325E
09 = 9R	29 = 65E	39 = 350E
12 = 12R	30 = 80E	40 = 375E
18 = 18R	31 = 100E	41 = 400E
24 = 24R	32 = 125E	42 = 450E
99 = MISC		

Other Options (if used)
L = Latched Contactor w/Electrical Trip
C = Latched Contactor w/Capacitor Trip
S = Special Contactor, See drawing

Contactor or Carriage Designation
A = Drawout Contactor
F = Fuse Carriage (for 720A Controller)
T = Drawout Contactor with Anti-Single Phase Trip Bar

CPT Capacity in kVA
0 = No CPT
1 = 0.75 kVA
2 = 1.5 kVA
3 = 2.0 kVA
4 = 2.5 kVA
5 = 3.0 kVA
6 = 3.25 kVA
7 = Other

CPT Secondary or Control Circuit Voltage
A = 115VAC
B = 230VAC
C = 125VDC
D = 250VDC
E = Other
N = None

CPT Primary Voltage
0 = No CPT
2 = 2300V 60Hz
3 = 3300V 60Hz
4 = 4000V 60Hz
5 = 4600V 60Hz
6 = 3300V 50Hz
7 = 6600V 60Hz
8 = Special
9 = Other (Max. 7200V)

Receiving Inspection

Upon receipt of this equipment, an immediate inspection should be made for any damage which may have occurred during shipment . The inspection should include examination of the packaging material and the contactor. Be sure to look for concealed damage and do not discard the packaging material. If damage is found, note damage on "Bill of Lading" prior to accepting receipt of the shipment, if possible.

NOTE: The way visible shipping damage is treated by the consignee prior to signing the delivery receipt can determine the outcome of the damage claim to be filed. Notification to the carrier within the 15 day limit on concealed damage is essential if loss resulting from unsettled claims is to be eliminated or minimized.

A claim should be immediately filed with the carrier, and the Siemens sales office should be notified if damage or loss is discovered. A description of the damage and as much identification information as possible should accompany the claim.

Handling

For convenience and safety in lifting or moving the contactor, a lifting device similar to that shown in **Figure 2** should be used.

NOTE: The lifting device is not intended to be used as a means of transporting the contactor in the raised position. The contactor should be transported with the lifting device in its lowered position.

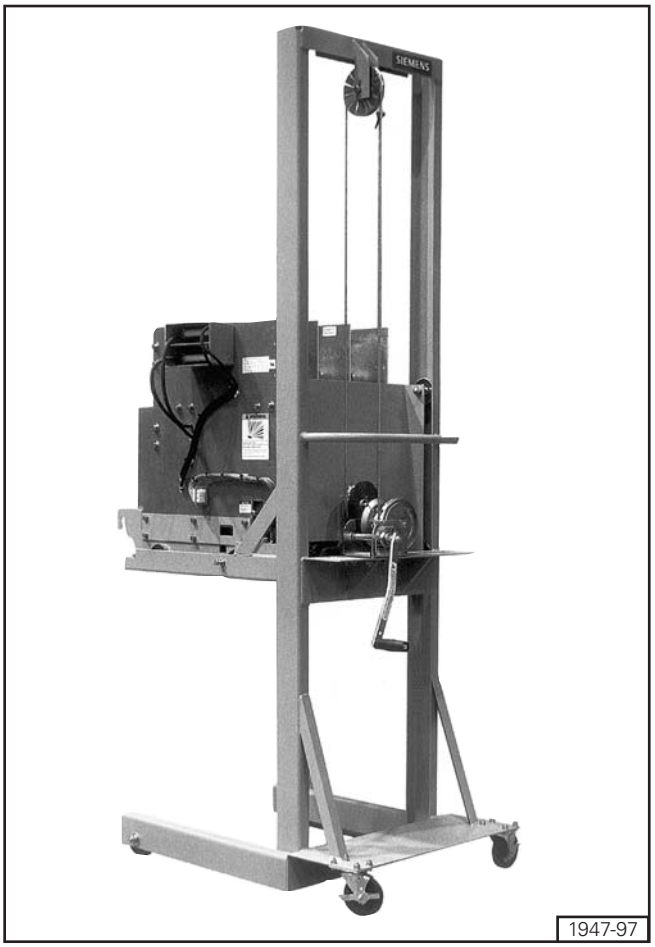

Figure 2. Use of lift device with 97H3 contactor

A crane or hoist can also be used to handle the contactor, if the lifting device is not available.

If a forklift is utilized, the following precautions should be taken when moving contactors:

1. Keep the contactor in an upright position only.
2. Make sure the load is properly balanced on the forks.
3. Place protective material between the contactor and the forklift to prevent bending or scratching.
4. Securely strap the contactor to the forklift to prevent shifting or tipping.
5. Excessive speeds and sudden starts, stops, and turns must be avoided when handling the contactor.
6. Lift the contactor only high enough to clear obstructions on the floor.
7. Take care to avoid collisions with structures, other equipment, or personnel when moving the contactor.
8. **Never lift a contactor above an area where personnel are located.**

Storage

The contactor must be stored in a clean, dry, dust and condensation-free environment if it cannot be placed into service reasonably soon after receipt. Do not store equipment outdoors. A standard 75 watt light bulb, connected to burn continuously, should be placed near the lower portion of the contactor to prevent condensation.

⚠DANGER

Hazardous voltages.

Will cause electric shock, burn or electrocution.

Disconnect, ground, and lockout incoming power and control voltage sources before beginning work on this or any other electrical equipment.

Installation should be performed only by qualified personnel.

Introduction

Before performing any installation activities:

- Test all power terminals to verify that incoming power has been disconnected. Use only approved high voltage test equipment to check voltage on power terminals. **Do not attempt to measure high voltage (over 600 volts) with a volt-ohm meter.**
- Check all control and secondary circuit terminals with a voltmeter to make certain that all sources of incoming control and secondary voltage have been disconnected.
- Connect safety grounds to power terminals after the system has been de-energized, and prior to working on the equipment.
- Perform all disconnecting, grounding, and lockout operations in accordance with established safety procedures.
- Follow the procedure outlined in the Pre-Energization Check section of this manual before power is restored.

Site Preparation and Mounting

Installation shall be in accordance with the National Electrical Code, ANSI, and NFPA 70 Standards.

The contactor enclosure should be installed in a clean, dry, heated location with good ventilation. It should be readily accessible for cleaning and inspection and should be carefully set up and leveled on its supporting foundation and secured in place.

All adjustments have been made at the factory before shipping and generally no change is required. See that all contact surfaces are clean and smooth, and that current-carrying parts are not damaged.

⚠WARNING

Hazardous voltages.

Can cause shock, burn or electrocution.

Dielectric or megger testing should only be conducted by qualified personnel. Refer to instructions provided with the testing equipment for safety instructions.

Electrical Connections

Inspect all insulated wiring to see that no damage has occurred. Test the high voltage wiring for possible grounds or short circuits.

A dielectric test at 2.25 times the nominal system voltage plus 2000 volts, applied for one minute between phases and from all phases to ground is the preferred method. Be sure to disconnect any devices (control power transformer, etc.) from the circuit which could be damaged by the test voltage. If a hi-pot tester is not available, then a megger test at 1000 volts is a suitable second choice.

⚠WARNING

Vacuum interrupters may emit X-ray radiation.

Can cause personal injury.

X-rays can be produced when a high voltage is placed across two circuit elements in a vacuum.

Keep personnel more than three (3) feet away from a contactor under test.

Note: Do not use DC high potential testers incorporating half-wave rectification. These devices produce high peak voltages.

These high voltages will produce X-ray radiation. These devices also show erroneous readings of leakage current when testing vacuum interrupters.

Make sure that all current-carrying parts outside the contactor have adequate current-carrying capacity and are correctly insulated in accordance with the requirements of the National Electrical Code (NEC). All electrical connections should be made carefully per the wiring diagram furnished with the equipment. Tighten all lugs to recommended torque values (refer to **Table 10**). If crimp type terminals have been furnished, use only the crimping tools recommended by the manufacturer of the terminal.

Latched Contactors

An extension is required to extend 3.62" from the auxiliary trip lever for a latched contactor used in bottom compartments.

All latched contactors shipped in bottom compartment have an extension attached to the auxiliary trip lever perpendicular to the door. For contactors shipped in middle or top compartments, or shipped separately, the extensions are attached to the auxiliary trip lever and in parallel to the door. When contactors are shipped separately and are to be used in a bottom compartment, the extension must be assembled to the auxiliary trip lever per **Figure 3**.

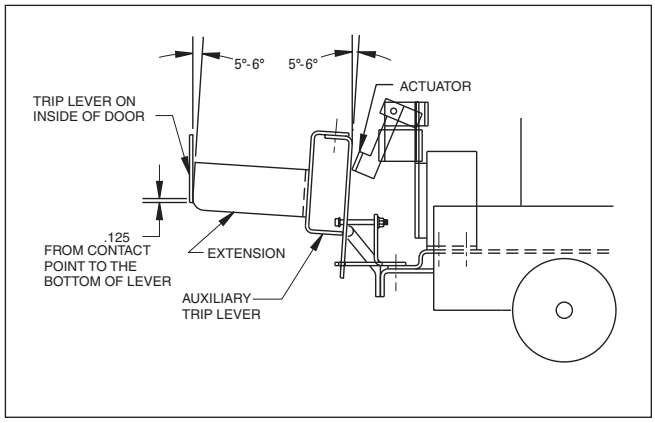

Figure 3. Latched Contactor Extension

Pre-Energization Check

⚠ DANGER

Hazardous voltages.

Will cause death, serious personal injury or property damage.

Disconnect, lockout, and ground incoming power and control voltage sources before beginning work on this or any other electrical equipment.

All pre-energization checks outlined in this instruction manual must be performed before the equipment is energized. This equipment should be energized by qualified personnel only.

1. Be sure all phase barriers are correctly installed.
2. Clean any excessive dust and dirt that may have accumulated if the contactor has been in storage.
3. Connect only test power and operate the contactor electrically several times. The contactor should pick up and seal cleanly at 85% to 110% of rated control voltage (See Operating Data, **Table 3**)
4. For latched type contactor, check that the latch correctly engages and trips when the close/trip signals are applied. Also, manually trip the contactor using the trip lever to verify proper operation.
5. Complete all Pre-Energization Checks in accordance with Series 81000 Controller Instruction Manual SGIM-9068.

The contactor may now be placed in service by connecting main incoming power. The contactor must be appropriately guarded or isolated before energizing the medium voltage circuit. Refer to Series 81000 Controller Instruction Manual SGIM-9068 for additional information. For typical control circuit diagrams see **Figures 4, 5** and **6**.

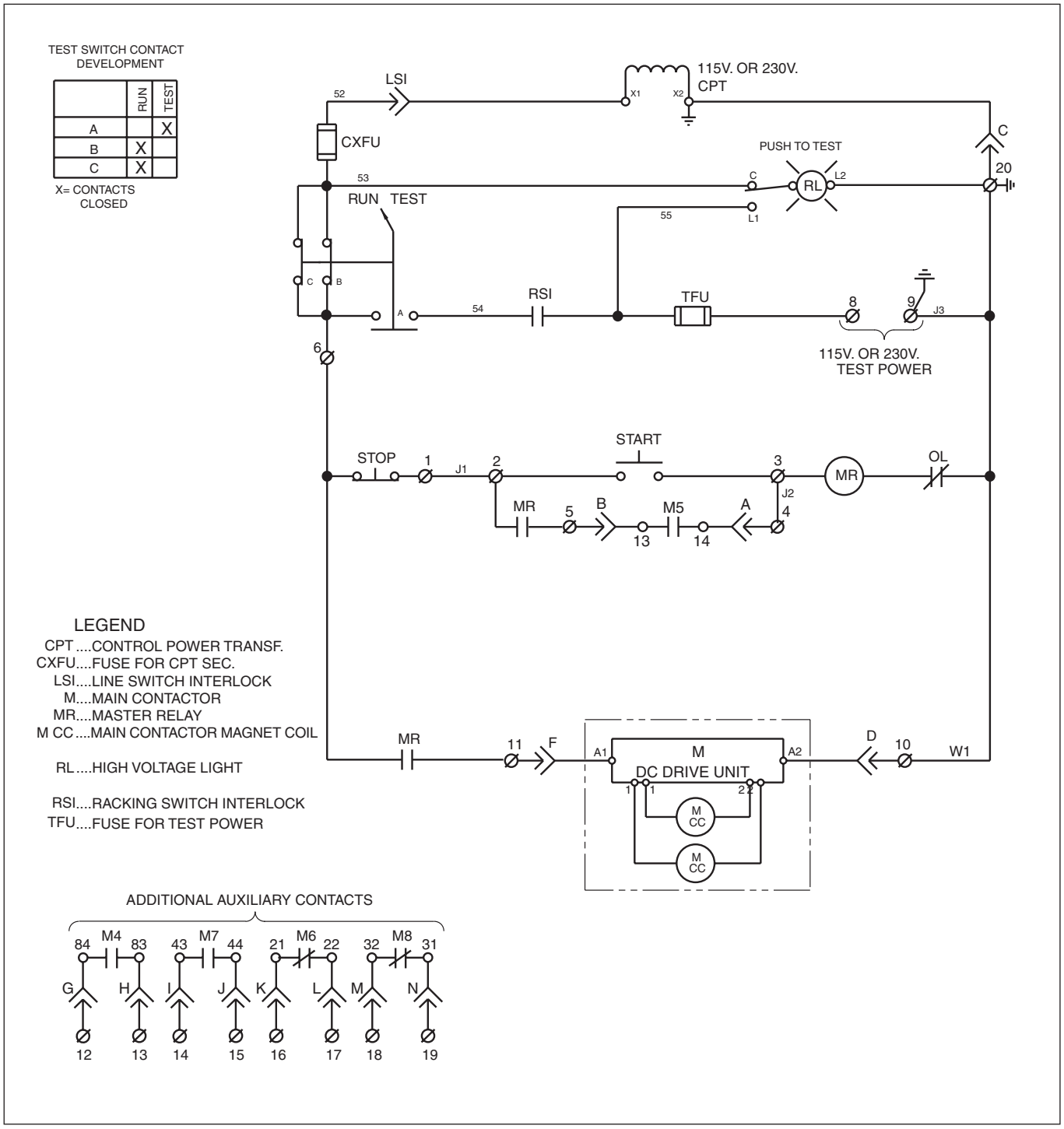

Figure 4. Series 81000 Controller with Type 96H3 or 97H3 Magnetically-held Contactor

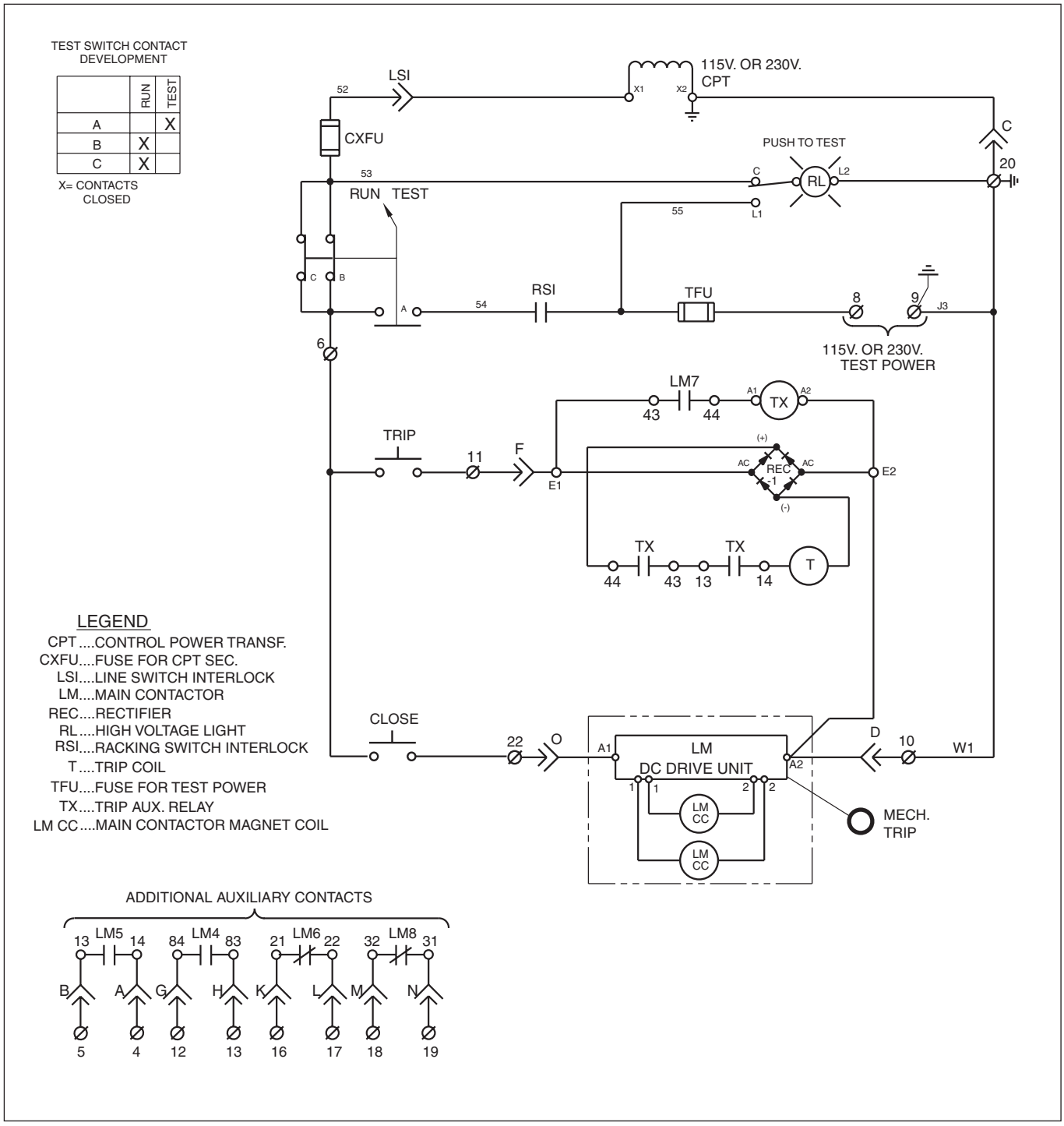

Figure 5. Series 81000 Controller with Type 96H3 or 97H3 Contactor with Mechanical Latch, and Electrical Trip from AC Source

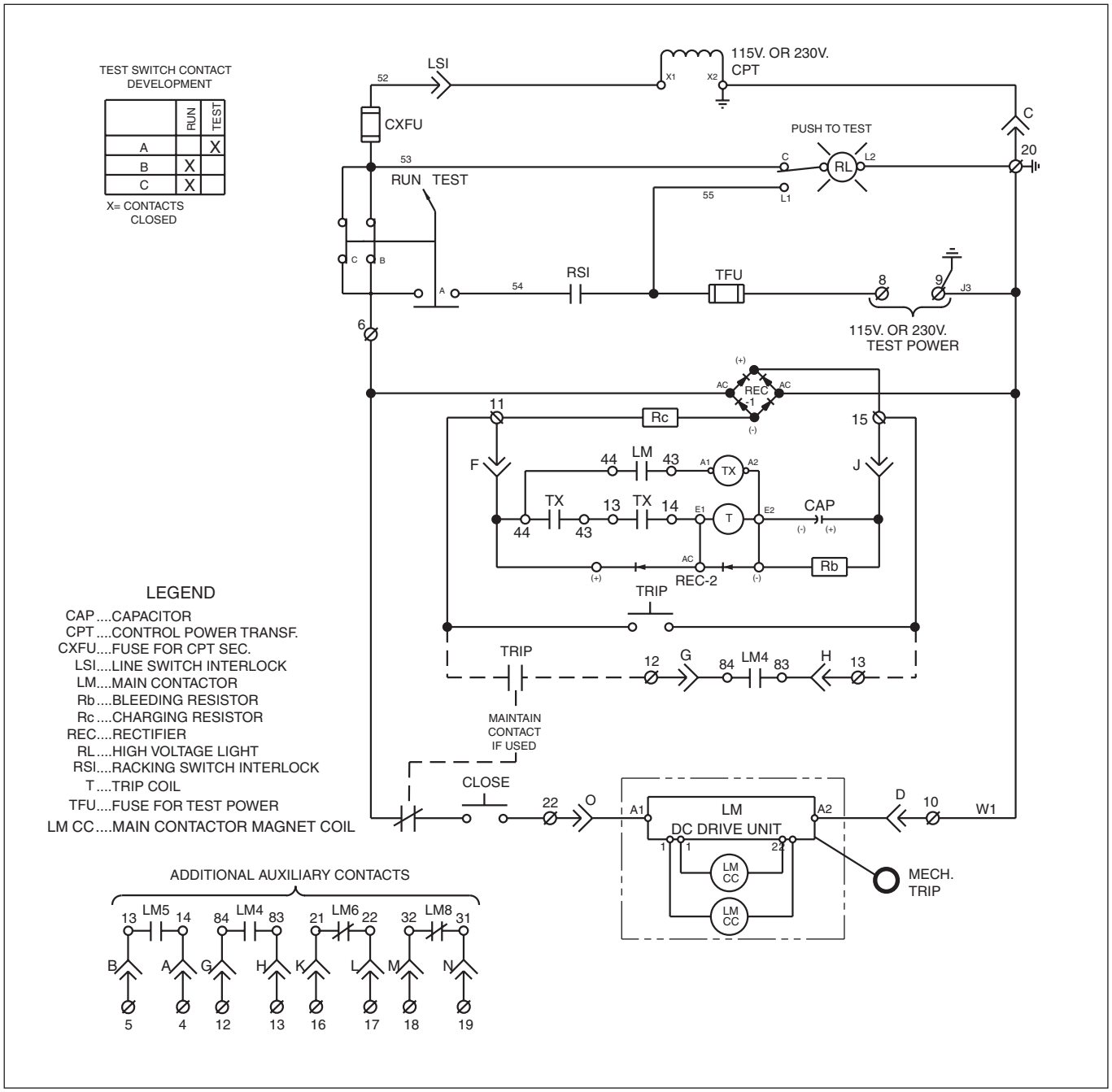

Figure 6. Series 81000 Controller with Type 96H3 or 97H3 Contactor with Mechanical Latch, and Electrical Trip from AC Capacitor Source

Maintenance

⚠DANGER

Hazardous voltages.

Will cause death, serious personal injury, or property damage.

Disconnect, lockout, and ground incoming power and control voltage sources before beginning work on this or any other electrical equipment.

Maintenance should be performed only by qualified personnel.

Introduction

- Before performing any maintenance:
- Test all power terminals to verify that incoming power has been disconnected. Use only approved high voltage test equipment to check voltage on power terminals. **Do not attempt to measure high voltage (over 600 volts) with a volt-ohm meter.**
- Check all control and secondary circuit terminals with a voltmeter to make certain that all sources of incoming control and secondary voltage have been disconnected.
- Connect safety grounds to power terminals after the system has been de-energized, and prior to working on the equipment.
- Perform all disconnecting, grounding, and lockout operations in accordance with established safety procedures.
- Follow the procedure outlined in the Pre-Energization Check section of this manual before power is restored.

General

For the safety of maintenance personnel as well as others who might be exposed to hazards associated with maintenance activities, the safety related work practices of NFPA 70E, parts II and III should always be followed when working on electrical equipment. Maintenance personnel should be trained in the safety practices, procedures and requirements that pertain to their respective job assignments. This manual should be reviewed and retained in a location readily accessible for reference during maintenance of this equipment.

The user must establish a periodic maintenance program to ensure trouble-free and safe operation. The frequency of inspection, periodic cleaning and preventive maintenance will depend upon the operating conditions. NFPA Publication 70B "Electrical Equipment Maintenance" may be used as a guide to establish such a program. **A preventive maintenance program is not intended to cover reconditioning or major repair, but should be designed to reveal, if possible, the need for such actions in time to prevent malfunctions during operation.**

⚠DANGER

Use of unauthorized parts in the repair of the equipment, altering of the design, or tampering by unqualified personnel will result in dangerous conditions.

Will cause death, serious personal injury, or equipment damage.

Follow all safety instructions contained herein.

Recommended Maintenance and Lubrication

Periodic maintenance and lubrication should include all of the tasks shown in **Table 8**. Recommended procedures for each of the listed tasks are provided in this section of the manual, or in the references cited in this manual.

⚠WARNING

Failure to properly maintain the equipment can result in death, serious personal injury, or product failure, and can prevent successful functioning of connected apparatus.

The instructions contained herein should be carefully reviewed, understood, and followed.

The maintenance tasks in **Table 8** must be performed regularly.

Table 8. Maintenance Tasks

- Blown fuse trip mechanism checks
- Vacuum contactor inspection
- Main contacts inspection
- Closing coil check
- Latch mechanism check
- Mechanical interlock checks
- Fuse clip inspection
- Check of terminals and joints
- Periodic Cleaning
- Dielectric test
- Maintenance tasks in manual for Series 81000 Controllers, SGIM-9068

Maintenance of the vacuum contactor should only be performed with the contactor de-energized and withdrawn from the controller compartment. In the case where a vacuum interrupter must be replaced, control power is required to close the contactor during the "Operation Check".

The list of tasks in **Table 8** does not represent an exhaustive survey of maintenance steps necessary to ensure safe operation of the equipment. Particular applications may require further procedures. Should further information be desired or should particular problems arise which are not covered sufficiently for the Purchaser's purposes, the matter should be referred to the local Siemens sales office.

⚠DANGER

Hazardous voltage.

Will cause death, serious personal injury, or property damage.

Always de-energize and ground the equipment before performing maintenance.

Blown Fuse Trip Mechanism

NOTE: Use of the trip mechanism with fuses other than Siemens type FM (for up to 5080 volts) or A720R (for up to 7200 volts) motor fuses can result in failure of the trip bar to operate.

After the trip mechanism has operated, or if any of the power fuses have been removed or replaced, the following checks and adjustments must be performed.

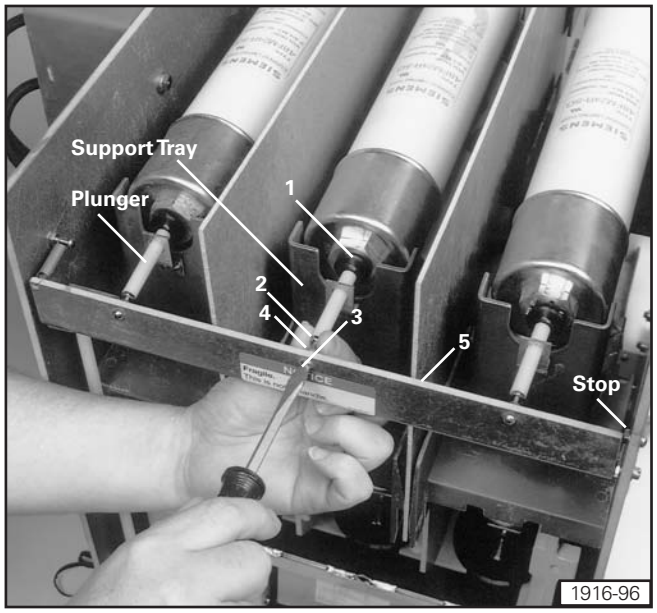

Figure 7. Adjustment of the Plunger

1. All fuses must be installed in clips with load side of fuse resting on support tray as shown in **Figure 7**. Plunger end of fuse must be facing forward, away from disconnect fingers on contactor.
2. With the trip bar in its normal spring return (deactivated position), the trip bar should rest against the stop screw on the right hand contactor side plate as shown in **Figure 7**. The trip bar must be held in this position while performing adjustments 3 and 4.
3. Adjust each of the three plunger assemblies shown in **Figure 7** to obtain a 1/16" (1.6mm) gap between the plunger (1) and the end of the corresponding fuse as follows: Insert a 1/16" (1.6mm) shim between the end of the fuse and the plunger (1). Loosen locknut (2) and turn adjusting screw (3) until there is no gap between stop nut (4) and trip bar (5). Retighten lock nut (2).
4. Referring to **Figure 8**, loosen the machine screw which threads into the pushrod and adjust outward (lengthen) until the micro-switch contacts just close. Then adjust outward one additional full turn and tighten the locknut.
5. Referring to **Figure 9**, insert a 3/16" (4.8mm) thick shim between one of the three plungers and the adjacent fuse, rotating the trip bar in the direction shown. The microswitch contacts should open at this point. If they do not, loosen the locknut and adjust the machine screw to shorten dimension "A" slightly until the switch contacts open, then retighten the locknut.

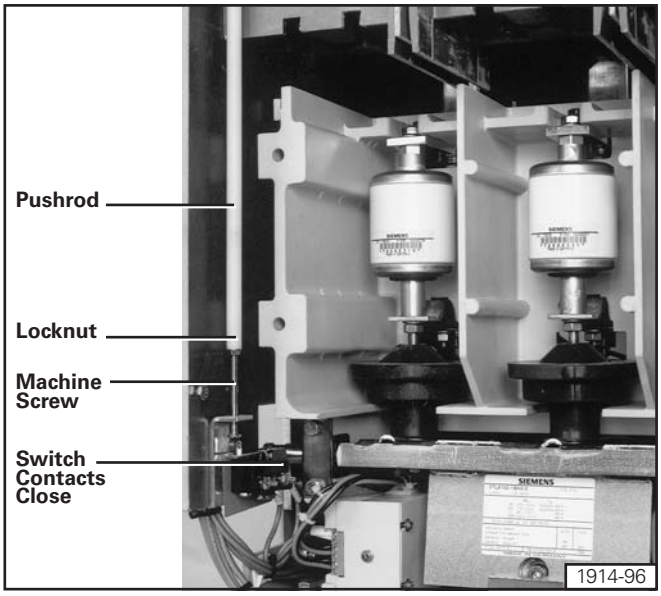

Figure 8. Adjustment of Trip Mechanism in Deactivated Position

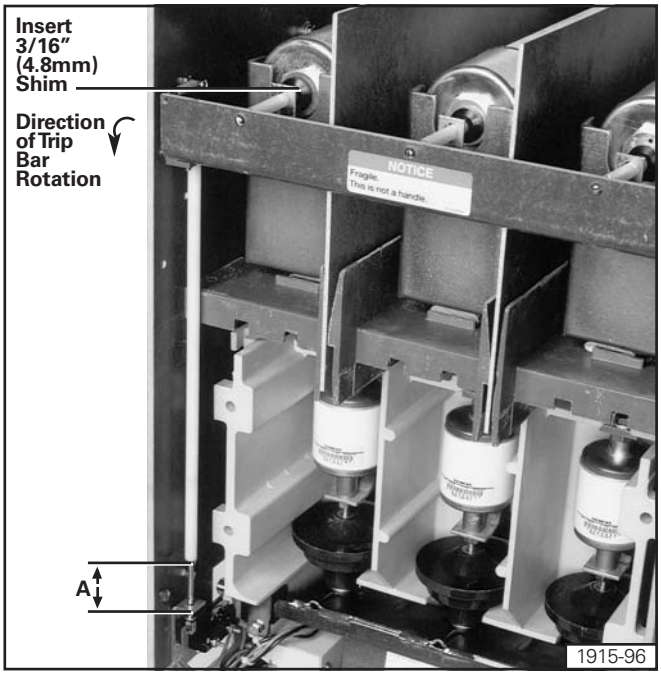

Figure 9. Operational Check of Trip Mechanism

⚠ DANGER

Hazardous voltage.

Will cause death, serious personal injury, or property damage.

Always de-energize and ground the equipment before performing maintenance.

Vacuum Contactor Inspection

The inspections listed in **Table 9** are recommended for the vacuum contactor, whether mounted on a drawout carriage or mounted in a fixed location inside the controller enclosure.

Table 9. Vacuum Contactor Inspection Checklist

Parts to be inspected	Inspection Item	Cracks	Dis-coloration	Contam-ination	Rust	Wear	Loose Parts	Incomplete Operation	Vibrating Sound	Inspection Intervals
Main Circuit	Vacuum Interrupter (Notes 1 & 3)			•	•				•	Visual Check Once a Year or Every 20,000 Operations
	Movable Conductor	•	•							
	Upper & Lower Terminals		•				•			
Mechanism Section	Molded Housing	•	•	•						
	Insulation Flange	•					•			
	Bearing					•	•			
Electro-magnet	Closing Coil		•							
	Armature and Core				•		•			
Latch Mechanism (Note 2)	Trip Coil		•							
	Roller	•				•	•	•		
Mechanical Interlock Check (97H3 Only)	Interlock Bolt and Interlock Arm	•				•	•			
Others	Bolts and Nuts						•			
	Insulated Wire	•								

NOTES:
1. The life expectancy of the electrical parts (vacuum interrupter, auxiliary switch) is 250,000 operations.
2. The life expectancy of the latch mechanism for latched contactors is 100,000 opeations.
3. When the contactor is not protected by current limiting fuses, the vacuum interrupters should be replaced if they have interrupted fault currents at or near their maximum (unfused) interrupting rating.

⚠ DANGER

High Potential tests employ hazardous voltages.

Will cause death or serious personal injury.

Follow safe procedures. Exclude unnecessary personnel. Use safety barriers. Keep away from the equipment during application of test voltages. Dielectric testing should be conducted only by qualified personnel. Refer to dielectric test equipment instructions for safety instructions.

⚠ WARNING

Vacuum interrupters may emit X-radiation.

Can cause serious personal injury.

X-rays can be produced when a high voltage is placed across the open contacts of a vacuum interrupter.

Keep personnel at least three (3) feet from any vacuum interrupter during dielectric tests.

Note: Do not use DC high potential testers incorporating half-wave rectification. These devices produce high peak voltages.

These high voltages will produce X-ray radiation. These devices also show erroneous readings of leakage current when testing vacuum interrupters.

Main Contact Inspection

1. Check the upper and lower flanges and interrupter shaft for signs of contamination or corrosion. If there is contamination, use a clean cloth and rubbing alcohol to clean. If there is corrosion, replace with a new interrupter.
2. With the vacuum interrupter closed, check the amount of main contact wear in the vacuum interrupter. Observe the erosion mark on the lower moving stem of the interrupter. This mark should be visible with the contactor closed. If the mark is not visible, the allowable contact wear has been exceeded, and the interrupter must be replaced.

3. Check the vacuum interrupter for integrity of the vacuum. With the contactor open, apply 18kV AC between the upper and lower terminals for one minute. If the interrupter withstands this test, it is acceptable. If voltage breakdown occurs, the interrupter must be replaced.

⚠ DANGER

Hazardous voltage.

Will cause death, serious personal injury, or property damage.

Always de-energize and ground the equipment before performing maintenance.

Closing coil
Check the main closing coils for signs of discoloration. Discoloration and/or burnt insulation indicates that overheating has occurred, and replacement of the magnet coils is necessary.

Latch Mechanism (Latched Contactor Only)
Check that the holding latch reliably engages. (To manually close the contactor, hold the central area of the rotating shaft with a wrench and operate.) Check the condition of the latch roller. It should be smooth.

Mechanical Interlock Arm (97H3 only)
Check the height of the interlock arm bolt head as shown in **Figure 10**, and lubricate the bolt head once per year or every 20,000 operations. Lubricant used should be Siemens contact lubricant, part no. 15-171-370-002 or Anderol 732, part no. 15-172-816-058. **NOTE:** Slight wear of the bolt head is normal. If replacement of the interlock bolt is necessary, do not replace with a standard bolt of the same size. Use only replacement bolt 25-154-488-155 available from Siemens.

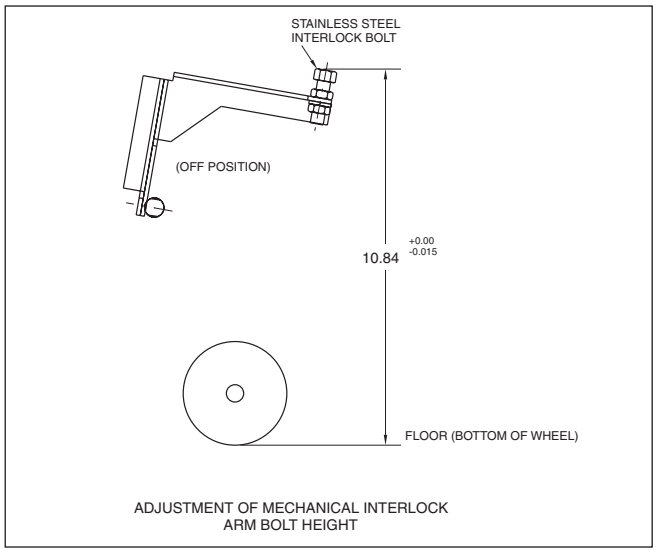

Figure 10. Adjustment of Mechanical Interlock Arm Bolt Height

Fuse Clip Inspection
Closely examine fuse clips. If there is any sign of overheating or looseness check the spring pressure or tightness of clamps. Replace the fuse clips if the spring pressure compares unfavorably with that of other similar fuse clips. Make sure that fuses are completely inserted.

Terminals and Joints
If joints or terminations appear too badly discolored, corroded or pitted, or show evidence of having been subjected to high temperature, the parts should be disassembled and replaced or cleaned.

Examine all wire or cable connections for evidence of looseness or overheating. Re-torque if necessary. If major discoloration or cable damage is apparent, replace the damaged parts.

Periodic Cleaning
Accumulation of dust and foreign material such as coal dust, cement dust, or lamp black must be removed from the contactor and all surfaces must be wiped clean at regular intervals. Dirty, wet or contaminated parts should be replaced unless they can be cleaned effectively. Dust can collect moisture, causing voltage breakdown. Do not use compressed air as it will only redistribute contaminants on other surfaces, and may damage delicate parts.

Dielectric Test
Perform dielectric tests as discussed under "Electrical Connections" in the **Installation** section of this manual.

Recommended Torque
When making bolted assemblies, the following considerations should be generally followed. The recommended torque is determined by the size of hardware used. Refer to **Table 10**.

1. Metal-to-Metal - Apply standard torque as listed.
2. Metal-to-Insert molded in compound part - Apply approximately 2/3 of standard torque.
3. Compound-to-Insert molded in compound part - Apply approximately 1/2 of standard torque.
4. Compound-to-Compound - Apply approximately 1/2 of standard torque.

Table 10. Recommended Torque Values

Thread Size	Standard Torque Metal-to-Metal (in-lbs/Nm)	2/3 Standard Torque Metal-to-Insert (in-lbs/Nm)	1/2 Standard Torque Compound-to-Insert (in-lbs/Nm)	1/2 Standard Torque Compound-to-Compound (in-lbs/Nm)
8-32	14-20/1.6-2.3	10-14/1.0-1.6	7-10/0.8-1.2	7-10/0.8-1.2
10-32	20-30/2.3-3.4	13-20/1.6-2.3	10-15/1.2-1.8	10-15/1.2-1.8
1/4-20	40-60/4.5-6.8	26-40/3.2-4.5	20-30/2.3-3.4	20-30/2.3-3.4
5/16-18	168-228/19-25.8	110-150/12.4-17	84-114/9.5-13	84-114/9.5-13
3/8-16	240-360/27-41	160-240/18-27	120-180/13.5-20.5	120-180/13.5-20.5
1/2-13	480-600/54-68	320-400/36-45	240-300/27-34	240-300/27-34

Vacuum Interrupter Replacement Procedure

When a vacuum interrupter has reached a specified life (250,000 operations) or when it is damaged, it is recommended that it be replaced. If the contactor is not protected by current limiting fuses, the vacuum interrupters should be replaced if they have interrupted fault currents at or near their maximum (unfused) interrupting rating.

The replacement vacuum interrupter kit (serial no. 31670936 and up) consists of a vacuum interrupter (4.1), a flexible shunt connector (5), contact washers (4.3.1, 5.3 and 6.1), and an adjusting tool.

The replacement vacuum interrupter kit (up to serial no. 31670935) consists of a vacuum interrupter (4.1), flexible shunt connector and insulator assembly as well as washer (4.4.4), and spring (4.4.3), spacer tube (4.4.5), washer (4.4.6), lockwasher (4.4.7), nut (4.4.2), contact washers (6.1 and 5.3), and an adjusting tool.

The replacement of vacuum interrupters should be performed as follows:

⚠DANGER

Hazardous voltages.

Will cause shock, burn or electrocution.

Before replacing vacuum interrupters, remove the contactor from the controller compartment to ensure that all high voltage sources are disconnected.

Low voltage test power is required during the re-installation of new vacuum interrupters, so exercise caution.

Removing the Interrupter (Serial no. 31670936 and up)

1. (Refer to **Figure 11**.) Loosen the M8 hex head bolt (5.1) which secures the flexible shunt connection to the contactor housing, and remove.
2. Loosen and remove the M8 nut (4.4.2), holding the movable contact (4.1.1) of the vacuum interrupter with an open end 17mm wrench to avoid damage to the interrupter bellows.
3. Remove two M5 hex head bolts (4.2.1) and remove latch (4.2.3).
4. Loosen and remove M8 hex head bolt (6.2) of upper terminal.
5. Remove vacuum interrupter and attached components from the contactor housing.
6. Loosen locknut (4.3.2), holding the movable contact (4.1.1) of the vacuum interrupter with an open end 17mm wrench to avoid damage to the interrupter bellows.
7. Unscrew the insulator (4.4) from the movable contact (4.1.1).

All of the parts removed should be retained, as they will be reused in the new assembly, except for the following items: vacuum interrupter (4.1), flexible shunt connector (5), contact washers (6.1, 5.3 and 4.3.1), and lockwasher (4.4.7).

Removing the Interrupter (Up to serial no 31670935)

1. (Refer to **Figure 11**.) Loosen the M8 hex head bolt (5.1) which secures the flexible shunt connection to the contactor housing, and remove.
2. Loosen and remove the M8 nut (4.4.1), holding the movable contact (4.1.1) of the vacuum interrupter with an open end 17mm wrench to avoid damage to the interrupter bellows.
3. Loosen and remove the M8 nut (4.4.2), while continuing to hold the movable contact (4.1.1) of the vacuum interrupter to prevent bellows damage.
4. Remove two M5 hex head bolts (4.2.1) and remove latch (4.2.3).
5. Loosen and remove M8 hex head bolt (6.2) of upper terminal.
6. Remove vacuum interrupter and attached components from the contactor housing.

Retain following parts for reuse: bolts (6.2, 5.1 and 4.2.1), washers (4.2.2 and 5.2), nut (5.4) and latch (4.2.3).

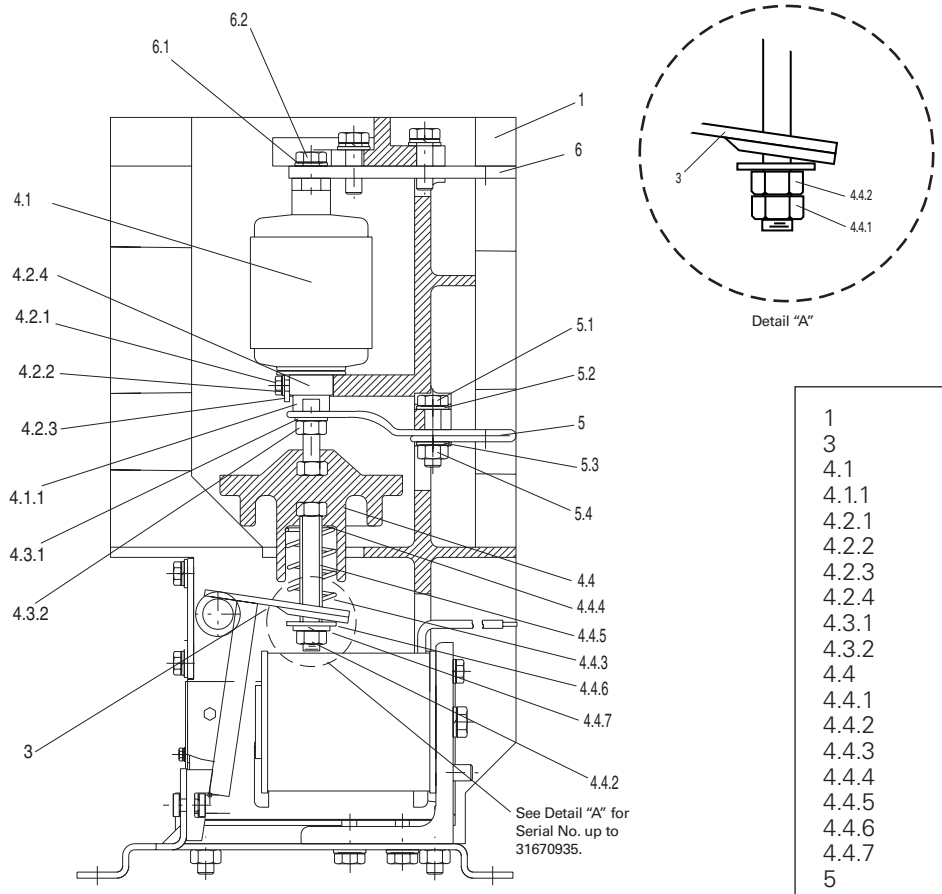

1	Contactor housing
3	Drive lever
4.1	Vacuum interrupter
4.1.1	Movable contact
4.2.1	Hex head bolt (M5)
4.2.2	Washer
4.2.3	Latch
4.2.4	Bearing
4.3.1	Contact washer
4.3.2	Nut
4.4	Insulator
4.4.1	Locknut
4.4.2	Nut
4.4.3	Compression spring
4.4.4	Washer
4.4.5	Spacer tube
4.4.6	Washer
4.4.7	Lockwasher
5	Flexible shunt connector
5.1	Hex head bolt (M8)
5.2	Washer
5.3	Contact washer
5.4	Nut
6	Upper terminal
6.1	Contact washer
6.2	Hex head bolt (M8)

Figure 11. Vacuum Interrupter Removal and Installation

Installing the New Interrupter (Serial no. 31670936 and up)

1. (Refer to **Figures 11** and **12**) Screw locknut (4.3.2) and contact washer (4.3.1) onto insulator (4.4), slip flexible shunt connector (5) onto articulated bolt on the upper end of the insulator (4.4), slip bearing (4.2.4) onto movable contact (4.1.1) of vacuum interrupter (4.1).
2. Screw vacuum interrupter (4.1) onto articulated bolt on the upper end of the insulator (4.4).
3. Preset assembly to size (16 to 16.5mm) as shown in **Figure 12**, and secure it in correct adjustment using nut (4.3.2). Do not fully tighten nut (4.3.2) at this time. Nut (4.3.2) will be fully tightened in final position during the "Drive Connection and Adjustment" procedure.
4. Slip washer (4.4.4), spacer tube (4.4.5) and compression spring (4.4.3) onto lower articulated bolt of insulator (4.4)
5. Insert assembly into contactor housing (1), while passing lower articulated bolt through drive lever (3) and flexible shunt connector (5) through the opening in the rear of the housing (1).
6. Install latch (4.2.3) with hex head bolt M5 (4.2.1) and washer (4.2.2).
7. Secure vacuum interrupter (4.1) to the upper terminal (6), using hex head bolt M8 (6.2) and contact washer (6.1).
8. Secure flexible shunt connector (5) to housing using hex head bolt M8 (5.1), washer (5.2), nut (5.4) and contact washer (5.3). Torque to 10-14 Nm (88-124 in-lbs.).

Installing the New Interrupter (Up to serial no. 31670935)

Follow the procedure in the preceding section, steps 4-8. Steps 1-3 are not required as the replacement kit includes a preset assembly comprised of the vacuum interrupter (4.1), flexible shunt connector (5), and insulator (4.4).

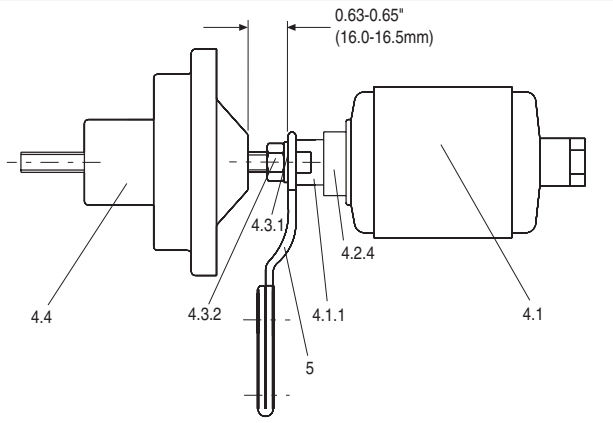

4.1	Vacuum interrupter	4.3.2	Nut
4.1.1	Movable contact	4.4	Insulator
4.2.4	Bearing	5	Flexible shunt connector
4.3.1	Washer		

Figure 12. Adjusting of Insulator to Flexible Shunt Distance

⚠WARNING

Hazardous voltage.

Can cause shock, burn or electrocution.

Adjustment of the connection from the lower end of the insulator (4.4) to the drive arm (3) requires that the contactor main coils be energized at rated control power.

Properly shield any energized parts so that they cannot be touched.

Drive Connection and Adjustment (Refer to Figure 11)

1. From the rear of the contactor, install washers (4.4.6, 4.4.7) and nut (4.4.2) onto the articulated bolt on the lower end of the insulator (4.4).
2. Energize contactor at rated control power. Tighten nut (4.4.2) and torque to 13-17 Nm (114-150 in-lbs) while holding the movable contact (4.1.1) of vacuum interrupter with an open end 17mm wrench to avoid damage to the interrupter bellows.
3. Tighten bolt (6.2) and torque to 13-17 Nm (114-150 in-lbs) to the upper terminal.
4. Insert adjusting handle between drive lever (3) and washer (4.4.6) and adjust insulator (4.4) so that the gap between drive lever (3) and washer (4.4.6) is the same as the adjusting handle. Secure the insulator (4.4) by tightening the nut (4.3.2) to 13-17 Nm (114-150 in-lbs) while holding the movable contact (4.1.1) of vacuum interrupter with an open end 17mm wrench to avoid damage to the interrupter bellows.
5. Remove the adjusting handle.
5. Using control power, operate the contactor on and off approximately 20 times to confirm normal operation.

⚠DANGER

Hazardous voltage.

Will cause death, serious personal injury, or property damage.

Always de-energize and ground the equipment before performing maintenance.

Mechanical Latch Replacement

The mechanical latch is designed for operation from a DC control power source, or from a rectified AC source, or from a capacitor energy storage device supplying DC energy from a rectified AC source. To replace the mechanical latch, remove the drawout contactor carriage from the controller enclosure, and disconnect all sources of power. Remove the auxiliary trip lever (see **Figure 3**) to identify auxiliary trip lever components. The installation procedure for the replacement mechanical latch is as follows (refer to **Figure 13**):

1. For units with AC latching coil, attach the rectifier module (9) to the thrust plate (2) using two M3 x 20 screws (9.1) tightened to 4.5-6.0 in-lbs (0.5-0.7 Nm). For DC latching coil, skip this step.
2. Attach latching coil (1.1) and magnet core (1.2) to thrust plate (2) with M6 x 35 screw (1.3). Torque to 62-79 in-lbs (7-9Nm).
3. Attach latch stop (3) to drive lever (4) with two M5 x 30 screws (4.1). Torque to 48-57 in-lbs (5.5-6.5 Nm).
4. Insert compression spring (5) into magnet core (1.2).
5. Attach the frame and latch assembly (6) to the thrust plate (2) with four M5 x 16 screws (6.1).
6. To continue the installation, the contactor must be closed. This requires application of control power to the main coil. Use appropriate precautions to avoid injury or shock when control power is applied to the contactor.
7. Apply control power and switch the contactor to the closed (ON) position.
8. While the contactor is closed, insert a spacer (A) between the magnet plate and the stop, as shown in **Figure 14**. The spacer is made of insulating material, and is approximately 10.5mm x 25mm x 180mm.
9. After the spacer has been inserted, switch the control power off. The spacer should maintain the contactor in the closed (ON) position.
10. Insert the adjusting plate (7) 0.2mm thick between the latch stop (3) and the latching pin (6.3).
11. Tighten the four M5 x 16 screws which fasten the frame and latch assembly (6) to the thrust plate (2). Torque to 48-57 in-lbs (5.5-6.5 Nm).
12. Remove the adjusting plate (7).
13. Attach the control leads (1.4) to the correct terminals in accordance with the schematic diagram for the controller.
14. Attach the auxiliary trip lever. Adjust the location of the auxiliary trip lever so that it is touching the actuator but not pressing it in. Apply a thin coat of lubricant (Siemens contact lubricant, part no. 15-171-370-002 or Anderol 732, part no. 15-172-816-058) to the lever on the door where it meets the auxiliary trip lever.
15. (Mechanical trials) Reapply control power to the main coil to close the contactor. The mechanical latch should correctly latch and hold the contactor in the closed (ON) position after control power is removed from the main coil. A gap of 1.4mm (0.055 in) between delatching lever (7.3) and return spring (7.4) holding pin is preset at the factory. Verify this dimension if contactor does not properly latch. Adjust actuator or auxiliary trip lever mounting location as needed. See **Figure 3** to identify actuator, auxiliary trip lever, and other latch components. If this condition is satisfied, next, mechanically (manually) operate the actuator and verify that the contactor opens. Repeat this sequence of tests approximately 20 times to verify correct operation.

16. (Electrical trials) Reapply control power to the main coil to close the contactor. The mechanical latch should correctly latch and hold the contactor in the closed (ON) position after control power is removed from the main coil. If this condition is satisfied, next, apply the correct control power voltage for the mechanical latch trip coil (often different from the main coil control power voltage). Control power should be applied to the mechanical latch trip coil for at least 0.1 second, but not for longer than one second, or damage to the mechanical latch trip coil will result. Verify that the contactor opens when the mechanical latch is operated electrically. Repeat this sequence of tests approximately 20 times to verify correct operation.

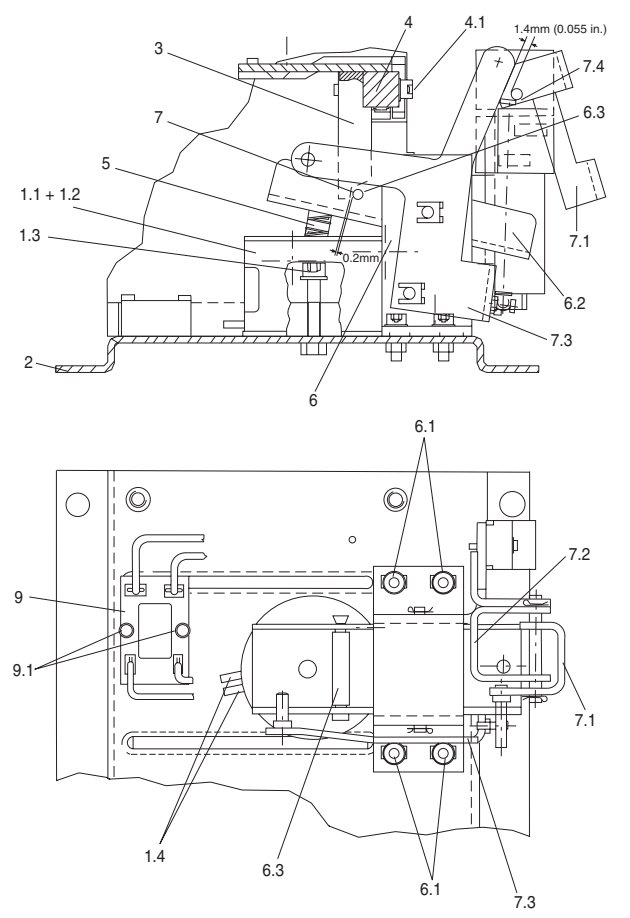

1.1	Latching coil	6.1	M5 x 16 screw
1.2	Magnet core	6.2	Latch
1.3	M6 x 35 screw	6.3	Latch pin
1.4	Latching coil leads	7	Adjusting plate
2	Thrust plate	7.1	Actuator
3	Latch stop	7.2	Actuator support
4	Drive lever	7.3	Delatching (trip) lever
4.1	M5 x 16 screw	7.4	Return spring
5	Compression spring	9	Rectifier module 3AX1525-0F
6	Frame	9.1	M3 x 20 screw

Figure 13. Mechanical Latch Installation

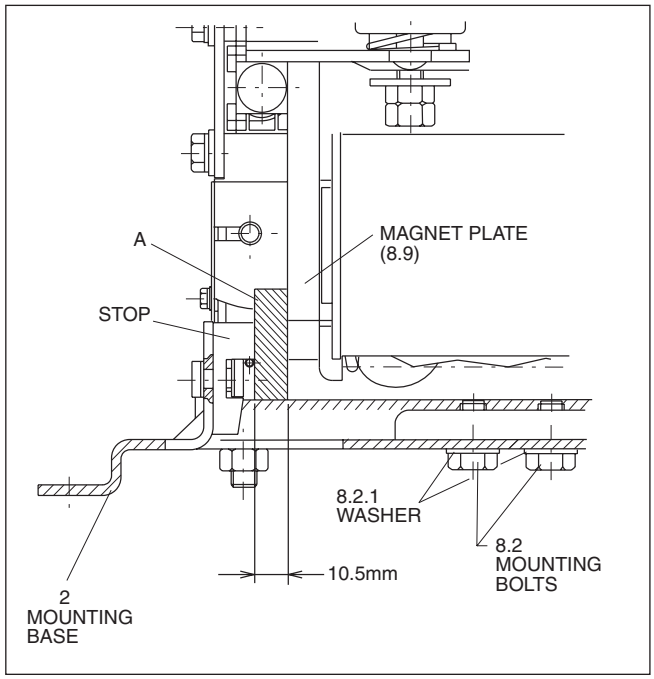

Figure 14. Use of Spacer to Maintain Contactor Closed Position During Mechanical Latch Installation

⚠DANGER

Hazardous voltage.

Will cause death, serious personal injury, or property damage.

Always de-energize and ground the equipment before performing maintenance.

Main (Magnet) Coil Replacement

The magnet coil configuration employs a pair of magnet coils for each contactor. If it should become necessary to replace either of the magnet coils, replace both coils as a set. To replace the magnet coils, remove the drawout contactor carriage from the controller enclosure, and disconnect all sources of power. For non-drawout type contactors, disconnect and ground all sources of power, and remove the contactor from the enclosure. The replacement procedure is as follows (refer to **Figure 15**)

1. (Removal of the magnet coils) Disconnect the leads of the magnet coils (8.1).
2. Remove the mounting bolts (8.2) which secure the magnet system (8) to the contactor mounting base (2). (Note, on early model drawout contactors, holes to allow access to the mounting bolts (8.2) are not provided. If access holes are not present, contact Siemens Field Service at 1-800-241-4453 for assistance in replacing main magnet coils).
3. Remove the magnet system (8) from the contactor by sliding the assembly out the rear of the contactor.
4. Do not loosen or adjust items 8.10, 8.11, 8.12, or 8.13.
5. Remove the bolts (8.3) at the rear side of the magnet angle (8.4).
6. Loosen, but do not remove, plate (8.7).
7. Remove the mounting bolt (8.5) at the rear side of the magnet angle (8.4).

8. Note, the washer (8.8) mounted between the magnet core (8.6) and the magnet angle (8.4) is needed for installing the new magnet coil. There is one washer (8.8) per magnet coil.
9. The magnet core (8.6) is also to be reused.
10. Washers (8.3.1), (8.2.1), and (8.5.1) should be discarded and replaced with the new washers in the replacement magnet coil kit.
11. (Replacing the magnet coils) Install the new magnet coils (8.1), reversing the action in the previous step. Install each magnet coil over the magnet core (8.6) on the magnet angle (8.4), using bolt (8.5), new washer (8.5.1), and washer (8.8). Torque to 157-192 in-lbs (18-22 Nm).
12. Align the magnet coils (8.1) into correct position so that the magnet core (8.6) is free to move, and secure the magnet coils (8.1) in position using plate (7). Torque to 39-48 in-lbs (4.5-5.5 Nm).
13. Install bolts (8.3) with new washers (8.3.1). Torque to 157-192 in-lbs (18-22 Nm).
14. Slide the magnet system (8) into the contactor from the rear.
15. Secure the magnet system (8) to the contactor mounting base (2) using bolts (8.2) and new washers (8.2.1). Tighten loosely, but allow some movement between the magnet system (8) and the contactor mounting base (2).
16. Connect the leads from the new magnet coils (8.1) to the correct terminals on the contactor.
17. To continue the installation, the contactor must be closed. This requires application of control power to the main coil. Use appropriate precautions to avoid injury or shock when control power is applied to the contactor.
18. (Alignment) Apply control power and switch the contactor to the closed (ON) position. The contactor should close correctly, and the closing process will cause the magnet system (8) to properly align with the magnet plate (8.9).
19. While the contactor is closed, torque the mounting bolts (8.2) to 157-192 in-lbs (18-22 Nm). While tightening the mounting bolts, assure that proper alignment between the magnet system (8) and the magnet plate (8.9) is maintained.
20. (Electrical trials) Apply control power and switch the contactor to the closed (ON) position. The contactor should close correctly and without unusual hesitation. Verify that the contactor opens when the control power is removed. Repeat this test approximately 20 times to verify correct operation.

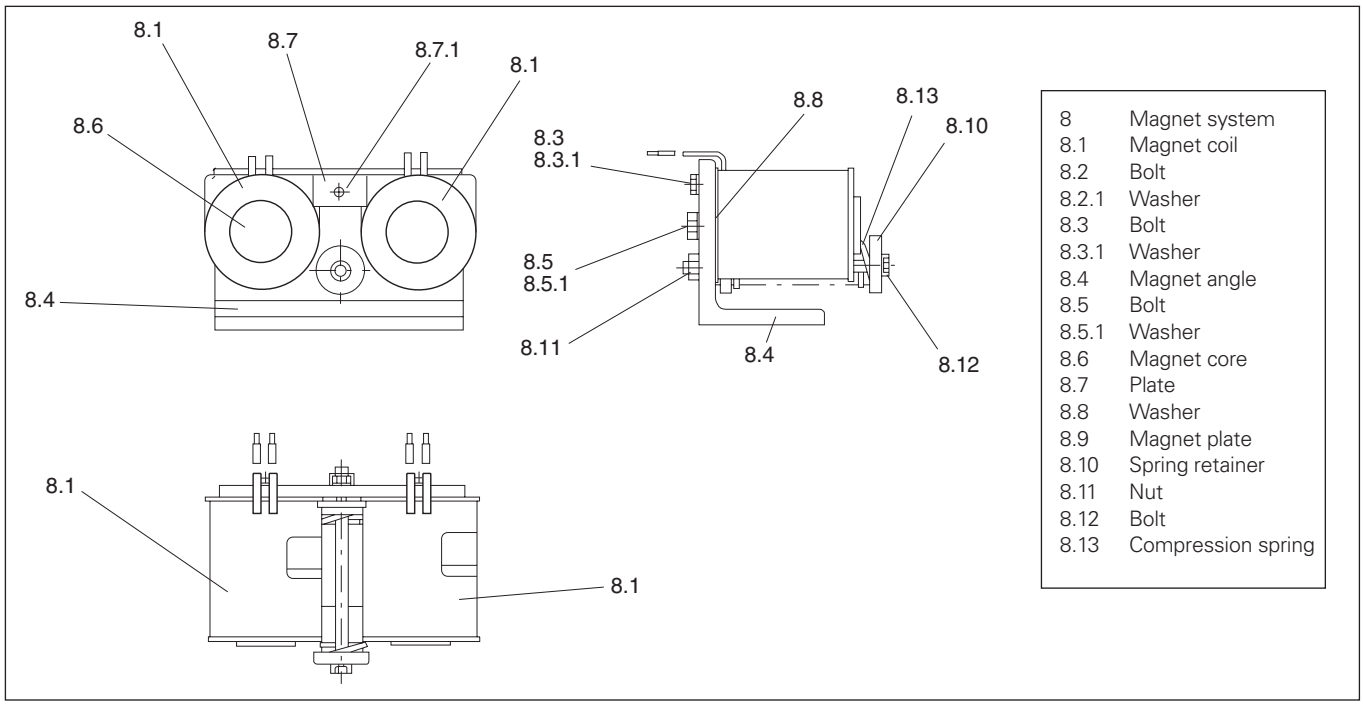

Figure 15. Main Magnet Coil Replacement

⚠DANGER

Hazardous voltage.

Will cause death, serious personal injury, or property damage.

Always de-energize and ground the equipment before performing maintenance.

Auxiliary Switch Replacement

To replace the auxiliary switch blocks, remove the drawout contactor carriage from the controller enclosure, and disconnect all sources of power. The procedure for replacement of auxiliary switch blocks is as follows (refer to **Figure 16**):

1. Remove screw (3) from the actuator arm, so that the arm is free to rotate.
2. Remove the screws which secure the auxiliary switch blocks to the contactor housing (1). There are four screws. The drawout contactor carriage side barrier has holes to allow for access to these screws without major disassembly of the contactor carriage. Three of the screws can be

accessed directly, while the fourth screw can be accessed by rotating the actuator arm (7).

3. Slide the auxiliary switch blocks out towards the rear of the drawout carriage, keeping the wires attached to the auxiliary switch blocks.
4. Once the auxiliary switch blocks and attached wiring are accessible, mark the wires and note the relationship between each wire and its associated auxiliary switch terminal. Remove the wires from the auxiliary switch block.
5. Reinstall the wires to the new switch block. Note that the lower auxiliary switch block (10.2) differs from the upper auxiliary switch block (10.1). Be sure that the wires are attached to the correct terminals of the correct auxiliary switch block.
6. When all wires are properly secured, slide the auxiliary switch blocks with the wires attached into the proper location on the contactor drawout carriage, and align the auxiliary switch blocks to the mounting holes in the contactor housing (1).
7. Install lower auxiliary switch block (10.2) to the lower position on the contactor housing (1) using M3 x 35 screws. To install one of the screws, it will be necessary to rotate the actuator arm (7).
8. Install upper auxiliary switch block (10.1) to the upper position on the contactor housing (1) using M3 x 35 screws.
9. Reposition the actuator arm (7) and secure it to the shaft with screw (3), and torque to 5.5-6.5 Nm (96-114 in-lbs).
10. To continue the installation, the contactor must be closed. This requires application of control power to the main coil. Use appropriate precautions to avoid injury or shock when control power is applied to the contactor.
11. (Electrical trials) Apply control power and switch the contactor to the closed (ON) position. The contactor should close correctly and without unusual hesitation. Verify that the contactor opens when the control power is removed. Using auxiliary contacts which are not connected to control power, verify that auxiliary contacts (NO) which are to be closed when the contactor is closed are closed. Similarly, these contacts should be open when the contactor is open. Similarly verify that NC contacts are closed when the contactor is open, and are open when the contactor is closed. Operate the contactor approximately 20 times, and then reverify auxiliary contact condition.

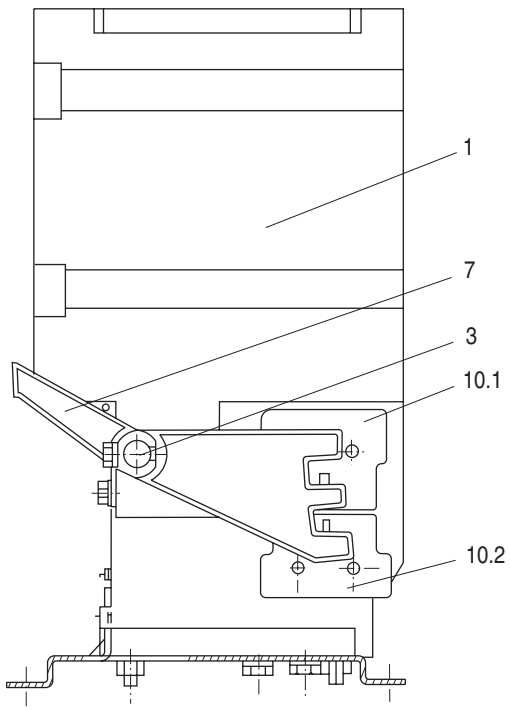

1	Contactor housing
3	Actuator arm bolt
7	Actuator arm
10.1	Upper auxiliary switch block
10.2	Lower auxiliary switch block

Figure 16. Auxiliary Switch Block Replacement

⚠ DANGER

Hazardous voltage.

Will cause death, serious personal injury, or property damage.

Always de-energize and ground the equipment before performing maintenance.

Electronic Economizer Replacement

To replace the electronic economizer assembly, remove the drawout contactor carriage from the controller enclosure, and disconnect all sources of power. For non-drawout type contactors, disconnect and ground all sources of power, and (if needed) remove the contactor from the enclosure. The replacement procedure is as follows (refer to **Figure 17**):

1. Disconnect the magnet coil (8.1) from the terminals of the electronic economizer.
2. Remove the screw (11.2) which secures the cover (11.1) to the electronic economizer assembly housing.
3. Cover (11.1) will be retained and reused.
4. Remove the screws (11.3) which secure the electronic economizer (11) in the housing, and remove the electronic economizer (11) from the housing.

5. Install the new electronic economizer in reverse sequence.
6. To continue the installation, the contactor must be closed. This requires application of control power to the main coil. Use appropriate precautions to avoid injury or shock when control power is applied to the contactor.
7. (Electrical trials) Apply control power and switch the contactor to the closed (ON) position. The contactor should close correctly and without unusual hesitation. Verify that the contactor opens when the control power is removed. Operate the contactor approximately 20 times to verify correct installation and operation.

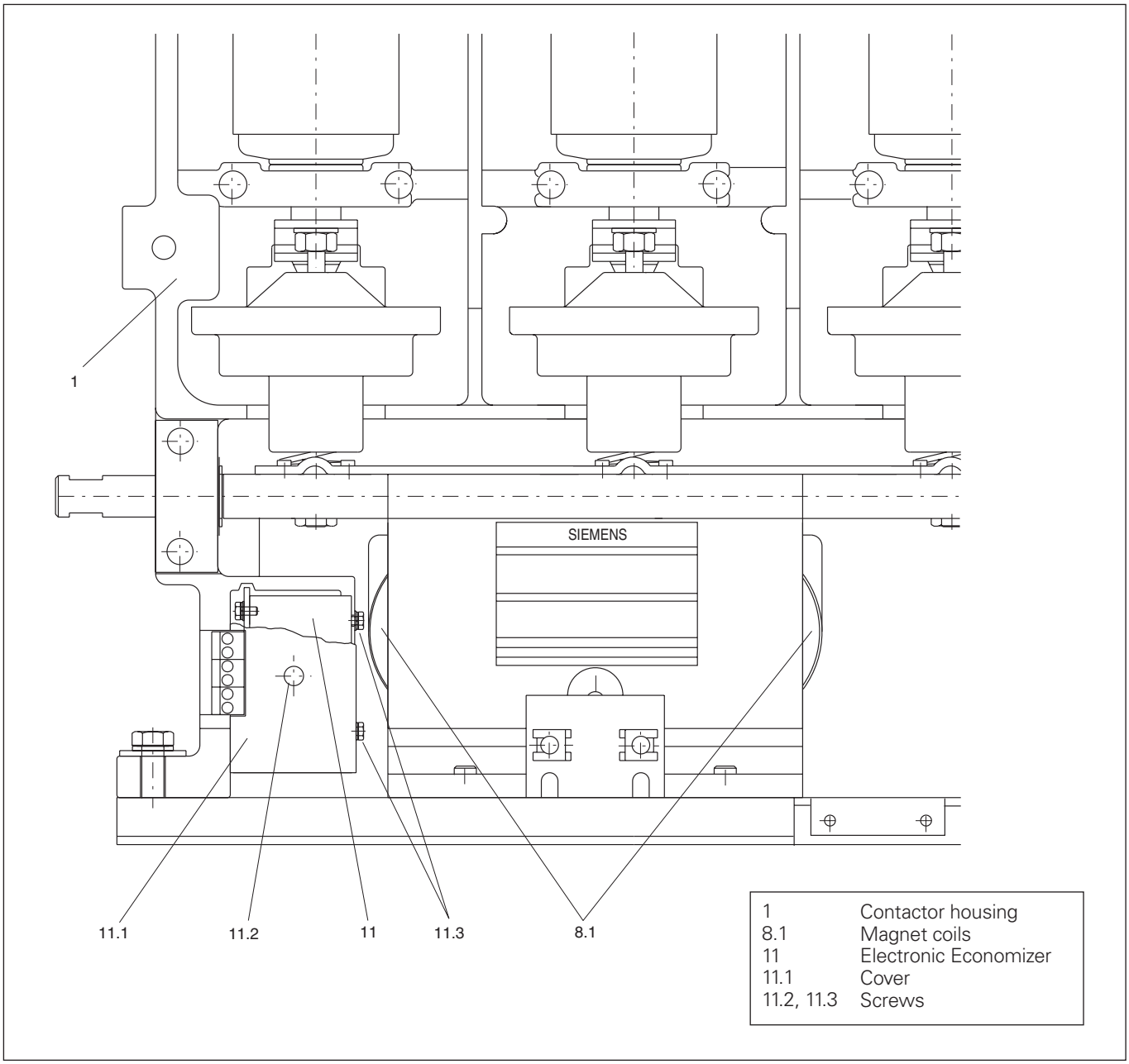

Figure 17. Electronic Economizer Replacement

Maintenance After a Fault

⚠ DANGER

Hazardous voltages.

Will cause death, serious personal injury, or property damage.

Disconnect, lockout, and ground incoming power and control voltage sources before beginning work on this or any other electrical equipment.

Maintenance should be performed only by qualified personnel.

Introduction
Before performing any maintenance:

- Test all power terminals to verify that incoming power has been disconnected. Use only approved high voltage test equipment to check voltage on power terminals. **Do not attempt to measure high voltage (over 600 volts) with a volt-ohm meter.**
- Check all control and secondary circuit terminals with a voltmeter to make certain that all sources of incoming control and secondary voltage have been disconnected.
- Connect safety grounds to power terminals after the system has been de-energized, and prior to working on the equipment.
- Perform all disconnecting, grounding, and lockout operations in accordance with established safety procedures.
- Follow the procedure outlined in the Pre-Energization Check section of this manual before power is restored.

General
The excessive currents occurring during a fault may result in structure, component and/or conductor damage due to mechanical distortion, thermal damage, metal deposits, or smoke. After a fault, repair the cause of the fault, inspect all equipment per NEMA Standards Publication No. ICS2 Annex A and make any necessary repairs or replacements prior to placing the equipment into service again. Be sure that all replacements (if any) are of the proper rating and are suitable for the application. If in doubt, consult your Siemens representative.

Inspection
The following areas should be inspected after a fault has occurred.

Enclosures
External evidence of enclosure deformation usually is indicative of damage within. Extensive damage will require replacement of the enclosure parts and the enclosed equipment. Insure that door mounted equipment and safety interlocks function properly. Verify that hinge and latch integrity is maintained.

Terminals and Internal Conductors
Replace all damaged parts which show evidence of discoloration, melting or arcing damage. Special attention should be paid to the stab (disconnect) fingers.

Overload Relays
The complete overload relay must be replaced if burnout of the heater element has occurred. Any indication of an arc striking or burning the overload relay also requires replacement of the relay.

If there is no visual indication of damage that would require replacement, contact operation must be verified by electrically or mechanically tripping and resetting the overload relay.

Fuse Holders
Replace fuse holders if the insulation mounts, barriers, or fuse clips show signs of damage, deterioration, heating, distortion or looseness.

Fuses
Always replace all three fuses in a three phase circuit even though only one or two are open circuited since internal damage suffered by fuses not replaced could result in nuisance shut-down later.

Perform the "Pre-Energization Check" procedures detailed in the **Installation** section of this manual before restoring the equipment to service.

Trouble Shooting

In the event that operating problems are encountered, use the troubleshooting chart to isolate the cause of the malfunction and find the remedy. If the corrective action given in the chart fails to correct the difficulty, consult your Siemens representative.

The following information is required if it is necessary to contact Siemens relative to the equipment.

1. Siemens serial number (and part number, if available).
2. Nameplate data on contactor.
3. Duty cycle and any details of operation.
4. Length of time in service and approximate total number of operations.
5. Voltage, current and frequency.
6. Description of problem.
7. Any other pertinent information concerning the problem.

⚠ DANGER

Hazardous voltages.

Will cause shock, burn or electrocution.

Disconnect and lockout all power supplying this equipment except where low voltage control power is required prior to making these checks and exercise extreme caution at all times.

Table 11. Troubleshooting

Phenomenon					Possible Causes	Corrective Action
Will not close	Does Not Open (Latch Type)	Overheated Trip Coil	Over-heated Main Coil	Latch Is Not Engaged	Survey main circuit without voltage Remove all power before inspecting	If inspection and/or corrective action is difficult, inform Siemens immediately
•	•			•	Control power supply voltage is too low	Decrease the voltage drop to increase the voltage to 90% or more of the rating.
•	•	•	•	•	Difference in control voltage	Proper rating
•	•				Defective control circuit	Check connection diagram
•	•			•	Poor connection and/or loose screw	Ensure that the connection is tight
•	•				Bad control switch contact	Clean if contact resistance is too high. Replace if necessary.
•	•			•	Wrong terminal connection	Connect correctly
•				•	Blown power supply fuse	Remove cause of fault and replace
•	•				Disconnected coil	Determine cause and correct
•			•		Faulty electronic economizer or magnet coils	Check the coil current. Replace electronic economizer or magnet coils as needed
•			•	•	Incorrect latch mechanism operation	Energize latch coil and inspect latch hook
•				•	Mechanism jammed	Lubricate corresponding portion or remove cause of jam
		•			Defective auxiliary switch block	Clean or replace
	•				Faulty auxiliary contact	Clean or replace

Table 12. Type 96H35 or 97H35 (5kV) Contactor (Refer to **Figure 18**)

Item	Description	Part Number	Contactor Quantities	
			Drawout	Stationary
1	LH Side Rail	25-154-488-560	1	-
2	RH Side Rail	25-154-488-559	1	-
3	Contactor Mtg. Tray	25-154-521-554	1	-
4	LH Side Plate	25-154-488-558	1	-
5A	RH Side Plate	25-154-488-557	1 (96H3 only)	-
5B	RH Side Plate	25-154-488-598	1 (97H3 only)	-
6	Insulator Molding	25-407-783-005	2	-
7A	CPT Mounting Plate	25-154-488-566	1 (96H3 only)	-
7B	CPT Mounting Plate	25-154-488-595	1 (97H3 only)	-
8	CPT Fuse Block	25-306-331-002	1	-
9	Wheel	18-658-134-345	4	-
10	Wheel Shaft	25-154-301-034	3	-
11	Insulator Molding	25-407-783-001	1	-
12	Copper Spacer	25-131-570-001	6	-
13	Side Support	25-154-488-007	2	-
14	LSI Mounting Bracket	25-154-488-552	1	-
15	Wheel Shaft LH Front	25-154-488-051	1	-
16	Interphase Barrier	25-154-488-010	2	-
17	#8 GA - 5kV Cable	25-131-894-507	1	-
18	#8 GA - 5kV Cable	25-131-894-508	1	-
19	LSI Finger	25-135-753-001	1	-
20	LSI Support	25-154-301-073	1	-
21	Finger Assembly Line	25-131-570-527	3	-
22	Finger Assembly Load	25-131-570-583	3	-
23	CPT Fuse Clip	25-127-244-001	4	-
24	Fuse Clip Assembly Rear	25-135-186-517	1	-
25	Boot for Finger	25-154-488-055	2	-
26	Terminal Block Bracket	25-154-488-008	1	-
27A	Interlock Cable Assembly	25-213-200-843	1 (96H3 only)	-
27B	Interlock Lever	25-213-200-508	1 (97H3 only)	-
28	Copper Bar A phase	25-154-488-268	1	-
29	Copper Bar B phase	25-154-488-269	1	-
30	Copper Bar C phase	25-154-488-270	1	-
31	Copper Bar A phase	25-154-488-266	1	-
32	Copper Bar B phase	25-154-488-001	1	-
33	Copper Bar C phase	25-154-488-267	1	-
34	Contactor Mtg. Angle RH	25-154-521-552	1	-
35	Contactor Mtg. Angle LH	25-154-521-553	1	-
36	Fuse Clip Inner	25-135-228-058	3	-
37	Fuse Clip Outer	25-135-228-059	3	-
38	Vacuum Interrupter Kit	25-154-654-001*	3	-
39	Closing Coil Assembly Kit	25-154-654-002	1	1
40	Aux. Block (Bottom)	25-154-158-006	1	1
41	Aux. Block (Top)	25-154-654-004	1	1
42	Electronic Economizer	25-154-654-003	1	1
44	Cover Plate	25-154-488-128	1 (97H3 only)	-

*Kit 25-154-654-001 for 3TL8 contactor serial number 31670936 and higher. For 3TL8 contactor serial number up to 31670935, use kit 25-154-654-005.

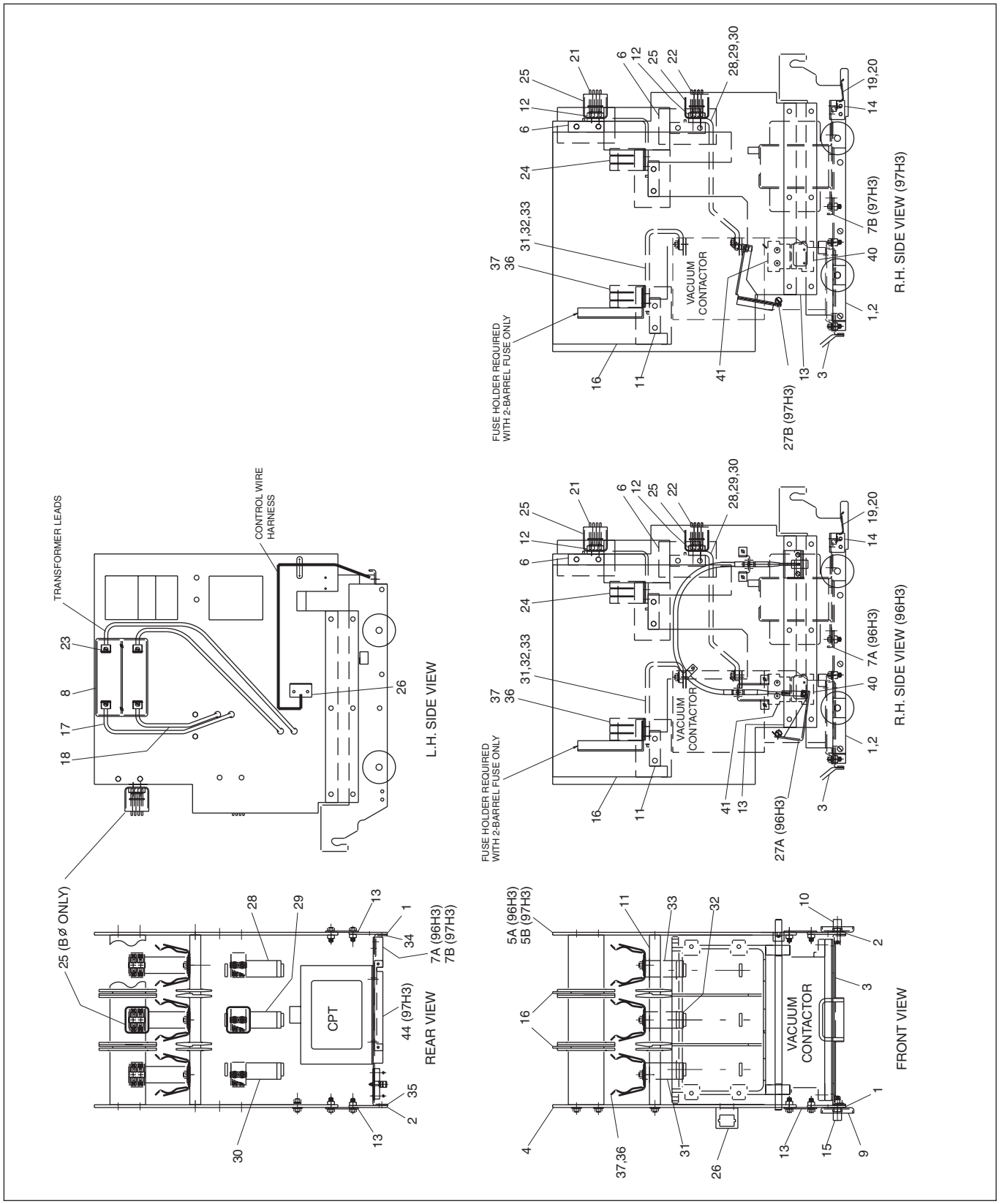

Figure 18. 96H35 or 97H35 Vacuum Contactor (5kV)

Table 13. Type 96H37 or 97H37 (7.2kV) Contactor 18R - 24R fuses (Refer to Figure 19)

Item	Description	Part Number	Contactor Quantities	
			Drawout	Stationary
1	LH Side Rail	25-154-488-560	1	-
2	RH. Side Rail	25-154-488-559	1	-
3	Contactor Mtg. Tray	25-154-521-554	1	-
4	LH Side Plate	25-154-488-571	1	-
5A	RH Side Plate	25-154-488-572	1 (96H3 only)	-
5B	RH Side Plate	25-154-488-598	1 (97H3 only)	-
6	Insulator Molding	25-407-783-005	2	-
7A	CPT Mounting Plate	25-154-488-566	1 (96H3 only)	-
7B	CPT Mounting Plate	25-154-488-595	1 (97H3 only)	-
8	CPT Fuse Block	25-154-247-061	1	-
9	Wheel	18-658-134-345	4	-
10	Wheel Shaft	25-154-301-034	3	-
11	Insulator Molding	25-407-783-001	2	-
12	Copper Spacer	25-131-570-001	6	-
13	Side Support	25-154-488-007	2	-
14	LSI Mounting Bracket	25-154-488-552	1	-
15	Wheel Shaft LH Front	25-154-488-051	1	-
16	Interphase Barrier	25-154-488-081	2	-
17	#8 GA - 7.2kV Cable	25-154-288-503	1	-
18	#8 GA - 7.2kV Cable	25-154-288-504	1	-
19	LSI Finger	25-135-753-001	1	-
20	LSI Support	25-154-301-073	1	-
21	Finger Assembly Line	25-131-570-527	3	-
22	Finger Assembly Load	25-131-570-583	3	-
23	CPT Fuse Clip	25-127-244-001	4	-
24	Copper Bar	25-154-515-509	3	-
25	Boot for Finger	25-154-488-055	2	-
26	Terminal Block Bracket	25-154-488-008	1	-
27A	Interlock Cable Assembly	25-213-200-843	1 (96H3 only)	-
27B	Interlock Lever	25-213-200-508	1 (97H3 only)	-
28	Copper Bar A phase	25-154-521-549	1	-
29	Copper Bar B phase	25-154-521-550	1	-
30	Copper Bar C phase	25-154-521-551	1	-
31	Copper Bar A phase	25-154-515-520	1	-
32	Copper Bar B phase	25-154-515-521	1	-
33	Copper Bar C phase	25-154-515-522	1	-
34	Contactor Mtg. Angle RH	25-154-521-552	1	-
35	Contactor Mtg. Angle LH	25-154-521-553	1	-
36	Copper Bar	25-154-515-505	3	-
40	Vacuum Interrupter Kit	25-154-654-001*	3	1
41	Closing Coil Assembly Kit	25-154-654-002	3	1
42	Aux. Block (Bottom)	25-154-158-006	1	1
43	Aux. Block (Top)	25-154-654-004	1	1
44	Electronic Economizer	25-154-654-003	1	1
46	Cover Plate	25-154-488-128	1 (97H3 only)	–

*Kit 25-154-654-001 for 3TL8 contactor serial number 31670936 and higher. For 3TL8 contactor serial number up to 31670935, use kit 25-154-654-005.

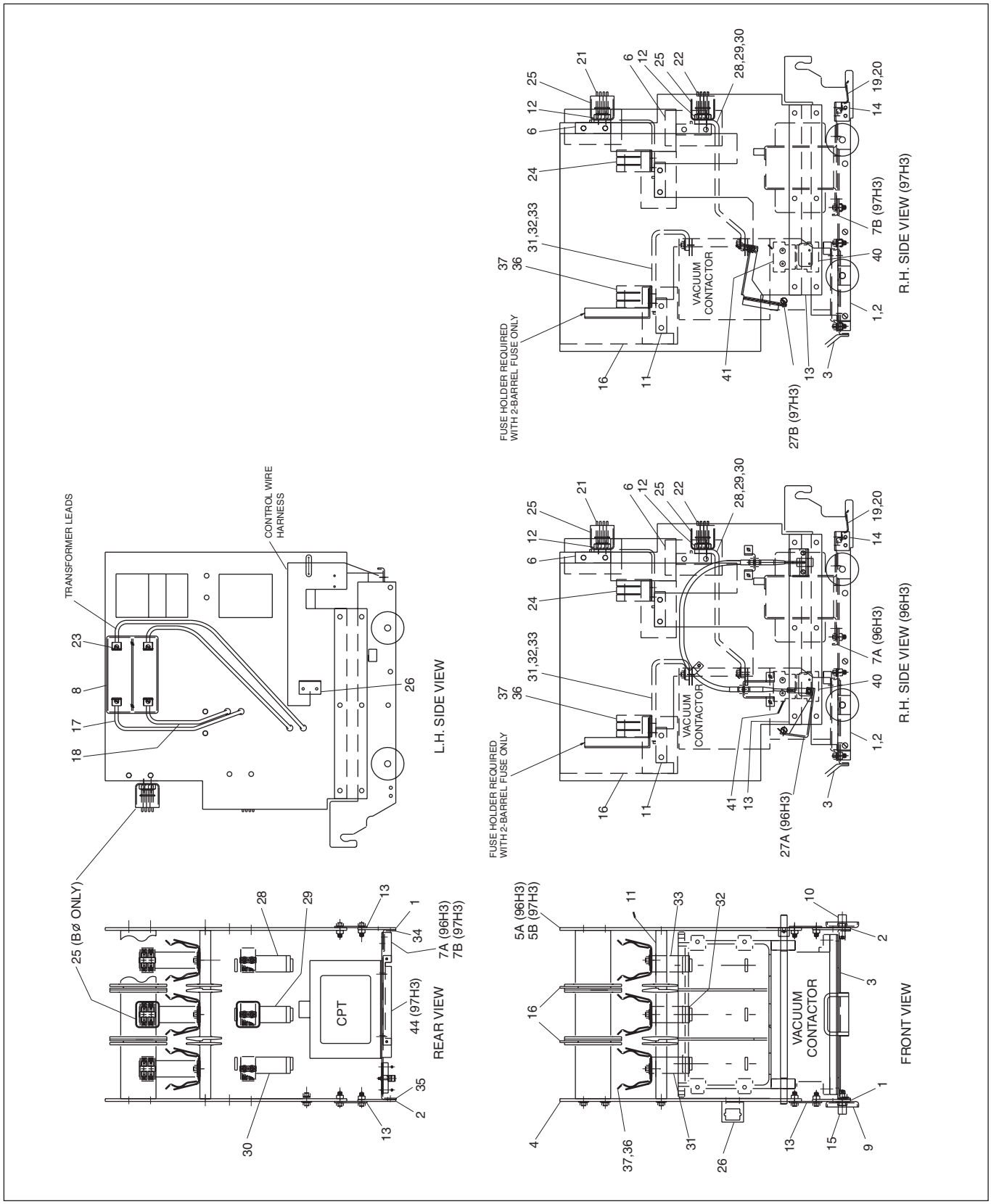

Figure 19. 96H37 or 97H37 Vacuum Contactor (7.2kV with 18R-24R Fuses)

Table 14. Type 96H37 or 97H37 (7.2kV) Contactor 2R - 12R fuses (Refer to Figure 20)

Item	Description	Part Number	Contactor Quantities	
			Drawout	Stationary
1 2	LH Side Rail RH. Side Rail	25-154-488-560 25-154-488-559	1 1	- -
3 4	Contactor Mtg. Tray LH Side Plate	25-154-521-554 25-154-488-587	1 1	- -
5A 5B 6	RH Side Plate RH Side Plate Insulator Molding	25-154-488-557 25-154-488-598 25-407-783-005	1 (96H3 only) 1 (97H3 only) 2	- - -
7A 7B 8	CPT Mounting Plate CPT Mounting Plate CPT Fuse Block Assembly	25-154-488-566 25-154-488-595 25-154-247-061	1 (96H3 only) 1 (97H3 only) 1	- - -
9 10	Wheel Wheel Shaft	18-658-134-345 25-154-301-034	4 3	- -
11 12	Insulator Molding Copper Spacer	25-407-783-001 25-131-570-001	1 6	- -
13 14	Side Support LSI Mounting Bracket	25-154-488-007 25-154-488-552	2 1	- -
15 16	Wheel Shaft LH Front Interphase Barrier	25-154-488-051 25-154-488-010	1 2	- -
17 18	#8 GA - 7.2kV Cable #8 GA - 7.2kV Cable	25-154-288-503 25-154-288-504	1 1	- -
19 20	LSI Finger LSI Support	25-135-753-001 25-154-301-073	1 1	- -
21 22	Finger Assembly Line Finger Assembly Load	25-131-570-527 25-131-570-583	3 3	- -
23 24	CPT Fuse Clip Fuse Clip Assembly Rear	25-127-244-001 25-135-186-517	4 1	- -
25 26	Boot for Finger Terminal Block Bracket	25-154-488-055 25-154-488-008	2 1	- -
27A 27B 28	Interlock Cable Assembly Interlock Lever Copper Bar A phase	25-213-200-843 25-213-200-508 25-154-521-549	1 (96H3 only) 1 (97H3 only) 1	- - -
29 30	Copper Bar B phase Copper Bar C phase	25-154-521-550 25-154-521-551	1 1	- -
31 32	Copper Bar A phase Copper Bar B phase	25-154-488-266 25-154-488-001	1 1	- -
33 34	Copper Bar C phase Contactor Mtg. Angle RH	25-154-488-267 25-154-521-552	1 1	- -
35	Contactor Mtg. Angle LH	25-154-521-553	1	-
37 38	Fuse Clip Inner Fuse Clip Outer	25-135-228-058 25-135-228-059	3 3	- -
40 41	Vacuum Interrupter Kit Closing Coil Assembly Kit	25-154-654-001* 25-154-654-002	3 3	1 1
42 43	Aux. Block (Bottom) Aux. Block (Top)	25-154-158-006 25-154-654-004	1 1	1 1
44 46	Electronic Economizer Cover Plate	25-154-654-003 25-154-488-128	1 1 (97H3 only)	1 -

*Kit 25-154-654-001 for 3TL8 contactor serial number 31670936 and higher. For 3TL8 contactor serial number up to 31670935, use kit 25-154-654-005.

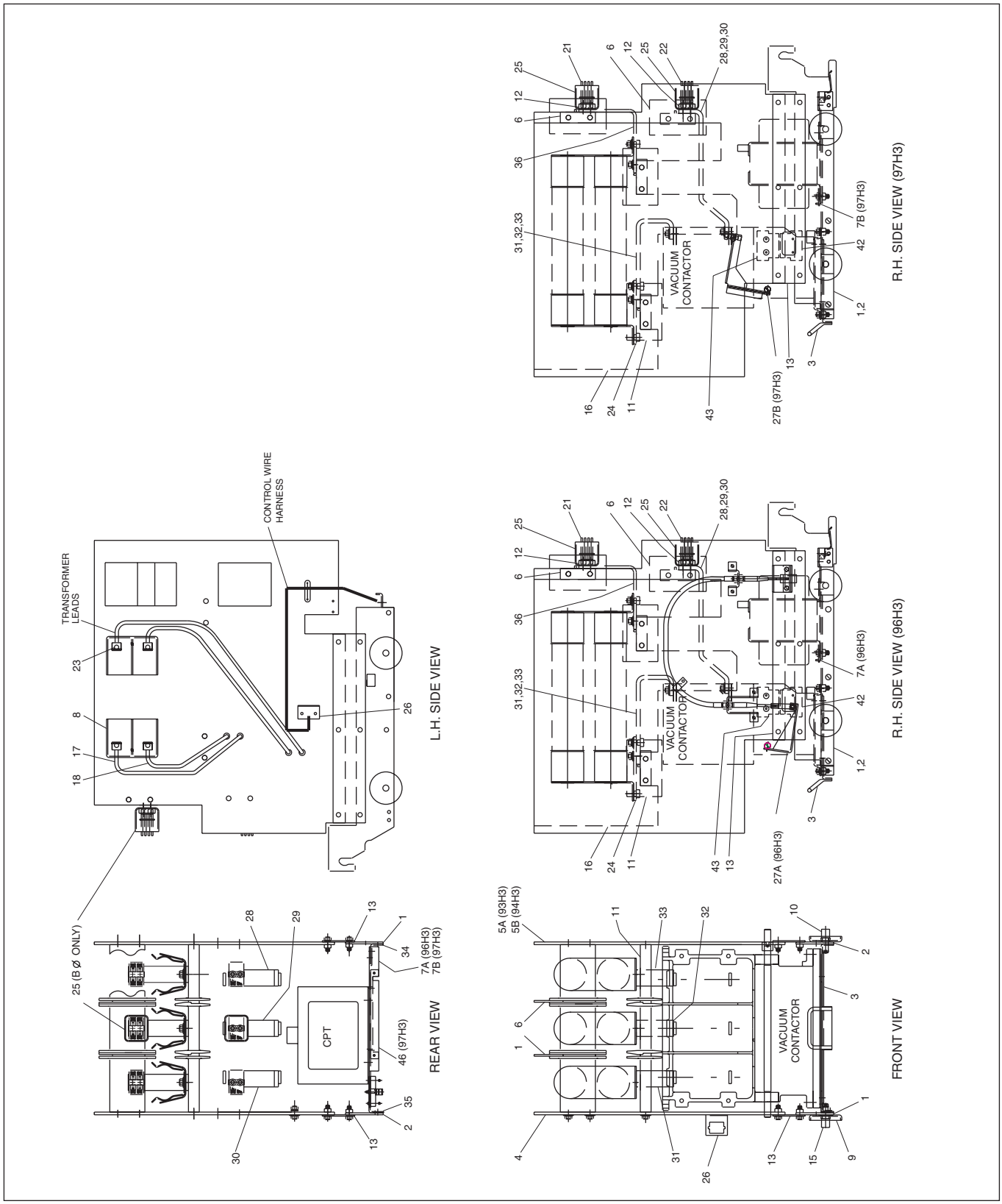

Figure 20. 96H37 or 97H37 Vacuum Contactor (7.2kV with 2R-12R Fuses)

SIEMENS

Siemens Power
Transmission & Distribution, Inc.
P.O. Box 29503
Raleigh, NC 27626-0503

Bulletin SGIM-9088D (supercedes SGIM-9088C) (TDS 1004) Printed in the U.S.A.

© 2004 Siemens Power Transmission & Distribution, Inc.
SIEMENS is a registered trademark of Siemens AG. Series 81000 is a trademark of Siemens Power Transmission & Distribution, Inc.