6035-510A
November 1998
Middletown, OH USA

Instruction Bulletin

DIGITRIP® RMS Trip Units:

DIGITRIP RMS 510, DIGITRIP RMS 610, and POWERLOGIC® DIGITRIP RMS 810D
For Use in Types DS/DSL and DSII/DSLII Low Voltage Circuit Breakers
Class 6035

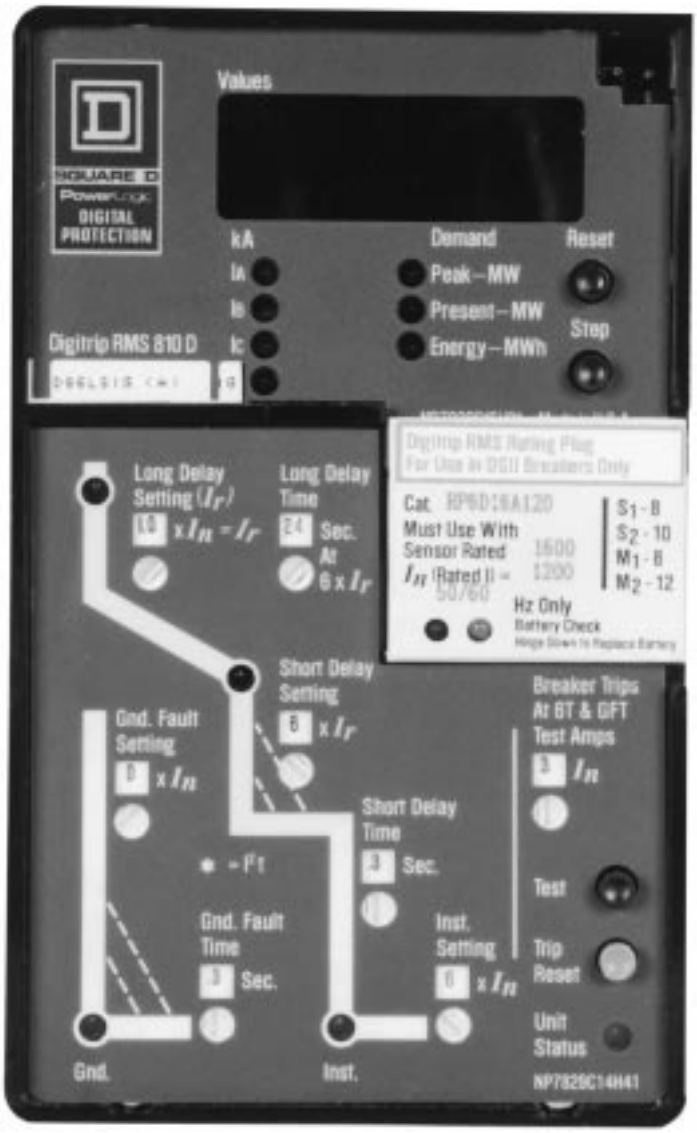

SQUARE D

TABLE OF CONTENTS

INTRODUCTION 1
Organization of this Manual 1

SAFETY PRECAUTIONS 2

RECEIVING, HANDLING, AND STORAGE 2

DIGITRIP RMS TRIP UNITS DESCRIPTION 3
DIGITRIP RMS 510 3
DIGITRIP RMS 610 3
POWERLOGIC® DIGITRIP RMS 810D 4
Available Protection Types 4

BASIC OPERATION 6
General 6
Fixed Instantaneous Override 7
Zone Interlocking 7
Trip and Operation Indicators 7
Discriminator (Making Current Release) 8
Frame Rating, Sensor Rating, and Rating Plugs 8

PROTECTION SETTINGS 12
Changing Settings 12
Long Delay Setting 13
Long Delay Time 13
Long Time Memory 13
Short Delay Setting 15
Short Delay Time 15
Instantaneous Setting 16
Ground Fault Setting 17
Ground Fault Time 18

DIGITRIP RMS 610 OPERATION 19
General 19
Four Character Information Display Window 19
Value Displayed During Normal Service 20
Current Values 20
Messages Displayed After Alarm or Trip 21
Rating Plug Missing or Disconnected Indication 22

POWERLOGIC DIGITRIP RMS 810D OPERATION 23
General 23
Four Character Information Display Window 23
Values Displayed During Normal Service 23
Current Values 23
Power and Energy Values 26
Messages Displayed after Alarm or Trip 28
Rating Plug Missing or Disconnected Indication 28
Potential Transformer Module 30
Communication Power Module 30

TRIP UNIT COMMUNICATIONS:
POWERLOGIC DIGITRIP RMS 810D 31
Trip Unit Address and Baud Rate 31
Personal Computer Workstations 33

© 1998 Square D All Rights Reserved

Personal Computer Workstations and System Display Combination 34
Network Connections 35
Information Communicated by the
POWERLOGIC DIGITRIP RMS 810D 35
System Power (Remote) 37
Remote Closing and Tripping of the Circuit Breaker 37
Remote Resetting of the Trip Unit 37

POWER/RELAY MODULE 38
Power/Relay Module General Information Both Models 38
DIGITRIP RMS 610 Power/Relay Module Only 39
POWERLOGIC DIGITRIP RMS 810D Power/Relay Module Only . . .39

AUXILIARY POWER MODULE 39

TEST PROCEDURE 40
General 40
When to Test 40
Test Provision 41
Preparation for Testing 41
Control Power 42
Testing without Tripping the Circuit Breaker 42
Tripping the Circuit Breaker 43

MAINTENANCE 44
Battery Check 44
Battery Replacement 44

CIRCUIT BREAKER APPLICATION 45
General 45
Trip Actuator 45
Ground Fault Protection 46
Current Sensors 46
Potential Transformer 47

APPENDIX A 48
EXAMPLE OF ZONE SELECTIVE INTERLOCKING WITH DIGITRIP
RMS TRIP UNITS 48
Case 1 48
Case 2 48

APPENDIX B 51
INTERPRETING DISPLAY CODES AFTER THE
CIRCUIT BREAKER TRIPS (DIGITRIP RMS 610
AND POWERLOGIC DIGITRIP RMS 810D 51
Case 1 51
Case 2 52

APPENDIX C 53
Trip Curves 53

APPENDIX D 58
POWERLOGIC DIGITRIP RMS 810D Trip Unit
and DS Circuit Breaker Schematic 58

APPENDIX E 60
POWERLOGIC DIGITRIP RMS 810D Trip Unit
and DSII Circuit Breaker Schematic 60

© 1998 Square D All Rights Reserved

LIST OF FIGURES

Figure 1: DIGITRIP RMS 510 Trip Unit 3
Figure 2: DIGITRIP RMS 610 Trip Unit 3
Figure 3: POWERLOGIC DIGITRIP RMS 810D Trip Unit 4
Figure 4: DIGITRIP RMS 510 Block Diagram with Circuit Breaker Interface 6
Figure 5: Trip Unit Face 9
Figure 6: Changing Settings 12
Figure 7: Long Delay Current Settings 13
Figure 8: Long Delay Time Settings 13
Figure 9: Typical Rating Plug. 14
Figure 10: Removing the Rating Plug 14
Figure 11: Long Time Memory (LTM) Jumper 14
Figure 12: Short Delay Current Settings 15
Figure 13: Short Delay Time Settings 16
Figure 14: Instantaneous Current Settings 16
Figure 15: Ground Fault Current Settings 17
Figure 16: Ground Fault Time Delay Settings 18
Figure 17: DIGITRIP RMS 610 Block Diagram with Circuit Breaker Interface 19
Figure 18: DIGITRIP RMS 610 Trip Unit 20
Figure 19: POWERLOGIC DIGITRIP RMS 810D Block Diagram with Circuit Breaker Interface 24
Figure 20: POWERLOG DIGITRIP RMS 810D Trip Unit. 25
Figure 21: Potential Transformer Module 30
Figure 22: POWERLOGIC with Personal Computer Workstation 33
Figure 23: System Display Model SD-300. 33
Figure 24: System Display Connections 34
Figure 25: POWERLOGIC Network with Personal Computer Workstation and System Display 34
Figure 26: Power/Relay Module 38
Figure 27: Auxiliary Power Module 39
Figure 28: Integral Test Panel (Lower Right Corner of Trip Unit) 40
Figure 29: Typical Rating Plug. 44
Figure 30: Rating Plugs Shown with Covers Closed and Open 44
Figure 31: Typical Schematic Diagram of Basic Connections in Tripping System of the DSII Circuit Breaker 45
Figure 32: Typical Zone Interlocking (Ground Fault Protection) 49
Figure 33: Typical Zone Interlocking Connections with Two Main Circuit Breakers (M1, M2) and a Tie Circuit Breaker (T) (Short Delay Protection) 50
Figure 34: Types DS and DSL Circuit Breakers with DIGITRIP RMS Trip Units Typical Instantaneous Time-Phase Current Characteristic Curve (I) 53
Figure 35: Types DS and DSL Circuit Breakers with DIGITRIP RMS Trip Units Typical Long Delay and Short Delay Time-Phase Current Characteristic Curve (LS) 54
Figure 36: Types DSII and DSLII Circuit Breakers with DIGITRIP RMS Trip Units Typical Instantaneous Time-Phase Current Characteristic Curve (I) 55
Figure 37: Types DSII and DSLII Circuit Breakers with DIGITRIP RMS Trip Units Typical Long Delay Time-Phase Current Characteristic Curve (LS) 56

© 1998 Square D All Rights Reserved

Figure 38: Types DS/DSL and DSII/DSLII Circuit Breakers with DIGITRIP RMS Trip Units Typical Time-Ground Current Characteristic Curve (G) 57
Figure 39: POWERLOGIC DIGITRIP RMS 810D Trip Unit and DS Circuit Breaker Schematic 58
Figure 40: POWERLOGIC DIGITRIP RMS 810D Trip Unit and DSII Circuit Breaker Schematic 60

© 1998 Square D All Rights Reserved

LIST OF TABLES

Table 1: Trip Unit Types of Protection 4
Table 2: DIGITRIP RMS Trip Units Functional Summary. 5
Table 3: Rating Plug Comparison 800 A and 1600 A. 9
Table 4: Rating Plug Catalog Numbers 11
Table 5: Ground Fault Current Pickup Settings 17
Table 6: DIGITRIP RMS 610 Information Functions 21
Table 7: DIGITRIP RMS 610 Message Codes. 22
Table 8: POWERLOGIC DIGITRIP RMS 810D Information Functions 26
Table 9: POWERLOGIC DIGITRIP RMS 810D Message Codes. . . 29
Table 10: POWERLOGIC DIGITRIP RMS 810D Communications . . 36
Table 11: Replacement Batteries 44

© 1998 Square D All Rights Reserved

© 1998 Square D All Rights Reserved

INTRODUCTION

The DIGITRIP® RMS 510, DIGITRIP RMS 610, and POWERLOGIC® DIGITRIP RMS 810D trip units are ac devices with microprocessor-based technology. They provide true root mean square (RMS) current sensing for proper correlation with thermal characteristics of conductors and equipment. The primary function of the trip unit is overcurrent protection. The device analyzes the current signals received from the circuit breaker current sensors. It initiates trip signals to the circuit breaker trip actuator when predetermined current levels and time delay settings are exceeded. In addition to the basic overcurrent protection, all DIGITRIP RMS trip unit models provide information and integral test functions.

This bulletin provides operation and maintenance instructions for the DIGITRIP RMS 510, DIGITRIP RMS 610, and POWERLOGIC DIGITRIP RMS 810D trip units installed in Types DS/DSL and DSII/DSLII low voltage circuit breakers. Because trip units are installed in circuit breakers at the factory, no installation procedures are included in this manual. Refer to Low Voltage Circuit Breakers, Types DSII and DSLII instruction bulletin, 44021-996-01 for installation, operation, and maintenance of circuit breakers. See DS/DSL and DSII/DSLII Voltage Power Circuit Breaker Replacement Parts catalog, 6035CT9801 for spare parts for these circuit breakers. Request CD-ROM 0110TC9601R11/98 for a set of trip curves.

Organization of this Manual

The DIGITRIP RMS 510 is the basic model in this product line. The DIGITRIP RMS 610 includes all features of the 510, plus some enhancements. At the top of the line is the POWERLOGIC DIGITRIP RMS 810D trip unit. It performs all the functions of the DIGITRIP RMS 610. In addition, it has more information displays as well as POWERLOGIC communications capabilities. To reduce repetition, the information in this manual is presented in the following manner:

- “BASIC OPERATION” covers operations that are common to DIGITRIP RMS 510, DIGITRIP RMS 610, and POWERLOGIC DIGITRIP RMS 810D trip units.
- “PROTECTION SETTINGS” covers the available protection settings depending on the type of trip unit. All three models come in six different types.
- “DIGITRIP RMS 610 OPERATION” covers operations that are beyond the scope covered in “BASIC OPERATION” .
- “POWERLOGIC DIGITRIP RMS 810D OPERATION” covers operations that are beyond the scope covered in “BASIC OPERATION”.
- “TRIP UNIT COMMUNICATIONS: POWERLOGIC DIGITRIP RMS 810D” covers POWERLOGIC network communications of the POWERLOGIC DIGITRIP RMS 810D trip unit.
- “POWER/RELAY MODULE” describes the Power/Relay module that comes with the DIGITRIP RMS 610 and POWERLOGIC DIGITRIP RMS 810D trip units.
- “AUXILIARY POWER MODULE”, “TEST PROCEDURE”, “MAINTENANCE”, “CIRCUIT BREAKER APPLICATION”, and “APPENDIX A” apply to all three models of DIGITRIP RMS trip units.
- “APPENDIX B” explains how to interpret display codes after a circuit breaker trips. This information pertains only to the DIGITRIP RMS 610 and POWERLOGIC DIGITRIP RMS 810D trip units.
- “APPENDIX C” has trip curves for reference.
- “APPENDIX D” is a schematic for the POWERLOGIC DIGITRIP RMS 810D trip unit and DS circuit breaker.
- “APPENDIX E” is a schematic for the POWERLOGIC DIGITRIP RMS 810D trip unit and DSII circuit breaker.

© 1996 Square D All Rights Reserved

SAFETY PRECAUTIONS

⚠ DANGER

HAZARD OF ELECTRIC SHOCK, BURN OR EXPLOSION

- Do not attempt to install or perform maintenance on equipment while it is energized. Verify that no voltage is present before proceeding with the task. Follow accepted safety procedures. Square D Company is not liable for the improper application or installation of its products.
- Observe all recommendations, warnings, and cautions concerning the safety of personnel and equipment, as well as all general and local safety laws, codes, and procedures.
- The recommendations and information in this bulletin are based on Square D Company experience and judgment. However, they cannot cover every application or circumstance that may arise. If you have any questions or need further information or instructions, please contact Square D Field Services at (800) 634-2003.

Failure to follow these instructions will result in death or serious injury.

RECEIVING, HANDLING, AND STORAGE

The trip units are already installed in DS and DSII circuit breakers at the factory. Refer to the Low Voltage Circuit Breakers instruction bulletin for receiving, handling, and storage procedures.

© 1996 Square D All Rights Reserved

DIGITRIP RMS TRIP UNITS DESCRIPTION

The DIGITRIP RMS 510, DIGITRIP RMS 610, and POWERLOGIC DIGITRIP RMS 810D trip units are components that are mounted within a drawout circuit breaker, which is part of metal enclosed switchgear. When the circuit breaker is closed, no external power is required for the protection system. The trip unit derives power to operate from current signal levels and current sensors integrally mounted in the circuit breaker. DIGITRIP RMS 510, DIGITRIP RMS 610, and POWERLOGIC DIGITRIP RMS 810D trip units are UL Listed for use in Types DS/DSL and DSII/DSLII low voltage circuit breakers.

DIGITRIP RMS 510

The DIGITRIP RMS 510 trip unit performs the basic functions covered in “BASIC OPERATION” on page 6. Protection settings described in“PROTECTION SETTINGS” on page 12 are available depending on the type of trip unit. Figure 1 depicts a typical DIGITRIP RMS 510 trip unit.

DIGITRIP RMS 610

The DIGITRIP RMS 610 trip unit performs all the functions of the DIGITRIP RMS 510 trip unit. In addition, it has a four character display, three phase and one ground (when supplied) current pointer LEDs, and a Step pushbutton for changing information displays. Figure 2 depicts a typical DIGITRIP RMS 610 trip unit.

6035-9801

Figure 1: DIGITRIP RMS 510 Trip Unit

6035-9802

Figure 2: DIGITRIP RMS 610 Trip Unit

© 1996 Square D All Rights Reserved

POWERLOGIC® DIGITRIP RMS 810D

The POWERLOGIC DIGITRIP 810D trip unit (Figure 3) performs all the functionsof the DIGITRIP RMS 610 trip unit with the addition of peak demand, present demand, and energy consumed LEDs. It also has a peak demand Reset pushbutton.

The trip unit displays information and also has remote communications via a POWERLOGIC communication network signal link. When used in a circuit breaker equipped with the spring release option, the unit allows remote tripping and closing of the circuit breaker by POWERLOGIC communication signals.

Available Protection Types

All three models of trip units are available in six different types. Each trip unit may be equipped with a maximum of five phase and two ground (time-current) adjustments to meet specific application requirements. Table 1 lists the protection provided by each available type.

Table 1: Trip Unit Types of Protection

Protection Provided	Type
Long Time/Instantaneous	LI
Long Time/Short Time	LS
Long Time/Short Time/Instantaneous	LSI
Long Time/Instantaneous/Ground	LIG
Long Time/Short Time/Ground	LSG
Long Time/Short Time/Instantaneous/Ground	LSIG

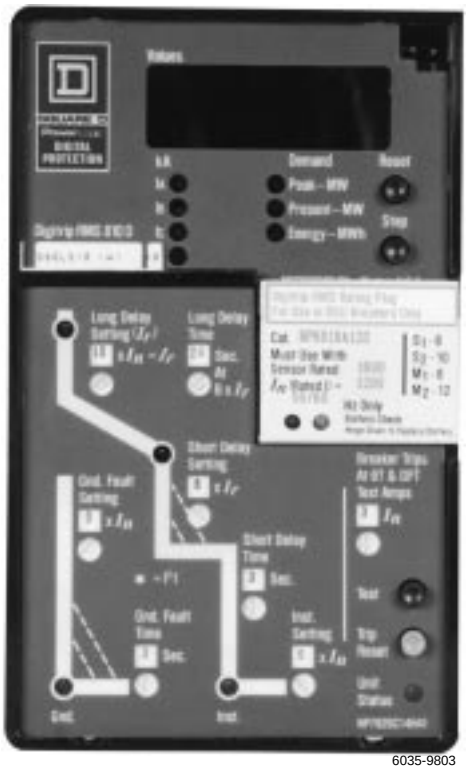

Figure 3: POWERLOGIC DIGITRIP RMS 810D Trip Unit

© 1996 Square D All Rights Reserved

Table 2: DIGITRIP RMS Trip Units Functional Summary

DIGITRIP RMS Type	510	610	POWERLOGIC 810D
Long Delay Setting	X	X	X
Long Delay Time	X	X	X
Long Time Memory Powered	X	X	X
Overtemperature	X	X	X
Short Delay Pick-Up	OPT.	OPT.	OPT.
Short Delay Time	OPT.	OPT.	OPT.
Flat/I^2T Response	X	X	X
Zone Interlocking	See Note ①	See Note ①	See Note ①
Instantaneous Pick-Up	OPT.	OPT.	OPT.
DIScriminator Disable Switch	See Note ②	See Note ②	See Note ②
Ground Fault Pick-Up	OPT.	OPT.	OPT.
Ground Fault Time	OPT.	OPT.	OPT.
Flat/I^2t Response	X	X	X
Ground Time Memory	X	X	X
Zone Interlocking	See Note ①	See Note ①	See Note ①
Interchangeable Rating Plug	X	X	X
Auto Lockout After Trip		X	X
Mode of Trip LEDs	X	X	X
Battery - for Mode of Trip LEDs	X	X	X
Battery Status LED (Green)	X	X	X
Battery Test Pushbutton	X	X	X
Power/Relay Module		X	X
Remote Signal Contacts			
High Load Alarm		X	X
Long Delay Trip		X	X
Short Circuit Trip		X	X
Ground Fault Trip		See Note ③	See Note ③
Integral Test Provisions	X	X	X
Trip Unit Status Indication LED	X	X	X
4 Digit Display		X	X
ØA Current		X	X
ØB Current		X	X
ØC Current		X	X
Ground		See Note ③	See Note ③
Potential Transformer Module			X
PTM Disconnect Plug for Dielectric Testing of Circuit Breaker			X
Energy Monitoring and Communications			X

X = Standard

OPT. = Optional

NOTES:
① Use of zone interlocking is optional with circuit breaker wiring modification.
② Supplied if INST protection is omitted.
③ Supplied only when trip unit is equipped with ground fault protection option.

© 1996 Square D All Rights Reserved

BASIC OPERATION

This section covers basic operation that is common to all of the DIGITRIP RMS trip unit models. DIGITRIP RMS 510 trip unit operation is covered in its entirety in this section. See “DIGITRIP RMS 610 OPERATION” on page 19 for additional operating instructions for the DIGITRIP RMS 610 trip unit. Refer to“POWERLOGIC DIGITRIP RMS 810D OPERATION” on page 23 and to “TRIP UNIT COMMUNICATIONS: POWERLOGIC DIGITRIP RMS 810D” on page 31 for additional operating instructions for the POWERLOGIC DIGITRIP RMS 810D trip unit.

General

DIGITRIP RMS trip units are designed for use in industrial environments where the ambient temperature ranges from –4 °F (–20 °C) to 185 °F (85 °C) and rarely exceeds 167 °F (75 °C). Because temperatures outside this range may adversely affect performance, trip units have a built-in protection feature that is factory set to trip the circuit breaker if the microcomputer chip temperature exceeds 95 °C (203 °F). If high temperature trips the circuit breaker, the Long Delay Time LED comes on.

The trip unit has a custom-designed integrated circuit that includes a microcomputer to perform numeric and logic functions. Figure 4 is a block diagram for the DIGITRIP RMS 510 trip unit. See Figure 17 on page 19 for a block diagram for the DIGITRIP RMS 610 trip unit. See Figure 19 on page 24 for a block diagram for the POWERLOGIC DIGITRIP RMS 810D.

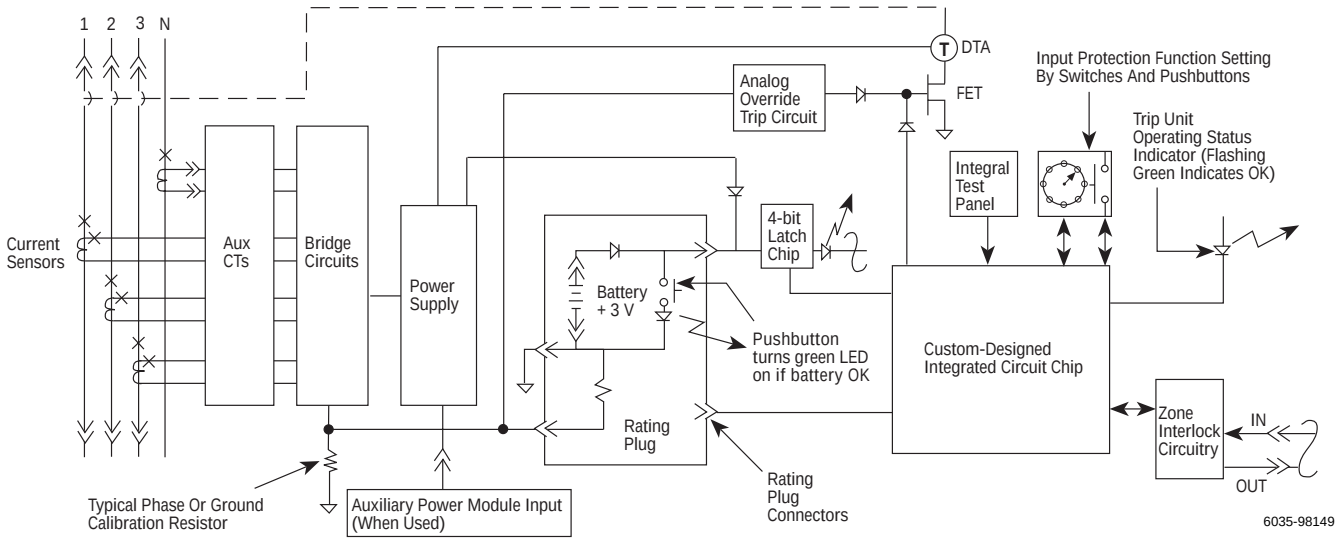

Figure 4: DIGITRIP RMS 510 Block Diagram with Circuit Breaker Interface

In the DIGITRIP RMS trip units, all sensing and tripping power required for the protection function is derived from the current sensors in the circuit breaker. The secondary currents from these sensors provide the correct input information for the protection functions, as well as tripping power, whenever the circuit breaker is carrying current. These current signals develop analog voltages across the appropriate calibrating resistors including:

- phase currents
- ground current (when supplied)
- rating plug

The resulting analog voltages are digitized by the integrated circuits.

© 1996 Square D All Rights Reserved

The microcomputer, in cyclic fashion, repeatedly scans the voltage values across each calibrating resistor and enters these values into random access memory (RAM). This data is used to calculate true RMS current values. These values are repeatedly compared with the protection function settings and other operating data stored in read only memory (ROM). The software program determines whether to initiate protection functions, including tripping the circuit breaker through the low energy trip device (flux transfer shunt trip or direct trip actuator) in the circuit breaker.

Fixed Instantaneous Override

For Type LS or LSG DIGITRIP RMS trip units are not equipped with an adjustable instantaneous setting, the override analog trip circuit is factory preset to a value no greater than the short-time withstand current rating of the circuit breaker in which the trip unit is installed.

Zone Interlocking

Zone selective interlocking (or zone interlocking) is available for DIGITRIP RMS trip units having short delay or ground fault protection or both. Zone interlocking provides the fastest possible tripping for faults within the zone of protection of the circuit breaker, and provides positive coordination among all circuit breakers in the system (mains, ties, feeders, and downstream circuit breakers) to limit the outage to the effected part of the system only. When zone interlocking is enabled, a fault within the zone of protection of the circuit breaker will cause the DIGITRIP RMS trip unit to:

1. Trip the effected circuit breaker instantaneously, and, at the same time,
2. Send a signal to upstream RMS DIGITRIP trip units to restrain them from tripping immediately. The restraining signal causes upstream circuit breakers to follow their set coordination times so that disruptions are minimized while the fault is cleared in the shortest time possible.

This signal requires only a pair of wires from the output terminals of the trip unit in the circuit breaker downstream to the input terminals of the trip unit in the circuit breaker upstream.

NOTE: If circuit breaker #1 receives a zone interlocking signal from circuit breaker #2, and the fault current level is less than the trip unit setting for #1, the signal from #2 will not cause #1 to trip.

For standard time-delay coordination only (without zone interlocking), connect the zone interlocking terminals with jumper wires according to the connection diagram for the circuit breaker. The time-delay settings provide the intended coordination. The jumper wires ensure time coordination, which protects the equipment from nuisance tripping. For an example of how zone selective interlocking may be used, see “APPENDIX A” on page 48.

NOTE: Zone Interlocking is possible only with other DS/DSL or DSII/DSLII circuit breakers equipped with Digitrip RMS trip units. It is not available on circuit breakers not equipped with Digitrip RMS trip units.

Trip and Operation Indicators

Time-current curves are depicted on the face of the trip unit. After an automatic trip, the reason for the trip is identified by the segment of the time-current curve where the LED illuminates (Figure 5 on page 9). A backup battery continues to supply power to the LEDs after an automatic trip.

A green Unit Status LED (Figure 5 on page 9) indicates the operational status of the trip unit. Once the load current through the circuit breaker exceeds approximately 10% of the frame/current sensor rating, the LED flashes once each second, indicating that the trip unit is energized and operating properly. If the LED stays on steadily (does not flash), the trip unit is not ready to perform its circuit protective functions. If the LED continues to stay on steadily, check the trip unit for proper operation. Refer to “TEST PROCEDURE” on page 40.

© 1996 Square D All Rights Reserved

Discriminator (Making Current Release)

Type LS or LSG DIGITRIP RMS trip units do not have an adjustable instantaneous protection setting. Instead, they have a making current release, or discriminator circuit. This circuit stops the circuit breaker from being closed and latched-in on a faulted circuit. The nonadjustable release is preset at 11 times the installed rating plug current (I_n).

The discriminator is enabled only for the first 10 cycles after an initial circuit breaker closing, provided the load current exceeds approximately 10% of the circuit breaker current sensor rating. If the load current through the circuit breaker drops to less than the 10% value, the release will reset. Once reset, the release remains enabled until the load current passing through the circuit breaker exceeds the 10% value for 10 cycles. The discriminator trips the circuit breaker instantaneously.

If the circuit breaker is intended to close (but not trip out) into a circuit where current could initially be higher than 11 x I_n, it is possible to deactivate the discriminator. If the circuit breaker closes onto a fully rated fault current when the discriminator is deactivated, the circuit breaker will wait for the full short-time delay setting before it trips. To deactivate the discriminator, turn the Override setting switch (next to the bottom edge of the trip unit) from the DIS position until the window is blank.

This switch has eight positions. Seven of them show DIS in the window. Only one position displays a blank window. When the Override window is blank, the only fast-acting high short-circuit protection available is the Override (Fixed Instantaneous). Refer to “Fixed Instantaneous Override” on page 7.

Frame Rating, Sensor Rating, and Rating Plugs

The Frame Rating of a circuit breaker is the maximum RMS current it can carry continuously. The maximum short-circuit current ratings of the circuit breaker are related to the frame rating as well.

It is often advisable to designate a current value (I_n) that is less than the full frame rating as the basis for the coordination of the circuit breaker protection functions. For the DIGITRIP RMS trip units, the maximum continuous current (I_n) is set by the rating plug or current sensors or both.

The (Current) Sensor Rating is the maximum RMS current the circuit breaker can carry with the specified current sensors installed. The sensor rating may be the same or less than the frame rating, but not greater.

The Rating Plug (Figure 5 on page 9) fits into a special cavity to complete the trip unit.

⚠ WARNING

HAZARD OF PERSONAL INJURY OR EQUIPMENT DAMAGE

Installing a rating plug that does not match the circuit breaker type and frame rating (or sensor rating, if applicable) can cause miscoordination or failure of the protection system. Before putting the rating plug into the trip unit, verify that the circuit breaker type and frame rating (or sensor rating, if applicable), matches what is on the rating plug face.

Failure to follow this instruction can result in death or serious injury.

© 1996 Square D All Rights Reserved

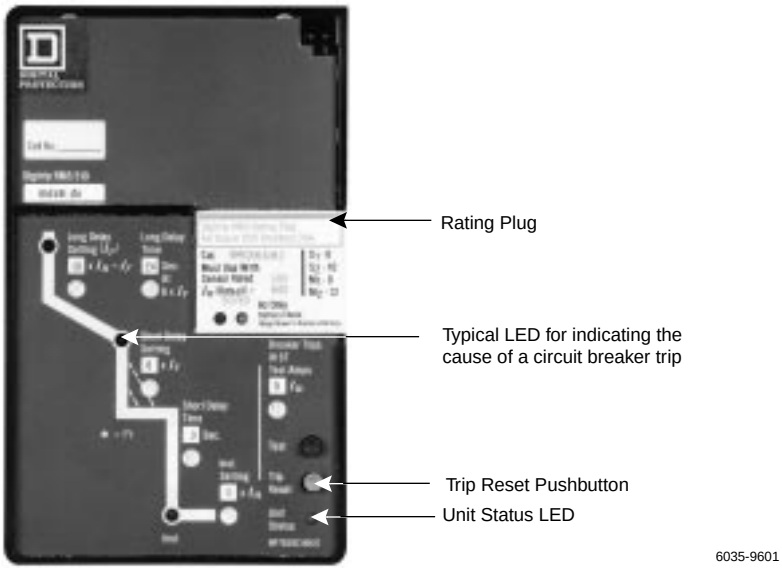

Figure 5: Trip Unit Face

The rating plug sets the I_n value, the basis for the trip unit current protection settings. Each circuit breaker frame rating represents the maximum current it can carry continuously. However, for proper coordination of overcurrent protection, it is often advisable to choose different levels of I_n for different circuit breakers of the same frame rating. An assortment of rating plugs with different I_n values is available for each breaker frame rating to allow flexibility to change the value of I_n without having to change the primary current sensors on the breaker. Refer to Table 4 on page 11 for rating plug catalog numbers. By changing the rating plug, the range of current protection settings can be changed without having to remove the circuit breaker from its enclosure.

For example, if a circuit designated to carry 600 A initially is to be uprated to 1200 A in the future, 1600 A cables and a 1600 A breaker frame could be installed with a trip unit with a rating plug for which I_n = 800 A. Later on when the additional load is ready to come on line, the rating plug can be exchanged for one for which I_n = 1600 A, without having to remove the breaker from its enclosure. As shown in Table 3, the available settings would offer the following choices:

Table 3: Rating Plug Comparison 800 A and 1600 A

$I_r = I_n$ x	.5	.6	.7	.8	.85	.9	.95	1.0
I_n = 800 A LDPU I_r = (in amperes)	400	480	560	650	680	720	760	800
I_n = 1600 A LDPU I_r = (in amperes)	800	960	1120	1280	1360	1440	1520	1600

NOTE: Rating plugs from DIGITRIP models 500/600/700/800 cannot be used with model DIGITRIP RMS 510, DIGITRIP RMS 610, or POWERLOGIC DIGITRIP RMS 810D trip units. The connection pins are located in different positions.

© 1996 Square D All Rights Reserved

Rating plugs for the DIGITRIP RMS trip units are marked for both 50 and 60 Hz systems and may be applied to either system.

Rating plugs have two current ratings listed on their covers:

- The “Must be used with Sensor Rated” current value
- “I_n (Rated I) =” current value.

I_n is the base value for the trip unit current settings:

- The Instantaneous and Ground Fault Current Settings (if applicable) are multiples of I_n. See “Instantaneous Setting” on page 16 and“Ground Fault Setting” on page 17.
- The Long Delay Current Setting, I_r, is a multiple of I_n.
- Long Delay Current Setting = I_r = LD x I_n. See “Long Delay Setting” on page 13.
- The Short Delay Current Setting (if provided) is a multiple of I_r, which in turn is a multiple of I_n.
- The Short Delay Current Setting = SD x I_r = SD x LD x I_n. See “Short Delay Setting” on page 15.

If the rating plug is removed from the trip unit while the circuit breaker is closed, the circuit breaker will trip. Therefore, securely tighten the rating plug before operating the circuit breaker.

© 1996 Square D All Rights Reserved

Table 4: Rating Plug Catalog Numbers

Rated Current (A) In	Sensor Ratings (A)	Catalog Number 50/60 Hz
100	200	RP6D02A010
200		RP6D02A020
200	300	RP6D03A020
250		RP6D03A025
300		RP6D03A030
200	400	RP6D04A020
250		RP6D04A025
300		RP6D04A030
400		RP6D04A040
300	600	RP6D06A030
400		RP6D06A040
600		RP6D06A060
400	800	RP6D08A040
600		RP6D08A060
800		RP6D08A080
600	1200	RP6D12A060
800		RP6D12A080
1000		RP6D12A100
1200		RP6D12A120
800	1600	RP6D16A080
1000		RP6D16A100
1200		RP6D16A120
1600		RP6D16A160
1000	2000	RP6D20A100
1200		RP6D20A120
1600		RP6D20A160
2000		RP6D20A200
1600	2400	RP6D24A160
2000		RP6D24A200
2400		RP6D24A240
1600	3200	RP6D32A160
2000		RP6D32A200
2400		RP6D32A240
3000		RP6D32A300
3200		RP6D32A320
3200		RP6D32A320S
2000	4000	RP6D40A200
2400		RP6D40A240
3200		RP6D40A320
4000		RP6D40A400
3200	5000	RP6D50A320
4000		RP6D50A400
5000		RP6D50A500

© 1996 Square D All Rights Reserved

PROTECTION SETTINGS

Before authorizing the use of any circuit breaker, verify that each trip unit protection setting is set to the values specified for the installation. Whatever adjustments are required, if any, depend on the type of protection the particular model is designed to provide. Types of protection available vary depending on the type of trip unit.

Changing Settings

To change settings, use a small screwdriver to turn the slotted head on a rotary switch. As shown in Figure 6, settings are indicated in a rectangular viewing window above the rotary switch.

The rating plug installed into the unit determines the maximum continuous current rating (I_n) of the circuit breaker. Instantaneous and ground current settings are defined in multiples of I_n.

Time-current curves on the trip unit face plate illustrate the effect of each protection curve setting. The rotary switch for each setting is beside to the portion of the simulated time-current curve it controls. If an automatic trip occurs (as a result of the current exceeding the pre-selected value), the LED in the appropriate segment of the simulated time-current curve illuminates, indicating the reason for trip.

Figures 10 through 15 illustrate the available settings and the effect of changing the settings.

Figure 6: Changing Settings

© 1996 Square D All Rights Reserved

Long Delay Setting

Eight long delay current settings are possible as shown in Figure 7. Each I_r setting is expressed as a multiple (ranging from 0.5 to 1) of the rating plug current I_n.

NOTE: I_r is also the basis for the short delay current setting. See "Short Delay Setting" on page 15.

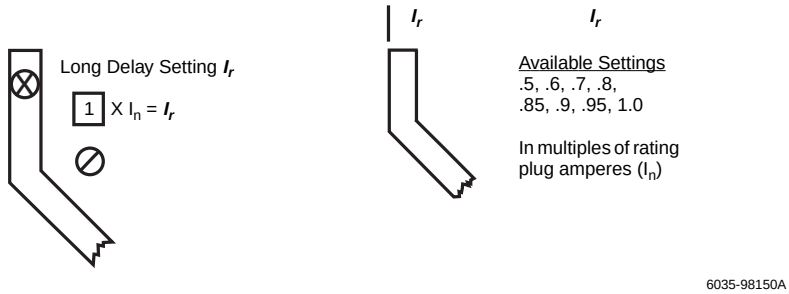

Figure 7: Long Delay Current Settings

Long Delay Time

Eight long delay time settings are possible, ranging from 2 to 24 seconds. Refer to Figure 8 for available settings. The long delay time (LDT) is the total clearing time when the current value equals six times I_r.

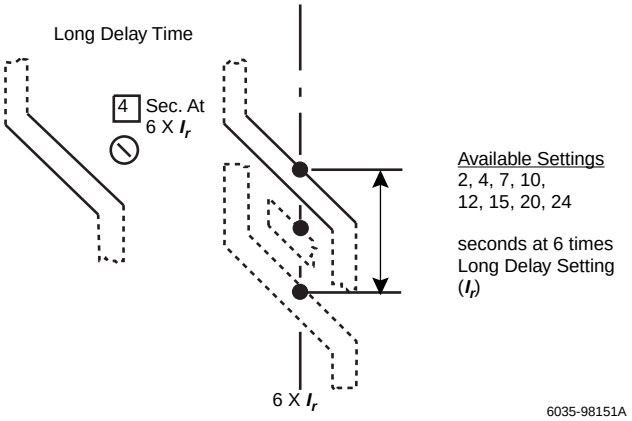

Figure 8: Long Delay Time Settings

Long Time Memory

In addition to standard long delay protection, the DIGITRIP RMS trip unit has long time memory (LTM), which protects load circuits from the effects of repeated overload conditions. If a circuit breaker is reclosed soon after a long delay trip, and the current again exceeds the long delay setting (I_r), the LTM automatically reduces the time to trip. This allows for the higher-than-normal load circuit temperature, which is a result of the previous overload condition. Each time an overload condition is repeated, the LTM causes the circuit breaker to trip in a time progressively earlier than the long delay time setting. When the load current returns to normal, the LTM begins to reset. After about 10 minutes, it is fully reset. The next long delay trip time will again be the setting value.

Units are shipped from the factory with the LTM function inactive. In certain applications, it is desirable to enable the LTM function. To enable the LTM function:

© 1996 Square D All Rights Reserved

1. Open the circuit breaker.
2. Open the cover on the rating plug. See Figure 9.

Figure 9: Typical Rating Plug

3. Loosen the screw in the rating plug. See Figure 10.

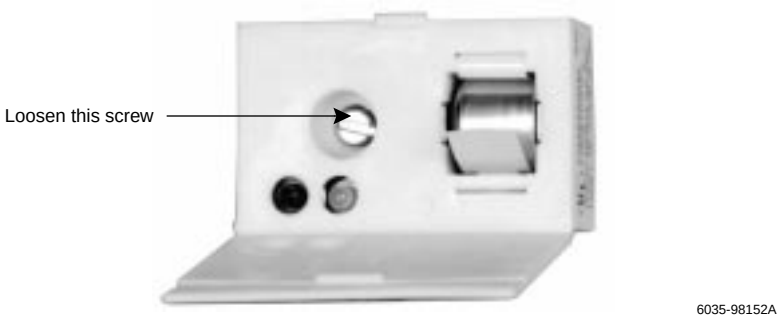

Figure 10: Removing the Rating Plug

4. Pull the rating plug out.
5. Using a small screwdriver, pry the LTM jumper out of the inactive position and move it to the active position. See Figure 11.

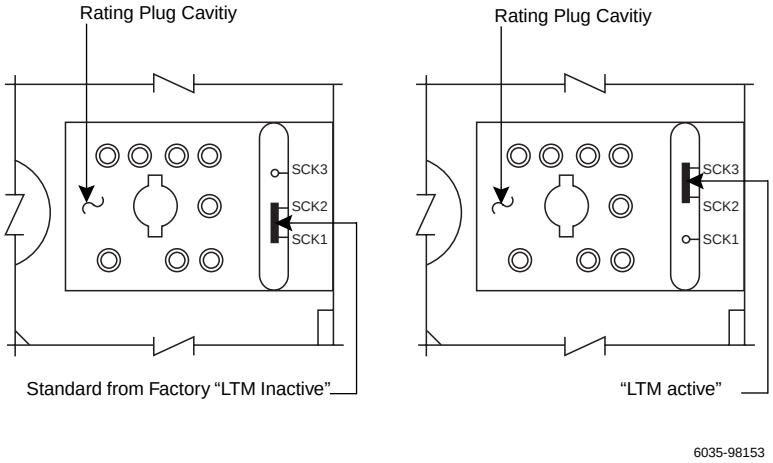

Figure 11: Long Time Memory (LTM) Jumper

© 1996 Square D All Rights Reserved

Consider the action of the LTM when performing multiple Long Delay Time tests. See “Preparation for Testing,” page 40.

When the circuit breaker is closed, the Long Delay Trip LED can erroneously indicate that an LDT has occurred. This can happen when an overload current momentarily exceeds the long delay current setting, I_r, so that the Long Delay LED flashes to indicate the overload condition. If, at the exact moment that the LED is on, the load current drops to a value less than 10% of the circuit breaker current sensor rating, then the trip unit stops functioning while the 4-bit latch chip is set and the LED remains lit. If the current again increases to a value above the long delay current setting, I_r, and then returns to normal, the LDT will reset itself. To manually clear the LDT or any other trip indication at any time, press the red Trip Reset pushbutton.

Short Delay Setting

Eight short delay current settings are possible (see Figure 12). Six settings are in the range from 2 to 6 times I_r. The other two settings are S_1 or S_2 times I_r. I_r is the long delay current setting. S_1 equals 8 and S_2 equals 10 for DS and DSII circuit breakers. S_1 and S_2 are both specified on the rating plug face.

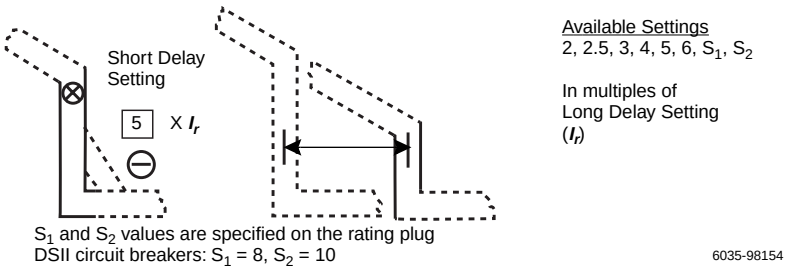

Figure 12: Short Delay Current Settings

Short Delay Time

Two different short delay time curve shapes are available—fixed time (flat) and I^2t response. Refer to Figure 13 on page 16. The shape selected depends on the type of selective coordination chosen. The I^2t response provides a longer time delay in the low end of the short delay current range than will the flat response.

Five flat (.1, .2, .3, .4, .5 second) and three I^2t (.1*, .3*, .5* second) response time delay settings are possible. The asterisk (*) appearing in the viewing window identifies the I^2t response settings. The I^2t response is applicable to currents less than eight times I_r, the long delay setting. For currents greater than eight times I_r, the I^2t response reverts to the flat response.

© 1996 Square D All Rights Reserved

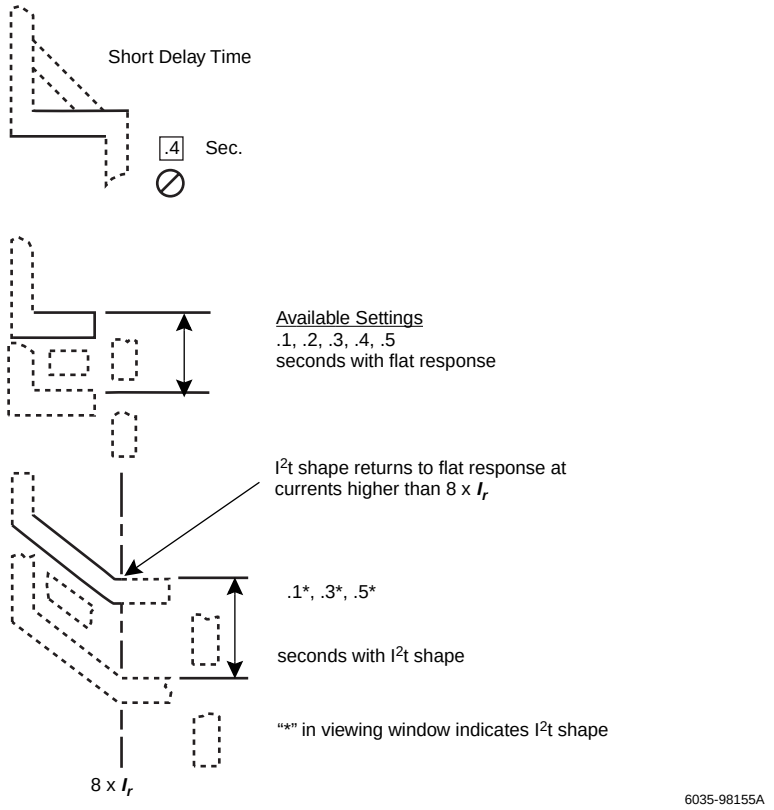

Figure 13: Short Delay Time Settings

Instantaneous Setting

Eight instantaneous current settings are possible as shown in Figure 14. Six settings range from two to six times I_n, the rating plug value, and the other two settings are M_1 or M_2 times I_n. M_1 equals 8 and M_2 equals 12 for DSII circuit breakers. M_1 and M_2 are both specified on the rating plug face.

NOTE: LS and LSG type trip units do not have an instantaneous setting. Instead, they have a making current release, or discriminator. See "Discriminator (Making Current Release)" on page 8," and "Fixed Instantaneous Override" on page 7, for available fast-acting high short-circuit protection.

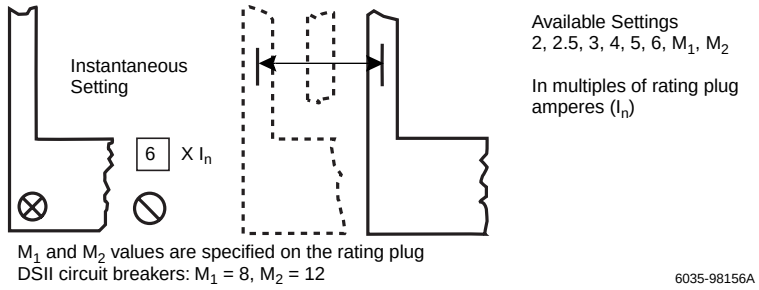

Figure 14: Instantaneous Current Settings

© 1996 Square D All Rights Reserved

Ground Fault Setting

Eight ground fault current settings are available. These are labeled with the code letters A, B, C, D, E, F, H, and K, as illustrated in Figure 15. In general, the current settings range from 0.25 to 1.0 times I_n, the rating plug value, but cannot exceed 1200 A. The specific ground fault current settings for each letter are listed in Table 5 and on the applicable time-current curve for the circuit breaker.

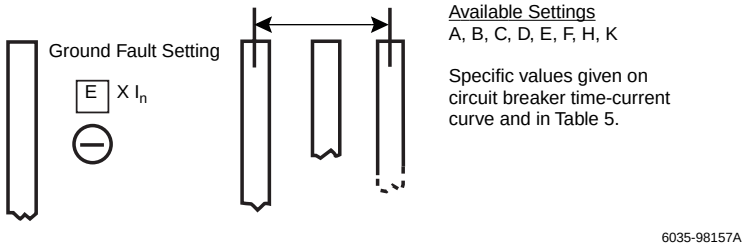

Figure 15: Ground Fault Current Settings

Table 5: Ground Fault Current Pickup Settings

Installed Rating Plug Amperes (I_n)	Pickup Setting Amperes①							
	A②	B②	C②	D②	E	F	H	K
100	25	30	35	40	50	60	75	100
200	50	60	70	80	100	120	150	200
250	63	75	88	100	125	150	188	250
300	75	90	105	120	150	180	225	300
400	100	120	140	160	200	240	300	400
600	150	180	210	240	300	360	450	600
800	200	240	280	320	400	480	600	800
1000	250	300	350	400	500	600	750	1000
1200	300	360	420	480	600	720	900	1200
1600	400	480	560	640	800	960	1200	1200
2000	500	600	700	800	1000	1200	1200	1200
2400	600	720	840	960	1200	1200	1200	1200
3200	800	960	1120	1200	1200	1200	1200	1200
4000	1000	1200	1200	1200	1200	1200	1200	1200
5000	1200	1200	1200	1200	1200	1200	1200	1200

① Except as noted, tolerances on pickup levels are +10% of values shown in chart.
② Ground fault pickup levels shown are nominal values when tested with external control power present. Without external control power, such as is the case with the DIGITRIP RMS 510, ground pickup levels may exceed these values and be as high as the value shown for the “E” setting of that particular rating plug.

© 1996 Square D All Rights Reserved

Ground Fault Time

As illustrated in Figure 16, two different ground fault curve shapes are available —fixed time (flat) and I^2t response. The shape selected depends on the type of selective coordination chosen. The I^2t response provides a longer time delay in the low end of the ground fault current range than does the flat response.

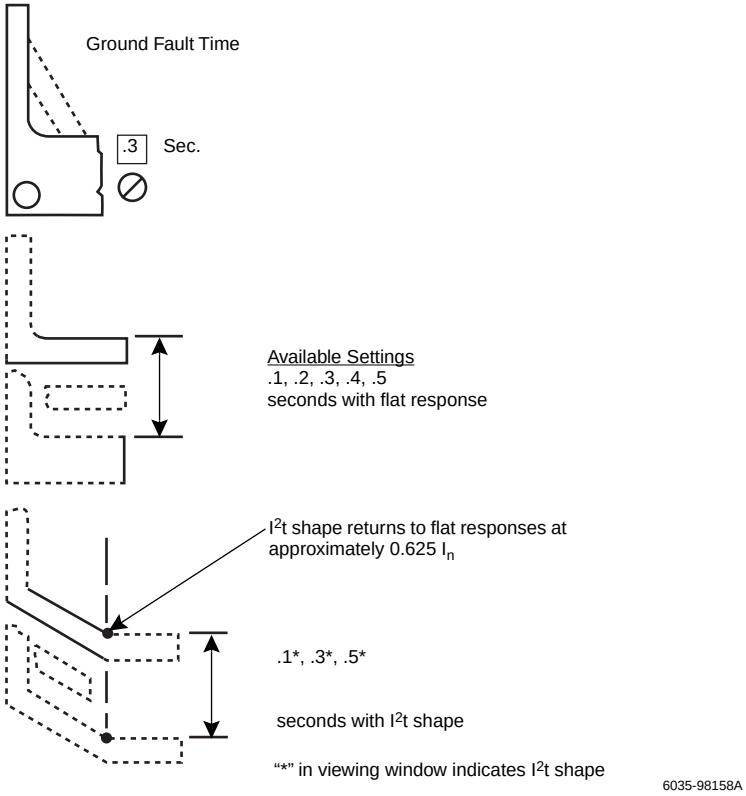

Figure 16: Ground Fault Time Delay Settings

Five flat (0.1, 0.2, 0.3, 0.4, 0.5 seconds) and three I^2t (0.1*, 0.3*., 0.5* seconds) response time delay settings are possible. The asterisk (*) appearing in the viewing window, identifies I^2t response settings. The I^2t response applies to currents less than 0.625 times the ampere rating of the installed rating plug (I_n). For currents greater than 0.625 x I_n, the I^2t response reverts to the flat response.

© 1996 Square D All Rights Reserved

DIGITRIP RMS 610 OPERATION

General

This section covers DIGITRIP RMS 610 operation that is beyond the scope of the basics covered in “BASIC OPERATION” on page 6. See “PROTECTION SETTINGS” on page 12 for protection settings available depending on the type of unit. In addition to all the features that the DIGITRIP RMS 510 has, the DIGITRIP RMS 610 also has:

- Local four-digit alphanumeric display for
  - — Amperes
  - — Mode of trip
  - — Service trip messages
- Options available:
  - — Local high load indication
  - — Remote signal contacts for high load and mode of trip (via the auxiliary trip relay-ATR)

The trip unit uses a custom-designed integrated circuit, which includes a microcomputer to perform numeric and logic functions. Figure 17 is a block diagram for the DIGITRIP RMS 610 trip unit.

Four Character Information Display Window

The four-digit alphanumeric display window (Figure 18 on page 20) serves two basic purposes: instrumentation and mode of trip and trouble indication. The information displayed in the window is listed in Table 6 on page 21.

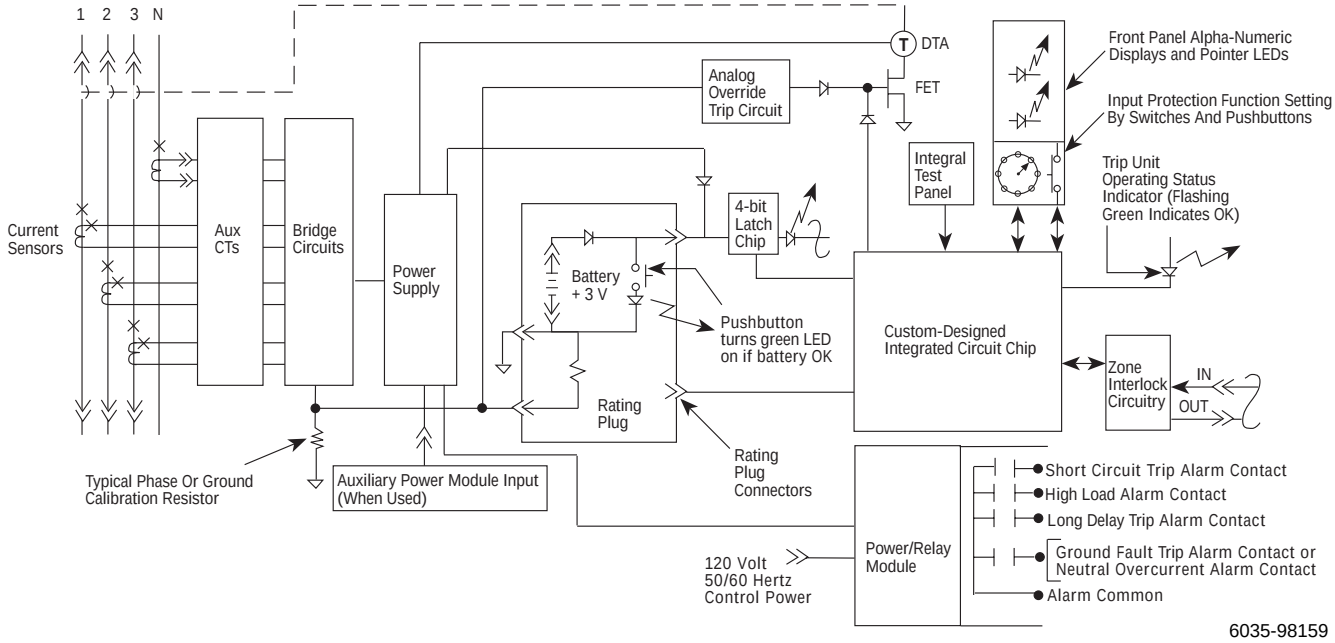

Figure 17: DIGITRIP RMS 610 Block Diagram with Circuit Breaker Interface

© 1996 Square D All Rights Reserved

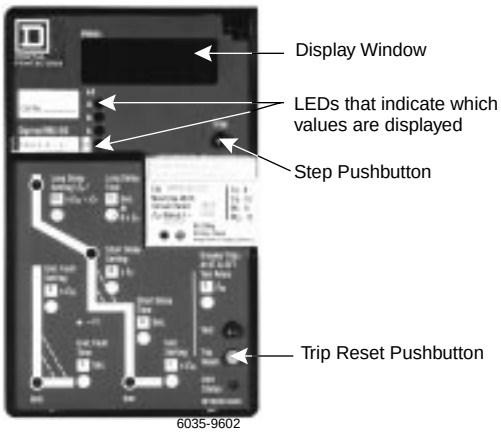

Figure 18: DIGITRIP RMS 610 Trip Unit

Value Displayed During Normal Service

The alphanumeric display window provides current values under normal service conditions and coded messages after an alarm condition or after an overcurrent trip operation. Four LEDs below the display window indicate which value of current appears in the display window. Press the Step pushbutton to view the value of the next parameter. See Figure 18.

Current Values

During the normal service conditions, with the circuit breaker closed, the Digitrip RMS 610 serves as an ammeter, displaying the individual phase currents (I_A, I_B, I_C) and ground current (I_G) or the fourth pole (neutral) current (I_D), provided the circuit breaker is set up for ground or fourth pole protection. Current values are displayed in kA. The value displayed is current in the pole (or ground) indicated by the LED that is on. Press the Step pushbutton to view the values of current in the other phases. The range, accuracy, and wave shape parameters for current values displayed are:

RANGE:	5% to 100% of (Current) Sensor Rating for Type DS and DSII circuit breakers.
ACCURACY:	+2% of (Current) Sensor Rating for Type DS and DSII circuit breakers.
WAVE SHAPE:	Sinusoidal, reference IEC 947-2 Appendix F (Harmonic content included for True RMS reading).

© 1996 Square D All Rights Reserved

Table 6: DIGITRIP RMS 610 Information Functions

	Trip Unit Type					
	LI	LSI	LS	LIG	LSG	LSIG
4-Character LED Display	x	x	x	x	x	x
Current Values:						
Phase A Current (Ia) (kA)	x	x	x	x	x	x
Phase B Current (Ib) (kA)	x	x	x	x	x	x
Phase C Current (Ic) (kA)	x	x	x	x	x	x
Ground Current (Ig) (kA)				x	x	x
Message Codes:						
DISC = DISCriminator Trip			x		x	
GNDT = GrouND Trip				x	x	x
HILD = High LoaD Alarm	x	x	x	x	x	x
INST = INStantaneous Trip	x	x		x		x
LDPU = Long-Time Delay Pickup	x	x	x	x	x	x
LDT = Long-Time Delay Trip	x	x	x	x	x	x
ORNG = OverRaNGe Trip	x	x	x	x	x	x
PLUG = Rating PLUG Problem	x	x	x	x	x	x
SDT = Short-Time Delay Trip		x	x		x	x
TEMP = OverTEMPerature Trip	x	x	x	x	x	x
TEST = TEST Ready to Begin	x	x	x	x	x	x

Messages Displayed After Alarm or Trip

After an alarm condition or circuit breaker trip operation occurs, one of the coded messages listed in Table 7 on page 22 appears in the display window, provided control power is still available for the Power/Relay Module (See “POWER/RELAY MODULE” on page 38 for information on the Power/Relay Module). When an ALARM condition occurs, the operator has time to take action, such as reducing the load, to correct the situation. The message remains in the display window until the Step pushbutton is pressed. Then the message disappears and the values of currents (kA) at the moment can be viewed in the window.

NOTE: Press the Step pushbutton several times to verify that the values of all the currents appear. The first value displayed may not be the highest.

Following a circuit breaker TRIP operation, the display window indicates the reason for trip, using coded messages such as INST (Instantaneous Trip), LDT (Long Delay Trip), and so forth. As with the alarm function, pressing the Step pushbutton clears the reason for trip message. The display window then shows the values of current at the time of trip. The values remain in memory, and the LED indicating the reason for trip stays on until the trip unit is reset by pressing the red Trip Reset pushbutton (Figure 18).

NOTE: Record all values of interest, and note which LEDs are lit before resetting the trip unit. Correct the cause of the overload or fault before resetting the trip unit.

The LOCKOUT after trip feature requires that the trip unit be reset before the breaker can be closed again.

For examples of how to interpret the display after an overload and after a short circuit, see “APPENDIX B” on page 51.

© 1996 Square D All Rights Reserved

Rating Plug Missing or Disconnected Indication

If the rating plug is missing or not well connected, PLUG appears in the display and the instantaneous/override LED is on. If the circuit breaker is closed, it will trip. If it is open, it will remain trip-free, as long as 120 Vac control power is available to the Power/Relay Module. See "POWER/RELAY MODULE" on page 38 for more information. Even if control power is lost, and the breaker is reclosed before the rating plug condition is corrected, the trip unit will trip the breaker again. A backup battery provides power for LEDs when external control power to the Power/Relay Module is not available.

NOTE: The battery only supplies the power for LEDs. It has no part in the protection function of the trip unit, and it does not light the display window.

Table 7: DIGITRIP RMS 610 Message Codes

Message	Meaning	Comment
DISC	DISCriminator Trip① (High Initial Current Release)	Breaker tripped instantaneously because phase current exceeded 11 x rating plug current I_n Value.
GNDT	GrouND-fault Trip	Breaker tripped because ground current exceeded Ground Fault protection settings.
HILD	HIgh LoaD Alarm ALARM: Nearing Overload Condition	Phase current has exceeded 85% of Long-Time Current Setting for more than 40 seconds.
INST	INStantaneous Trip①	Breaker tripped instantaneously because phase current exceeded instantaneous protection setting.
LDPU	Long-Time Delay Pick-Up ALARM: Overload Condition in Progress	Phase current has exceeded Long-Time current setting. Trip unit is timing to trip breaker.
LDT	Long-Time Delay Trip (Overload Trip)	Breaker tripped because phase current exceeded Long-Time protection settings.
ROM ERROR	Nonfatal memory error	Protection functions still operate, but may be up to 12% out of tolerance. Replace trip unit at first opportunity.
ORNG	Over RaNGe Trip①② (Current too high to measure.)	Breaker tripped instantaneously because phase current (or ground current) exceeds 28 x rating plug current I_n value.
PLUG	Rating PLUG Problem	Rating Plug is missing, damaged or not well connected. If breaker is closed, it will trip, and the instantaneous/override LED will light. If breaker is open, it will not close.
SDT	Short-Time Delay Trip	Breaker tripped because phase current exceeded Short-Time Delay protection settings.
TEMP	OverTEMPerature Trip	Breaker tripped because ambient temperature of 95 °C exceeded.
TEST	TEST and trip breaker is ready to begin.	Trip unit will begin as soon as you release the push to test button and TEST message will disappear. The breaker will trip, and the cause of trip is displayed.
(blank)	Test (without tripping breaker) is ready to begin. or Trip unit not ON	Trip unit test begins as soon as you release push to test button, and the display shows the elapsed time of test. Control power is out.

Notes:
① In the case of a high-level fault condition where fast tripping is desirable, the trip unit will operate before a complete RMS current value can be calculated. For this reason, the displayed value may be less than the actual RMS fault current.
② In the case of a very high fault current (greater than 28 x I_n), the message ORNG (indicating over range) appears because the trip unit cannot determine the actual value of the fault current.

© 1996 Square D All Rights Reserved

POWERLOGIC DIGITRIP RMS 810D OPERATION

General

This section covers POWERLOGIC DIGITRIP RMS 810D operation that is beyond the scope of the basics covered in “BASIC OPERATION” on page 6. See “PROTECTION SETTINGS” on page 12 for protection settings available depending on the type of unit. In addition to all the features that the DIGITRIP RMS 510 has, the DIGITRIP RMS 810D also has:

- Local four-digit alphanumeric display for
  - — Amperes
  - — Mode of trip
  - — Service trip messages
  - — Energy and power monitoring:
    - Peak demand
    - Present real power
    - Energy consumption
- Direct communications link to the POWERLOGIC Power Monitoring and Control System:
  - — Amperes
  - — Energy and demand information
  - — Remote breaker operation
  - — Service and trip messages
- Options available:
  - — Local high load indication
  - — Remote signal contacts for high load and mode of trip (via the auxiliary trip relay-ATR)

The trip unit uses a custom-designed integrated circuit which includes a microcomputer to perform numeric and logic functions. Figure 19 is a block diagram for the DIGITRIP RMS 810D trip unit.

Four Character Information Display Window

The four-digit alphanumeric display window (Figure 20 on page 25) serves two basic purposes: instrumentation and mode of trip and trouble indication. The information displayed in the window is listed in Table 8 on page 26.

Values Displayed During Normal Service

The alphanumeric display window displays current, power or energy values under normal service conditions and displays coded messages after an alarm condition or after an overcurrent trip operation. The four LEDs left and below the display window (Figure 20 on page 25) identify which current (kA) value is being displayed. Options are: phase A current (I_A), phase B current (I_B), phase C current (I_C), ground current (I_G) if the unit is equipped with the ground fault protection option. The three LEDs on the right identify which Demand value is being displayed. Options are: Peak Power Demand (MW), Present Power Demand (MW or Energy Demand (MWh). Press the Step pushbutton to view the value of the next parameter. Details about values and messages follow in this section.

Current Values

During the normal service conditions, with the circuit breaker closed, the DIGITRIP 810D serves as an ammeter, displaying the individual phase currents.

© 1996 Square D All Rights Reserved

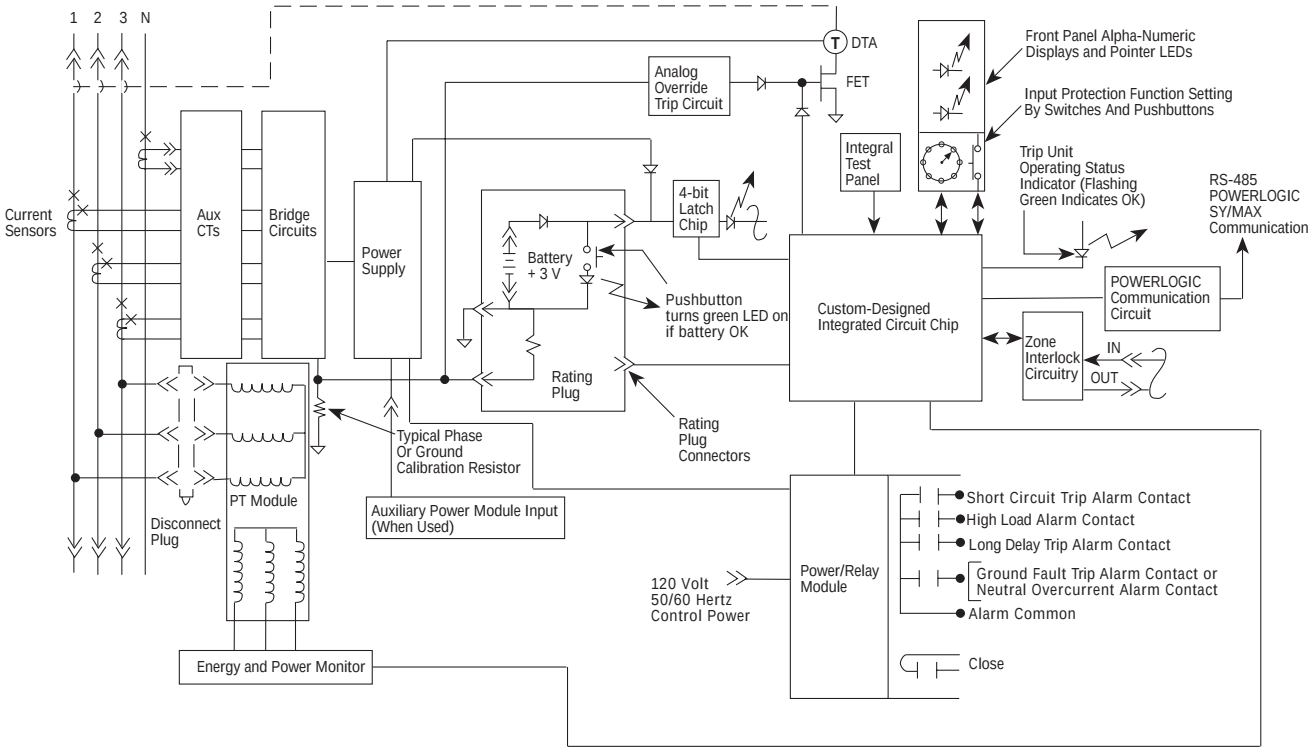

Figure 19: POWERLOGIC DIGITRIP RMS 810D Block Diagram with Circuit Breaker Interface

© 1996 Square D All Rights Reserved

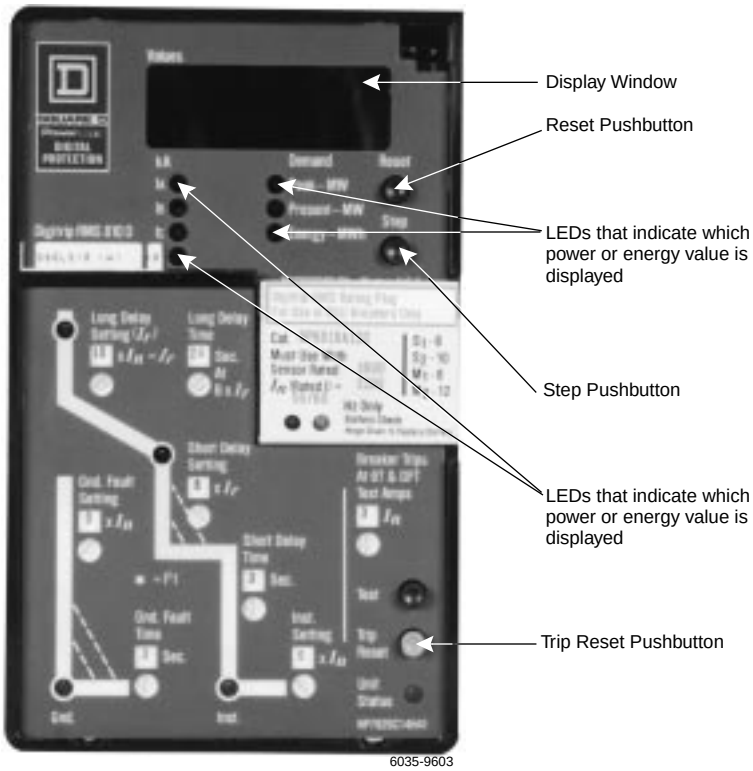

Figure 20: POWERLOG DIGITRIP RMS 810D Trip Unit

(I_A, I_B, I_C) and ground current (I_G), provided the circuit breaker is set up for ground fault protection. Current values are displayed in kA. The value displayed is current in the pole (or ground) indicated by the LED that is on. Press the Step pushbutton to view the values of current in the other phases. The range, accuracy, and wave shape parameters for current values displayed are:

RANGE:	5% to 100% of (Current) Sensor Rating for Type DS and DSII circuit breakers.
ACCURACY:	± 2% of (Current) Sensor Rating for Type DS and DSII circuit breakers.
WAVE SHAPE:	Sinusoidal, (Refer to IEC 947-2 Appendix F; Harmonic content included for True RMS reading.)

© 1996 Square D All Rights Reserved

Power and Energy Values

The DIGITRIP RMS 810D trip unit displays power and energy values. By using the circuit breaker current sensors and an integrally mounted Potential Transformer Module (see “Potential Transformer Module” on page 30) power and energy values are computed and displayed in the four-digit display window on the face of the trip unit.

The power and energy parameter values displayed in the window on the face of the trip unit are:

- Peak Demand in MW (Megawatts)
- Present Real Power in MW (Megawatts)
- Energy (Consumed) in MWh (Megawatt-hours)

Three LEDs as shown indicate which power or energy value is displayed. The same Step pushbutton for changing the displayed values of current is also used to change the displays of power and energy values.

Table 8: POWERLOGIC DIGITRIP RMS 810D Information Functions

	Trip Unit Type					
	LI	LSI	LS	LIG	LSG	LSIG
4-Character LED Display	x	x	x	x	x	x
Current Values:						
Phase A Current (Ia) (kA)	x	x	x	x	x	x
Phase B Current (Ib) (kA)	x	x	x	x	x	x
Phase C Current (Ic) (kA)	x	x	x	x	x	x
Ground Current (Ig) (kA)				x	x	x
Power and Energy Values:						
Peak Power Demand (MW)	x	x	x	x	x	x
Present Real Power	x	x	x	x	x	x
Reverse Power Flow	x	x	x	x	x	x
Energy Consumption (MWh)	x	x	x	x	x	x
Reverse Energy Consumption	x	x	x	x	x	x
Local Messages:						
DISC = DISCriminator Trip			x		x	
EXTT = EXTernal Trip	x	x	x	x	x	x
GNDT = GrouND Trip				x	x	x
HILD = High LoaD Alarm	x	x	x	x	x	x
INST = INStantaneous Trip	x	x		x		x
LDPU = Long-Time Delay Pickup	x	x	x	x	x	x
LDT = Long-Time Delay Trip	x	x	x	x	x	x
NPOW = Negative POWer Flow	x	x	x	x	x	x
ORNG = OverRaNGe Trip	x	x	x	x	x	x
PLUG = Rating PLUG Problem	x	x	x	x	x	x
SDT = Short-Time Delay Trip		x	x		x	x
TEMP = OverTEMPerature Trip	x	x	x	x	x	x
TEST = TEST Ready to Begin	x	x	x	x	x	x

© 1996 Square D All Rights Reserved

The Peak MW parameter is a peak, real power demand based on a sampling window of fifteen (15) minutes. The Peak MW displayed value is the highest or peak real power demand since the black Reset pushbutton (Figure 20 on page 25) was last pressed, the circuit breaker was last withdrawn, or last loss of control power. The average real power demand is calculated once every 15 minutes and compared with the last peak value. If the new demand value is higher, it will become the new peak demand value. When the trip unit is first energized, there is a delay before the first nonzero value is displayed. To reset the peak demand value shown in the display window back to zero, press the black Reset pushbutton.

NOTE: If 120 Vac control power is lost to the Power/Relay Module, and if the current through the circuit breaker drops below about 20% of the frame/ current sensor rating, the peak demand value is lost.

The Present MW is basically an instantaneous power value that is updated every second. To view the Present MW value in the display window continuously, press the Step pushbutton several times until the LED next to Present MW is on. The range, assumptions, and accuracy parameters for peak and present power demand values displayed are:

RANGE:	0 to 9.999 MW
ASSUMES:	5% < Current < 125% of (Current) Sensor Rating for Type DS and DSII circuit breakers.
SAMPLING WINDOW:	15 minutes for Peak MW, 1 second for Present MW
ACCURACY:	+3% of (Current Sensor Rating x 600 V) for Type DS and DSII circuit breakers.

The Energy parameter is the summation of the average power over time and it is expressed in megawatt-hours (MWh). The value is updated every second. The value cannot be reset locally, but if the maximum value is reached, the display automatically rolls over to 00.00 MWh.

The range and accuracy parameters for energy values displayed are:

RANGE:	0 to 999.9 MWh if I_n < 1000 A
ASSUMES:	5% < Current < 125% of (Current) Sensor Rating for Type DS and DSII circuit breakers.
ACCURACY:	+4% of (Current Sensor Rating x 600 V x time) for Type DS and DSII circuit breakers.

The energy value is stored in the trip unit memory. As long as the 120 Vac control power is maintained to the Power/Relay Module, it can be viewed. If the 120 Vac control power is lost and then is restored, the energy value is restored too.

The DIGITRIP RMS 810D trip unit presumes that power is flowing into the “top” and out of the bottom of the circuit breaker (positive flow of power). If the power flows in the opposite direction, that is, bottom to top, the value of power is not displayed continuously. Instead, the power value in the display window alternates with the coded message NPOW. This message, alternating with the value, indicates the amount of power flowing out of the top of the circuit breaker. This condition occurs when a main circuit breaker is “reverse fed” and can frequently occur for tie circuit breakers. To defeat the NPOW message, an appropriate jumper must be inserted. Contact Square D Field Services or your local Square D representative.

© 1996 Square D All Rights Reserved

Messages Displayed after Alarm or Trip

After an alarm condition or circuit breaker trip operation occurs, one of the coded messages listed in Table 9 appears in the display window, provided control power is still available for the Power/Relay Module. See “POWER/ RELAY MODULE” on page 38. When an alarm condition occurs, the operator has time to take action, such as reducing the load, to correct the situation. The message remains in the display window until the Step pushbutton is pressed. Then the message disappears and the values of currents (kA) at the moment can be viewed in the window.

NOTE: Press the Step pushbutton several times to verify that the values of all the currents appear. The first value displayed may not be the highest.

Following a circuit breaker trip, the display window indicates the reason for trip, using coded messages such as, INST (Instantaneous Trip), LDT (Long Delay Trip), and so forth. As with the alarm function, pressing the Step pushbutton clears the reason for trip message. Then the display window shows the values of current at the time of trip. The values remain in memory, and the LED indicating the reason for trip stays on until the trip unit is reset by pressing the red Trip Reset pushbutton.

NOTE: Record all values of interest, and note which LEDs are lit before resetting the trip unit. Correct the cause of the overload or fault before resetting the trip unit.

The LOCKOUT after trip feature requires the trip unit to be reset before the breaker can be closed again.

For examples of how to interpret the display after an overload and after a short-circuit, see “APPENDIX B” on page 51.

Rating Plug Missing or Disconnected Indication

If the rating plug is missing or not well connected, PLUG appears in the display and the instantaneous/override LED is on. If the circuit breaker is closed, it will trip. If it is open, it will remain trip-free, as long as 120 Vac control power is available to the Power/Relay Module. Even if control power is lost, and the circuit breaker is reclosed before the rating plug condition is corrected, the trip unit will trip the circuit breaker again. A backup battery provides power for LEDs when external control power to the Power/Relay module is not available.

NOTE: The battery only supplies power to the LEDs. It has no part in the protection functions of the trip unit, and it does not light the display window.

© 1996 Square D All Rights Reserved

Table 9: POWERLOGIC DIGITRIP RMS 810D Message Codes

Message	Meaning	Comment
DISC	DISCriminator Trip① (High Initial Current Release)	Breaker tripped instantaneously because phase current exceeded 11 x rating plug current I_n Value.
EXTT	EXTernal Trip	Breaker tripped due to external communications control signal for example from POWERLOGIC.
GNDT	GrouND-fault Trip	Breaker tripped because ground current exceeded Ground Fault protection settings.
HILD	HIgh LoaD Alarm ALARM: Nearing Overload Condition	Phase current has exceeded 85% of Long-Time Current Setting for more than 40 seconds.
INST	INStantaneous Trip①	Breaker tripped instantaneously because phase current exceeded instantaneous protection setting.
LDPU	Long-Time Delay Pick-Up ALARM: Overload Condition in Progress	Phase current has exceeded Long-Time current setting. Trip unit is timing to trip breaker.
LDT	Long-Time Delay Trip (Overload Trip)	Breaker tripped because phase current exceeded Long-Time protection settings.
NPOW	Negative POWer flow	Net power is flowing into “load” side (bottom) of breaker, and out from “line” side (top) of the breaker.
ORNG	Over RaNGe Trip ①② (Current too high to measure.)	Breaker tripped instantaneously because phase current (or ground current) exceeds 28 x rating plug current I_n value.
PLUG	Rating PLUG Problem	Rating Plug is missing, damaged or not well connected. If breaker is closed, it will trip, and the instantaneous/override LED will light. If breaker is open, it will not close.
SDT	Short-Time Delay Trip	Breaker tripped because phase current exceeded Short-Time Delay protection settings.
TEMP	OverTEMPerature Trip	Circuit breaker tripped because ambient temperature of 95 °C exceeded.
TEST	TEST and trip breaker is ready to begin.	Trip unit will begin as soon as you release the push to test button and TEST message will disappear. The circuit breaker will trip, and the cause of trip is displayed.
(blank)	Test (without tripping breaker) is ready to begin or Trip unit not ON	Trip unit test begin as soon as you release push to test button, and the display shows the elapsed time of test. Control power is out.

Notes:

① In the case of a high-level fault condition where fast tripping is desirable, the trip unit will operate before a complete RMS current value can be calculated. For this reason, the displayed value may be less than the actual RMS fault current.

② In the case of a very high fault current (greater than 28 x I_n), the message ORNG (indicating over range) appears because the trip unit cannot determine the actual value of the fault current.

© 1996 Square D All Rights Reserved

Potential Transformer Module

The Potential Transformer Module (PTM) is also separate from the POWERLOGIC DIGITRIP RMS 810D trip unit and is not required for the trip unit to perform its protection functions. The Potential Transformer Module provides three-phase primary voltage information necessary for the trip unit to calculate power and energy values.

The Potential Transformer Module primary terminals are suitable for all system voltage ratings up through 600 V 50/60 Hz, and are connected to the primary phase conductors inside the circuit breaker. The PTM provides stepped down voltage signals to input terminals V_A, V_B, V_C, and V_N on the rear of the POWERLOGIC DIGITRIP RMS 810D trip unit housing.

The primary voltage connection to the Potential Transformer Module is made through a disconnect plug that can be located either on the module, as shown in Figure 21, or on the side of the circuit breaker.

Communication Power Module

The Communication Power Module supplies an isolated voltage for the RS-485 communications circuitry. It is housed in an enclosure identical to that of the Power Relay Module and mounted on the DS/DSL and DSII/DSLII breaker adjacent to the trip unit. It is not required for the trip unit to perform its protective functions.

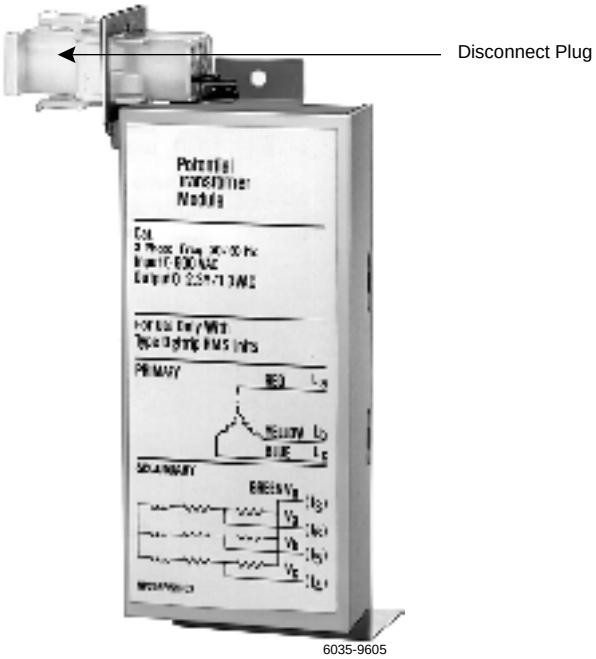

Figure 21: Potential Transformer Module

© 1996 Square D All Rights Reserved

TRIP UNIT COMMUNICATIONS: POWERLOGIC DIGITRIP RMS 810D

The POWERLOGIC DIGITRIP RMS 810D trip unit can be a fully integrated part of the POWERLOGIC Power Monitoring and Control System manufactured by Square D. The trip unit is equipped with RS-485 communications for connection to the POWERLOGIC system. Over this communications link, a wide variety of metering and trip data can be communicated to aid facility operation. In addition, users can remotely reset and operate the circuit breaker by commands sent over the communication network.

There is a wide variety of networking options available when designing a communications network for the POWERLOGIC system with POWERLOGIC DIGITRIP RMS 810D trip units. The options range from simple, shielded, two twisted pairs of wire to fiber optic and wireless Ethernet. Contact your Square D representative for more information about communications options.

The trip unit can be connected by the communication network to any number of display and control devices. Examples include:

- The POWERLOGIC System Display, a compact and versatile data display unit ideal for installation in the switchgear or electrical room.

  Using the system display, a user can observe a wide variety of trip unit data from up to 32 circuit breakers. The data includes: phase currents, power, energy, demand, protective settings, cause of trip, and more. In addition, resets can be done from the system display.
- Personal computers running POWERLOGIC software, such as System Manager™.

  This versatile software, written by Square D expressly for power monitoring, is a powerful tool for display, alarming, graphics, and more. The software makes it easy to pull together data and control for a whole electric plant in one spot and in real time.
- Programmable Logic Controllers (PLCs), which are often used when automatic control sequences are desired.

  PLCs can be programmed to read information from trip units or circuit monitors, make decisions, and initiate control actions. The PLCs can both read data from the trip units and send open and close commands over the communication network. Automatic control can be used for tasks such as demand control, load shedding, emergency power transfer, power factor control, and others.

Trip Unit Address and Baud Rate

Each POWERLOGIC DIGITRIP RMS 810D trip unit must be given a unique network address so that data can be properly routed over the communication network. Also, the trip unit can communicate at any of the five following baud rates: 1200, 2400, 4800, 9600, and 19,200 baud. The baud rate must be set the same as all other trip units and devices on the network to successfully send and receive data. The default address is 1, and the default baud rate is 9600. These can be easily changed by the user in the field.

To change the trip unit address or baud rate:

NOTE: The circuit breaker need not be open and may be carrying current.

© 1996 Square D All Rights Reserved

1. Determine present settings by pressing and holding the red Trip Reset pushbutton. After about five seconds the kA, MW, or MWh value disappears. In its place, a letter appears on the left side of the display and a number appears on the right side. Letters correspond to these baud rates:

   A – 1200 baud

   B – 2400 baud

   C– 4800 baud

   D– 9600 baud

   E– 19,200 baud

   The number is the network address of the trip unit.
2. Change the trip unit address or baud settings as follows:

- Higher address – To change the address to a higher number, press the black Reset pushbutton near the display window while holding the red Trip Reset pushbutton. The address increases by one unit each time the Reset pushbutton is pressed. Pressing and holding the black Reset pushbutton increases the address continuously, slowly at first, and then faster.
- Lower address – To change the address to a lower number, press the Step pushbutton near the display window while holding the red Trip Reset pushbutton. The address decreases by one each time the Step pushbutton is pressed. Pressing and holding the Step pushbutton decreases the address continuously, slowly at first, and then faster.
- Baud rate – To change the baud rate, press the Test pushbutton while holding the red Trip Reset pushbutton. The letter corresponding to the baud rate steps up alphabetically each time the Test pushbutton is pressed.

3. When the address and baud rate code in the display window are correct, release the red Trip Reset pushbutton to save the values into the nonvolatile memory of the trip unit. The kA, MW, or MWh value will then return to the display window. If control power is lost, the trip unit will retain its (new) address and baud rate.

NOTE: If control power is lost while the address or baud rate is being changed, that is, while the red Trip Reset pushbutton is still being held in, the display goes blank. When control power is restored, the trip unit retains the previous address and baud rate values, as though there had been no attempt to change them.

NOTE: Because trip units and circuit breakers of the same rating are interchangeable, if more than one has been withdrawn for maintenance at the same time, it is critical that each be returned to its correct cell location so that the circuit has the correct address. For example, if two identical breakers (one with a trip unit address of “1” and the other with an address of “10”) were switched, there would be confusion. Information coming from the “1” trip unit, as well as commands going to the “1” trip unit, will actually involve the “10” circuit, and vice versa.

© 1996 Square D All Rights Reserved

Personal Computer Workstations

A personal computer can be used as a POWERLOGIC workstation simply by installing POWERLOGIC software and connecting to the same data network being used by the POWERLOGIC DIGITRIP RMS 810D trip units. For small networks (up to 32 trip units and a single computer), the network can be connected to the computer serial port with an inexpensive RS-232/485 converter. The computer can be connected to larger networks by installing a SY/LINK® communication card in a free ISA compatible slot on the computer. The SY/LINK has a communications coprocessor that unloads the computer's microprocessor and permits network speeds of up to 500 kbaud.

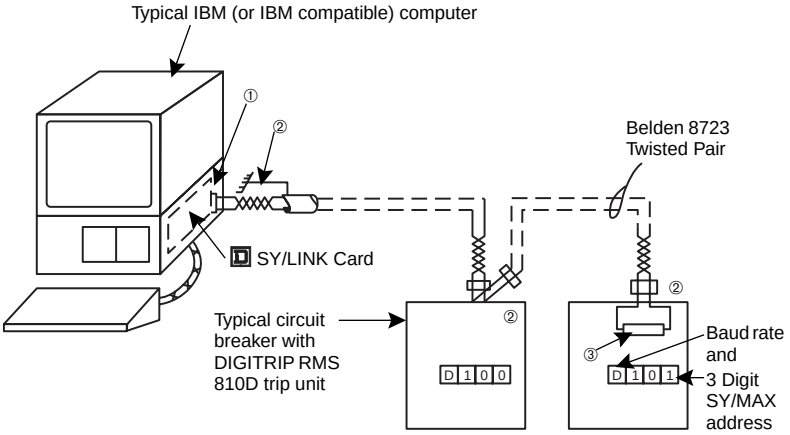

① DB-9M connection to MCA-485 and SY/LINK card.
② Shielding is grounded at the computer only through the SY/LINK card.
Where devices are daisy-chained, interconnect shielding, but do not ground the connection.
③ MCT-485 termination device required on last circuit breaker or POWERLOGIC device.

6035-98162A

Figure 22: POWERLOGIC with Personal Computer Workstation

A system display (must be model SD-300 or SD-320) can be installed in the same switchgear with the circuit breakers, or at a remote location, to monitor the information from any of the POWERLOGIC DIGITRIP RMS 810D trip units. The connections in the network are made by twisted pair cable. The baud rate must be set the same for all trip units and the system display.

6035-98163

Figure 23: System Display Model SD-300

© 1996 Square D All Rights Reserved

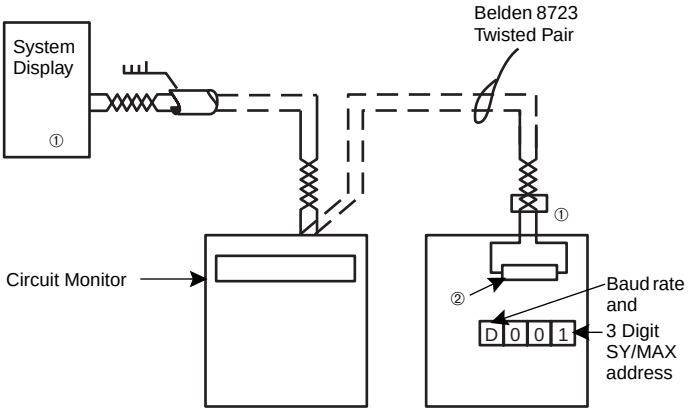

Note: Ok to mix circuit monitors, POWERLOGIC DIGITRIP 810D Trip Units, and other POWERLOGIC devices.

① Shielding is grounded at the computer only through the SY/LINK card.
Where devices are daisy-chained, interconnect shielding, but do not ground the connection.
② MCT-485 termination device required on last circuit breaker or POWERLOGIC device.

6035-98164

Figure 24: System Display Connections

Personal Computer Workstations and System Display Combination

A virtually unlimited number of personal computers and system displays can be connected to the power monitoring network. Each has equal access to data from any POWERLOGIC DIGITRIP RMS 810D trip unit connected to the network. Network Interface Modules (NIMs) or SY/LINK cards (for computers) are used to connect to the network.

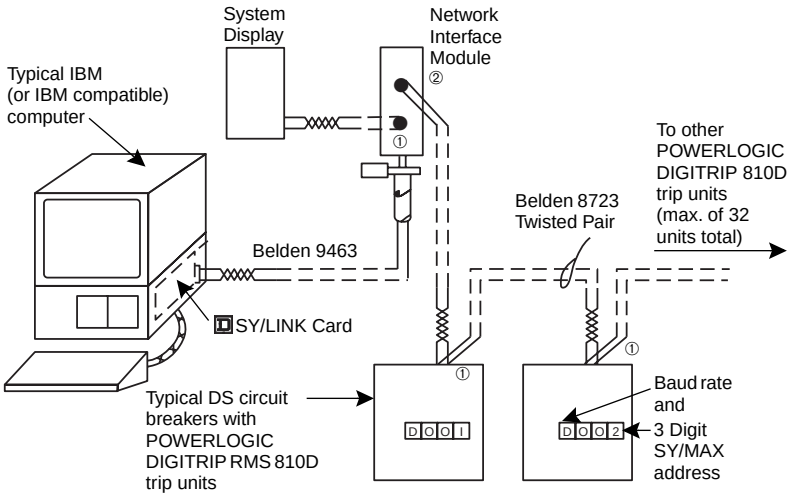

① Shielding as is accomplished through the Network Interface Module.
Where devices are daisy-chained, interconnect shielding, but do not ground the connection.
② DB-9M connection to MCA-485 and Network Interface Module.

6035-98165A

Figure 25: POWERLOGIC Network with Personal Computer Workstation and System Display

© 1996 Square D All Rights Reserved

Network Connections

POWERLOGIC communications are based on, and are compatible with, the SY/MAX® communications system. This system was developed and has been used for critical factory automation applications for many years. The POWERLOGIC system uses two levels of communication.

At the field device level, used by trip units and system displays, an RS-485 protocol is used. RS-485 is a very commonly used physical protocol, which allows easy connection to a variety of commercially available modems. Typically, a twisted pair cable (Belden 8723 or equivalent) is used at this level. The cable connects devices in a daisy chain fashion. A termination device is installed at the final device on the daisy chain (MCT-485). Transmission rates of up to 19.2 kbaud and distances of up to 10,000 feet are supported.

A high-speed LAN is used as the backbone of the POWERLOGIC communication system. Typically, this LAN is the SY/NET® network. Square D developed SY/NET especially for rugged industrial environments and features high resistance to noise and deterministic access by all connected devices. Up to 100 NIMs or computers can be connected directly to the LAN. In addition, several networks can be interconnected. This extends total connected device counts into the millions. The cable used most commonly is Belden 9463 (or equivalent) twinax cable. Speeds of up to 500 kbaud and distances of up to 15,000 feet are supported.

As an alternative, Square D has pioneered the use of Ethernet in power monitoring systems. Ethernet can be used in place of SY/NET, and Ethernet network interface modules are used in placed of conventional NIMs and SY/LINK cards. Ethernet has the advantages of being faster and more commonly found in facilities. On the other hand, it was not designed for industrial use, communications access is non-deterministic, and maximum run lengths are often shorter. However, Ethernet is a useful option for some users.

Information Communicated by the POWERLOGIC DIGITRIP RMS 810D

The DIGITRIP RMS 810D uses microprocessors to measure electrical parameters, continuously ascertain the need for protective action, and meter and communicate circuit values to the outside world. Values for electrical quantities are continually updated and stored in local memory. The values in memory can be read and displayed by a variety of devices convenient to plant engineers, electricians, and operators. Display devices include the system displays and personal computers described above.

Information available for remote display includes:

- Status of circuit breaker: closed, open, or tripped
- All protection settings (See “PROTECTION SETTINGS” on page 12)
- All information displayed in the trip unit window
- Phase and ground or neutral current values
- Power and energy demand parameter values

The information available through the SY/MAX communication system is greater than that available locally through the trip unit display. For example, at a system display or personal computer, it is possible to view the present system power factor, the time of trip event, and trip event counter, even though these values are not available for local display in the trip unit window.

© 1996 Square D All Rights Reserved

Table 10: POWERLOGIC DIGITRIP RMS 810D Communications

	LI	LSI	LS	LIG	LSG	LSIG
REMOTE INFORMATION via Communications Link	x	x	x	x	x	x
View Circuit Breaker Status:						
OPEN/CLOSED/TRIPPED	x	x	x	x	x	x
Address Register & Baud Rate	x	x	x	x	x	x
View Trip Event Values:						
Trip Event Time	r	r	r	r	r	r
Trip Event Counter	r	r	r	r	r	r
View Protection Settings:						
Long Time Delay:						
Current Setting (Pickup)	x	x	x	x	x	x
Time Delay Setting	x	x	x	x	x	x
Short Time Delay:						
Current Setting (Pickup)		x	x		x	x
Time Delay Setting		x	x		x	x
Opt. I squared T Curve Shape		x	x		x	x
Instantaneous:						
Current Setting (Pickup)	x	x		x		x
DISCriminator (11 x) IN or OUT			x		x	
Ground Fault:						
Current Setting (Pickup)				x	x	x
Time Delay Setting				x	x	x
Opt. I squared T Curve Shape				x	x	x
View Current Values:						
Phase A Current (Ia) (kA)	x	x	x	x	x	x
Phase B Current (Ib) (kA)	x	x	x	x	x	x
Phase C Current (Ic) (kA)	x	x	x	x	x	x
Ground Current (Ig) (kA)				x	x	x
Neutral Current (Id) (kA)	n	n	n			
View Power/Energy Values:						
Peak Power Demand (MW)	x	x	x	x	x	x
Present Power Demand (MW)	x	x	x	x	x	x
Reverse Power Flow	x	x	x	x	x	x
Energy Consumption (MWh)	x	x	x	x	x	x
Reverse Energy Consumption	x	x	x	x	x	x
View Power Factor Value:	r	r	r	r	r	r
View Remote Messages:						
DISC = DISCriminator Trip			x		x	
EXTT = EXTernal Trip	x	x	x	x	x	x
GNDT - GrouND Trip				x	x	x
HILD = High LoaD Alarm	x	x	x	x	x	x
INST = INStantaneous Trip	x	x		x		x
LDPU = Long-Time Delay Pick-Up	x	x	x	x	x	x
LDT = Long-Time Delay Trip	x	x	x	x	x	x
NORM = Normal	r	r	r	r	r	r
NPOW = Negative POWer Flow	x	x	x	x	x	x
ORNG = OverRaNGe Trip	x	x	x	x	x	x
PLUG = Rating PLUG Problem	x	x	x	x	x	x
SDT = Short-Time Delay Trip		x	x		x	x
NRES = Communications Failure	r	r	r	r	r	r
TEMP = OverTEMPerature Trip	x	x	x	x	x	x
TEST = TEST Ready to Begin	x	x	x	x	x	x
Remote control via POWERLOGIC commun.	x	x	x	x	x	x
TRIP (OPEN) Circuit Breaker Command	x	x	x	x	x	x
CLOSE Circuit Breaker Command	*	*	*	*	*	*
RESET TRIP UNIT Command	x	x	x	x	x	x
RESET Demand, Energy, Trip Event	x	x	x	x	x	x

LEGEND:
x = Function included.
r = This information can be viewed only remotely by POWERLOGIC.
* = Requires optional electrical close or spring release option with circuit breaker, and the trip unit may have to be reset before the circuit breaker can close.

© 1996 Square D All Rights Reserved

System Power (Remote)

The POWERLOGIC DIGITRIP RMS 810D trip unit can send the present value of the system power factor to a remote terminal even though system power factor is not available for display locally in the trip unit window. The range, assumptions, and accuracy for the system power factor function values are:

RANGE:	from -0.5 (lagging) to +0.5 (leading)
ASSUMES:	balanced three-phase load, per ANSI Standard C12.1 - 1988
CURRENT:	>20% of (current) sensor rating for Type DS and DSII Circuit Breakers
ACCURACY:	+2.0%

Remote Closing and Tripping of the Circuit Breaker

The POWERLOGIC DIGITRIP RMS 810D trip unit can respond to commands from the computer workstation to trip the circuit breaker remotely. Additionally, if the circuit breaker has been equipped with the applicable optional electrical operator or spring release feature, the POWERLOGIC DIGITRIP RMS 810D trip unit can respond to commands from the computer workstation to close the circuit breaker remotely. After executing the command to trip the circuit breaker, the POWERLOGIC DIGITRIP RMS 810D trip unit displays EXTT and sends back the EXTT message to the computer workstation.

Remote Resetting of the Trip Unit

Because the automatic LOCKOUT-after-trip feature of the POWERLOGIC of DIGITRIP RMS 810D trip unit maintains the circuit breaker in a trip-free condition, the trip unit must be reset after each trip operation (whether initiated by overcurrent conditions or by command from a computer workstation), before the breaker can be closed again. The reset can be accomplished either locally by pressing and releasing the red Trip Reset pushbutton, or remotely by command from a computer workstation.

In addition to resetting the trip unit, the POWERLOGIC communications capability provides a means for resetting several parameter values stored in the memory of the trip unit. Using the proper commands, the user can reset the following values remotely:

Peak Demand Value (MW)

Energy Demand Value (MWh)

Min/Max Values

⚠ WARNING

HAZARD OF PERSONAL INJURY OF EQUIPMENT DAMAGE

Before maintenance or repair work, provide permissive control switches, or other means, locally at the circuit breaker for maintenance personnel to use in controlling remote close or trip signals.

Failure to follow this instruction can result in death or serious injury.

© 1996 Square D All Rights Reserved

POWER/RELAY MODULE

(DIGITRIP RMS 610 AND POWERLOGIC DIGITRIP RMS 810D)

Power/Relay Module General Information Both Models

The Power/Relay Module (PRM), Figure 26, is separate from the DIGITRIP RMS 610 and POWERLOGIC DIGITRIP RMS 810D trip units, and is not required for the trip units to perform their protection functions. The Power/Relay Module performs two functions. First, it uses available external control power (120 V 50/60 Hz ac, 6 VA) to operate the display window, communications circuitry, and reason for trip LEDs. Second, it has internal signal relays for use by other devices in the control scheme at locations remote from the circuit breaker. The internal relays operate when the trip unit detects the following conditions:

- High Load Alarm
- Long Delay Trip Alarm
- Ground Fault Trip Alarm (Types LIG, LSG, LSIG)
- Short-Circuit Trip Alarm

Each relay contact is rated for 120 V, 50/60 Hz ac, 1.0 ampere.

The High Load Alarm contact operates after the load current has exceeded 85% of the long delay current setting, I_r, for 40 seconds. The 40-second delay allows the system to ride through momentary high load conditions and avoid nuisance alarms.

6035-98166

Figure 26: Power/Relay Module

The Long Delay Trip Alarm contact operates after the circuit breaker trips because of overload conditions that exceeded the Long Delay Trip settings.

The Short-Circuit Trip Alarm contact operates after the circuit breaker trips because of an INSTantaneous trip, Short-Delay trip, DIScriminator trip, or a Fixed Instantaneous OverRIDe trip, as applicable.

NOTE: On the DIGITRIP RMS 610, a rating plug trip that causes a circuit breaker to trip can also operate the Short Circuit Trip Alarm.

© 1996 Square D All Rights Reserved

Even without available external control power, if the load current through the circuit breaker exceeds approximately 20% (40% if single phase) of the frame/current sensor rating, the LED flashes on and off each second. This indicates that the trip unit is energized and operating properly, and that all protection functions are working. However, the display window remains dark.

NOTE: If 120 Vac control power is lost to the Power/Relay Module, the LOCKOUT after trip resets and the circuit breaker can be closed again.

DIGITRIP RMS 610 Power/Relay Module Only

For LSG, LIG, and LSIG type DIGITRIP RMS 610 trip units, the ground fault trip alarm contact operates after the circuit breaker trips because the Ground Fault protection settings are exceeded. For LS, LI, LSI type DIGITRIP RMS 610 trip units, the Neutral Current Alarm contact operates when the neutral current setting exceeds the Long Delay Current protection setting, I_r.

POWERLOGIC DIGITRIP RMS 810D Power/Relay Module Only

On circuit breakers with the POWERLOGIC DIGITRIP RMS 810D trip unit the Power/Relay Module also contains the CLOSE contact, which operates the closing release of the circuit breaker, on command from the POWERLOGIC system. See“Remote Closing and Tripping of the Circuit Breaker” on page 37.

The Ground Fault Trip Alarm contact operates after the breaker trips because of conditions that exceed the Ground Fault protection settings.

NOTE: The POWERLOGIC Digitrip RMS 810D also uses a separate communications power module. See ““Communication Power Module” on page 30.

AUXILIARY POWER MODULE

The Auxiliary Power Module (APM), catalog number PRTAAPM, illustrated in Figure 27, is an encapsulated power supply that requires a 120 Vac input at either 50 or 60 Hz. It provides an output of 32 Vdc (nominal 40 Vdc open circuit), which can be used for testing a DIGITRIP RMS trip unit.

6035-9607

Figure 27: Auxiliary Power Module

The drawout circuit breaker can also be conveniently set and tested while it is in the test, disconnect, or withdrawn positions by using the APM.

The APM has a unique plug-in connector suitable only for plugging into the keyed receptacle in the upper right corner of a DIGITRIP RMS trip unit. This does not allow the use of the wrong type of power module.

© 1996 Square D All Rights Reserved

TEST PROCEDURE

General

All units have an integral test panel in the lower right corner (Figure 28). Several no-trip settings are provided to check the trip unit operation without actually tripping the circuit breaker.

⚠ WARNING

HAZARD OF PERSONAL INJURY OR PRODUCT DAMAGE

- Do not locally or remotely trip the circuit breaker during testing while it is in service and carrying load current.
- Any tripping operation causes disruption of service. Inform personnel in advance of tripping operations that could switch connected equipment.
- When circuit breaker testing will trip the circuit breaker, test only in the test or disconnected position or while the circuit breaker is on a test bench.

Failure to follow these instructions can result in death or serious injury.

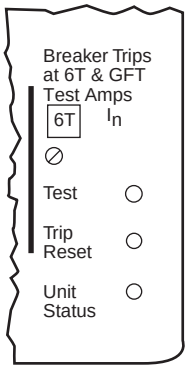

Available Test Amps Settings

6T = phase current test at $6xI_n$ and trips the circuit breaker.

1, 2, 3, 8 or 10 x I_n = phase current test and does not trip the circuit breaker.

GFT = ground current test and trips the circuit breaker.

GF = ground current test and does not trip the circuit breaker

6035-98167

Figure 28: Integral Test Panel (Lower Right Corner of Trip Unit)

To preserve the primary protection function of the trip unit, in-service testing under trip or no-trip conditions is only allowed at load current values no greater than 50% of the long delay current setting, I_r. The trip unit does not execute in-service testing when the load current exceeds 50% of I_r.

The DIGITRIP RMS trip unit is completely self-powered, using energy from the current sensors installed in the circuit breaker. Conduct all in-service tests with the auxiliary control power module plugged into the trip unit. Using auxiliary control power eliminates the difficulties caused by load current levels that are too low to operate the trip unit.

When to Test

Tests can be conducted with the circuit breaker in the connected position while carrying load current. However, restrict circuit breaker in-service trip tests to maintenance periods during minimum load conditions. Testing before start-up should be done with the circuit breaker out of its cell, or in the test, disconnected, or withdrawn (removed) cell positions.

NOTE: Since time-current settings are based on specified system coordination and protection schemes, do not alter the protection settings during any routine test sequence.

© 1996 Square D All Rights Reserved

Test Provision

Six different Test Amps settings (1, 2, 3, 6T, 8, and 10 x I_n) are provided to test the phase elements of the trip unit. Two settings (GF, GFT) are provided to test the ground elements.

> **⚠ CAUTION**
>
> **HAZARD OF EQUIPMENT DAMAGE**
>
> A setting of either 6T or GFT trips the circuit breaker. Do not trip the unit while it is in service.
>
> **Failure to follow this instruction can result in injury or equipment damage.**

For any combination of the phase protection settings, an appropriate no-trip condition can be set to test the long time, short time, and instantaneous trip setting, without tripping the circuit breaker. In the GF test position, the level of test current, based on In, is adequate to demonstrate the trip unit operating condition without tripping the circuit breaker. This is a functional check only, not a calibration.

Preparation for Testing

- Before starting any test sequence, be sure that the Unit Status LED in the lower right corner of the trip unit (Figure 28 on page 40) is blinking on and off about once each second. This indicates that the trip unit is functioning normally. If the Unit Status LED is not blinking, connect an Auxiliary Power Module. If an APM is already connected, verify that it is plugged in correctly.
- If the circuit breaker is carrying current, check for the following conditions.
  - — The current is not less than 10% of the circuit breaker frame (or current sensor) rating. Be sure the Unit Status LED is blinking on and off (indicating that there is enough current to power the trip unit). If the Unit Status LED is either lit steadily (not blinking) or is off, there is not enough current to power the trip unit. Install an APM before proceeding with the test.
  - — The current is not more than 50% of the long delay current setting (I_r). The trip unit will not execute test instructions when it senses that the current through the circuit breaker exceeds the 50% level.
- When performing tests on the long delay element, be aware that, in addition to the standard protection element, the DIGITRIP RMS trip unit also has Long Time Memory. The LTM protects load circuits from the effects of repeated overload conditions. See “Long Delay Time Settings” on page 13. The LTM advances the long delay trip time if multiple long delay time tests are performed repeatedly. This same effect occurs when making single-phase tests on each pole of a circuit breaker in succession. If the operator is experienced in testing with accelerated trip timing, the results of tests performed in quick succession may be acceptable. However, if there is any question, wait about ten minutes after a long delay trip for the LTM to reset, then check the next pole.
- When using an external single-phase current source to test low level ground fault settings, supply auxiliary power to the trip unit via the Auxiliary Power Module. If auxiliary power is not supplied and the single-phase test current is low, it may appear as if the trip unit does not respond until the current rises well above the set value. This could incorrectly indicate an error in the trip unit. This occurs because the single-phase test current is not a good simulation of the normal 3-phase circuit. In a 3-phase current, the trip unit will perform correctly. Use the APM to supply auxiliary power for correct trip unit performance whenever single-phase tests are made.

© 1996 Square D All Rights Reserved

- Disconnecting the PTM before applying voltage to the circuit breaker primary conductors:

⚠ WARNING

HAZARD OF PERSONAL INJURY

Unplug the voltage disconnect plug from the PTM to isolate the trip unit before applying voltage to the circuit breaker primary conductors, such as for dielectric withstand testing of the circuit breaker.

Failure to follow this instruction can result in death or serious injury.

Before applying voltage to the circuit breaker primary conductors, such as for dielectric withstand testing of the circuit breaker, unplug the voltage disconnect plug from the PTM to avoid personal injury.

Control Power

When testing the trip unit, an optional Auxiliary Power Module is recommended. See “AUXILIARY POWER MODULE” on page 39. This APM, which operates from a separate 120 Vac supply, can be used when a drawout circuit breaker is in any of the four positions: connected, test, disconnected, or withdrawn (removed).

Plug in the APM to ensure that control power is available for testing. When the APM is properly connected, the Unit Status LED blinks on and off about once per second.

Testing without Tripping the Circuit Breaker

1. Turn the Test Amps selector switch (Figure 28 on page 40) to one of the six no-trip test settings: 1, 2, 3, 8, or 10 x I_n, or GF.
2. Press the Test pushbutton and release it to begin the test.
3. If any of the protection settings is less than the selected no-trip test value, the corresponding LED comes on, indicating the test is complete. During the long delay tests, the Long Delay LED flashes.
4. Reset the trip unit by pressing the red Trip Reset pushbutton. All LEDs that came on during the no-trip test should turn off. If any remain on, the trip unit has a problem. Contact the factory, your local Square D sales office, or Square D Field Services.

If an actual overload or fault condition occurs during an in-service no-trip test sequence, the protection function overrides the test function. The circuit breaker trips automatically according to the time-current settings.

The Trip Reset pushbutton may be pressed at any time. However, any test in progress will be aborted.

© 1996 Square D All Rights Reserved

Tripping the Circuit Breaker

1. Verify that power to the circuit breaker is turned off.

⚠ WARNING

HAZARD OF PERSONAL INJURY OR PRODUCT DAMAGE

- Do not locally or remotely trip the circuit breaker during testing while it is in service and carrying load current.
- Any tripping operation causes disruption of service. Inform personnel in advance of tripping operations that could switch connected equipment.
- When circuit breaker testing will trip the circuit breaker, test only in the test or disconnnected position or while the circuit breaker is on a test bench.

Failure to follow these instructions can result in death or serious injury.

NOTE: To perform the circuit breaker trip test when load current is flowing, make sure the circuit breaker is carrying no more than 50% of the long delay current setting I_r. The trip unit will not execute test instructions if the load current exceeds 50% of I_r.

2. Turn the Test Amps selector switch (Figure 28 on page 40) to one of the two trip test settings: 6T or GFT.
3. Press the TEST pushbutton and release it to begin the test.
4. If any of the protection settings is less than the selected test ampere value, the circuit breaker will trip. The corresponding LED comes on.
5. Press and release the Trip Reset pushbutton to reset the trip unit. All LEDs that came on during the trip test should turn off.

© 1996 Square D All Rights Reserved

MAINTENANCE

Field maintenance is limited to changing the battery in the DIGITRIP unit. The battery is located in the rating plug. It is a long life, lithium photo type. The battery is not part of any protection function. It only provides power for LEDs to indicate the reason the circuit breaker tripped.

Battery Check

To check the battery, press the Battery Check pushbutton. If the battery check LED (Figure 29) does not come on, replace the battery. Even with the battery removed, the trip unit still operates, but the LED that indicates the cause of the trip does not come on.

When the battery is replaced (or if an APM is plugged into the trip unit), one or more of the LEDs may come on. Press the red Trip Reset pushbutton to turn the indicators OFF. The trip unit is then ready to provide cause of trip indication the next time the circuit breaker trips.

Battery Replacement

The battery can be replaced at any time, even while the circuit breaker is in service. Replacing the battery does not affect the operation of the circuit breaker or its protection functions.

1. Flip the cover open on the rating plug. See Figure 29.

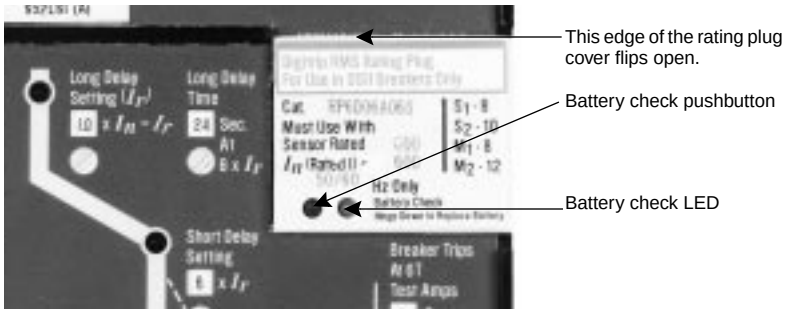

Figure 29: Typical Rating Plug

2. Pull the tab to pop out the battery. Refer to Figure 30.

Figure 30: Rating Plugs Shown with Covers Closed and Open

3. Insert the new battery with + and – polarities as shown in Figure 30. Lithium 3 V batteries are available where electronic and photographic equipment is sold. Manufacturers are listed in Table 11.

Table 11: Replacement Batteries

Manufacturer	Type
Varta Batteries, Inc.	CR 1/3N
Duracell	DL 1/3N
Sanyo Electric, Inc.	CR 1/3N

© 1996 Square D All Rights Reserved

CIRCUIT BREAKER APPLICATION

General

The circuit breaker is tripped on overload and short circuit conditions by the combined action of three components:

1. The sensors, which determine the current level.
2. The DIGITRIP RMS trip assembly, which contains the DIGITRIP RMS trip unit and provides a tripping signal when predetermined time-current levels are reached.
3. The actuator, which actually trips the circuit breaker.

Schematically, this is represented in Figure 31. This arrangement provides a very flexible system covering a wide range of tripping characteristics. Not only is the DIGITRIP RMS trip unit adjustable, but the variety of sensors and rating plugs provide a wide range of current ratings. See Figure 37 on page 56 in “APPENDIX C” for the schematic that specifically applies to the POWERLOGIC DIGITRIP RMS 810D trip unit and accompanying DS and DSII circuit breaker.

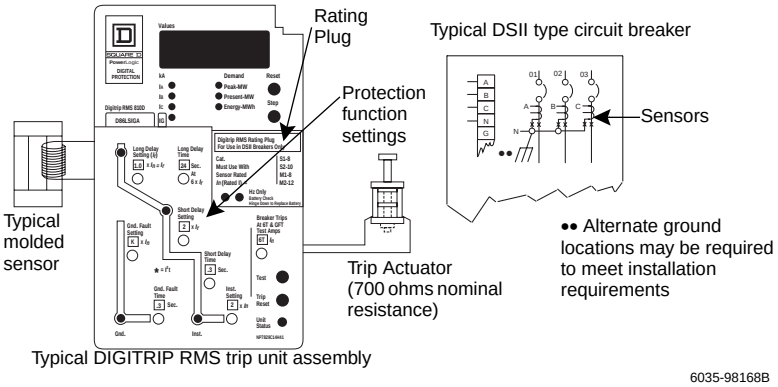

Figure 31: Typical Schematic Diagram of Basic Connections in Tripping System of the DSII Circuit Breaker

The automatic overload and short-circuit tripping characteristics for a specific circuit breaker are determined by the ratings of the installed current sensors, rating plugs, and the selected functional protection settings. Refer to the applicable circuit breaker instruction bulletin for specific setting procedures.

When the time-current conditions exceed the functional protection settings, the DIGITRIP RMS trip unit supplies a trip signal to the actuator. Thus, secondary control circuitry performs all tripping functions with no mechanical or direct magnetic action between the primary current and the mechanical tripping parts of the breaker. External control power is not required.

Trip Actuator

The trip actuator receives a tripping pulse from the DIGITRIP RMS trip assembly, and produces a mechanical force to trip the breaker. The actuator is made up of a permanent magnet, a disc held by the magnet, a rod acted on by a spring, a lever for tripping the breaker, and a lever for mechanically resetting the actuator. The magnet cannot pull and reset the disc against the force of the spring acting on the rod, but can overcome the spring force when the disc is in contact with the magnet pole piece.

A tripping pulse from the DIGITRIP RMS trip assembly counteracts the effect of the permanent magnet, allowing the spring to separate the disc from the magnet pole piece and move the rod to actuate the trip shaft lever. The trip shaft lever then rotates the trip shaft and trips the breaker.

© 1996 Square D All Rights Reserved

As the breaker opens, the left pole unit lever pin strikes the spring finger attached to the reset lever. This furnishes the assistance required to move the disc closing the air gap between it and the permanent magnet against the spring force.

The device is reset when the disc is in contact with the magnet. If the gap is not fully reset, the trip shaft lever holds the breaker mechanism in the trip-free condition and the breaker cannot be reclosed.

The trip actuator must be replaced, if it will not stay reset if the plunger is fully extended and will not stay reset.

Ground Fault Protection

When the DIGITRIP RMS trip assembly includes ground fault protection, the distribution system characteristics, that is, system grounding, number of sources, number and location of ground points, and so forth, must be considered as well as the manner and location in which the circuit breaker is connected to the system.

If the system neutral is grounded but the neutral is not carried with the phase conductors, the DIGITRIP RMS trip assembly includes all of the equipment necessary for ground fault protection. The basic mode of ground fault sensing employs a residual sensing scheme which vectorially sums the outputs of the individual phase current sensors. As long as the vectorial sum is zero, then no ground fault exists.

If the system neutral is grounded and a neutral conductor is carried with the phase conductors, it is necessary to use an additional sensor to cancel out any residual current in the phase conductors. This sensor must be mounted separately and must be located on the neutral conductor at the point where the neutral conductor connects to the neutral bus. These sensors are duplicates of those supplied on the breaker except for the 2400 A and 3200 A ratings where a modified neutral sensor is required.

Ground fault functional settings adjustments and illustrations of the effect of these settings is covered in “PROTECTION SETTINGS” on page 12. Applicable residual ground fault settings are given in Table 5 on page 17 and on the time-current curve.

Current Sensors

The three current sensors installed in the circuit breaker are located at the rear of the circuit breaker on the lower studs. They produce an output signal proportional to the load current and furnish the DIGITRIP RMS trip assembly with the intelligence and energy to trip the circuit breaker when the time-current conditions exceed the functional protection settings.

The continuous current rating for any frame size breaker can be changed by changing the rating plug. Table 4 on page 11 lists available current sensors and rating plugs. In general, plug ratings are available down through 50% of the current sensor rating.

⚠ WARNING

HAZARD OF OVERLOAD OF FAULT CONDITION

If replacing the trip actuator, observe the actuator coil polarity marking on the positive lead. Otherwise, the circuit breaker will not have overload or fault protection.

Failure to follow this instruction can result in death or serious injury.

© 1996 Square D All Rights Reserved

The selection of available current sensors and rating plugs coupled with the wide range of long-delay current pickup settings available on the DIGITRIP RMS trip unit makes one set of sensors suitable for a number of current ratings. The DIGITRIP RMS trip unit protection function settings are standard, and are usable with standard sensors of any rating, up to the frame rating of the circuit breaker. If sensors are changed, for example, because of changing load conditions, it is only necessary to replace the rating plug and readjust the DIGITRIP RMS trip unit protection function settings to the new desired values.

To discourage tampering with selected protection settings, a sealable plexiglass cover is provided. The cover is held in place by four cover screws. The non-tampering feature is insured by the insertion of a standard meter seal through the holes in two of the cover retention screws.

Potential Transformer

The Potential Transformer Module (PTM) is supplied with the POWERLOGIC DIGITRIP RMS 810D trip unit. It is mounted on the side of the trip assembly. The primary of the PTM is connected to the bottom end conductors of the circuit breaker. This module provides voltage for computing the energy monitoring parameters.

The PTM disconnect plug is mounted above the PTM as shown in Figure 21 on page 30. This plug must be disconnected prior to any dielectric testing of the circuit breaker.

© 1996 Square D All Rights Reserved

APPENDIX A

EXAMPLE OF ZONE SELECTIVE INTERLOCKING WITH DIGITRIP RMS TRIP UNITS

Assume a ground fault of 2000 amperes occurs (see Figure 32 on page 49).

Case 1

Without zone selective interlocking (standard time-delay coordination is used).

Fault 3: The branch circuit breaker trips, clearing the fault in 0.1 seconds.

Fault 2: The feeder circuit breaker trips, clearing the fault in 0.3 seconds.

Fault 1: The main circuit breaker trips, clearing the fault in 0.5 seconds.

Case 2

With zone selective interlocking.

Fault 3: The branch circuit breaker trip unit initiates the trip in 0.03 seconds (considered to be “Instantaneous,” that is, no intentional delay) to clear the fault. This branch feeder in zone 3 (Z3) sends an interlocking signal to the feeder in zone 2 (Z2). Feeder Z2 sends an interlocking signal to the main circuit breaker in zone 1 (Z1).

Main Z1 and feeder Z2 trip units begin to time out. If the branch circuit breaker Z3 does not clear the fault, the feeder circuit breaker feeder Z2 will clear the fault in 0.3 seconds (as above). Similarly, if feeder Z2 does not clear the fault, the main circuit breaker, Z1, clears the fault in 0.5 seconds (as above).

Fault 2: The feeder circuit breaker trip unit initiates the trip in 0.03 seconds to clear the fault. Feeder Z2 sends an interlocking signal to main Z1. Main Z1 trip unit begins to time out. If the feeder circuit breaker, Z2, does not clear the fault, the main circuit breaker, Z1, clears the fault in 0.5 seconds (as above).

Fault 1: There are no interlocking signals. The main circuit breaker trip unit initiates the trip in 0.03 seconds.

Figure 33 on page 50 is a zone selective interlocking connection diagram for a system with two main circuit breakers from incoming sources and a bus tie circuit breaker. Note that blocking diodes D1 and D2 are needed to prevent the bus tie breaker from sending itself an interlocking signal through the wiring loop.

© 1996 Square D All Rights Reserved

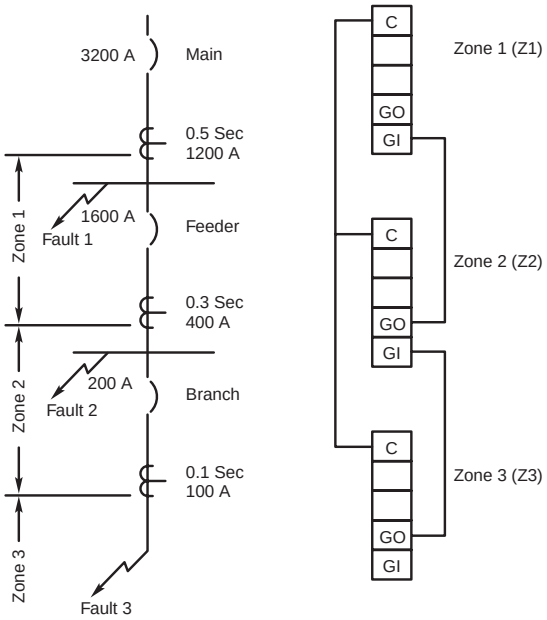

A1 Wiring is to be twisted pair, AWG No. 14 to AWG No. 20.
Route zone interlock wiring separate from power conductors.
Do not ground any zone interlock wiring.

A2 The maximum distance between first and last zone is 250 feet (76.3 m).

A3 A maximum of 20 circuit breakers may be connected in parallel in one zone.

Legend

C	=	Common (ungrounded)
SO	=	Short Delay Output Signal to Higher Level Zone
SI	=	Short Delay Input Signal from Lower Level Zone
GO	=	Ground Output Signal to Higher Level Zone
G1	=	Ground Input Signal from Lower Level Zone

= Fault at Location 2

Fault 2

6035-98169

Figure 32: Typical Zone Interlocking (Ground Fault Protection)

© 1996 Square D All Rights Reserved

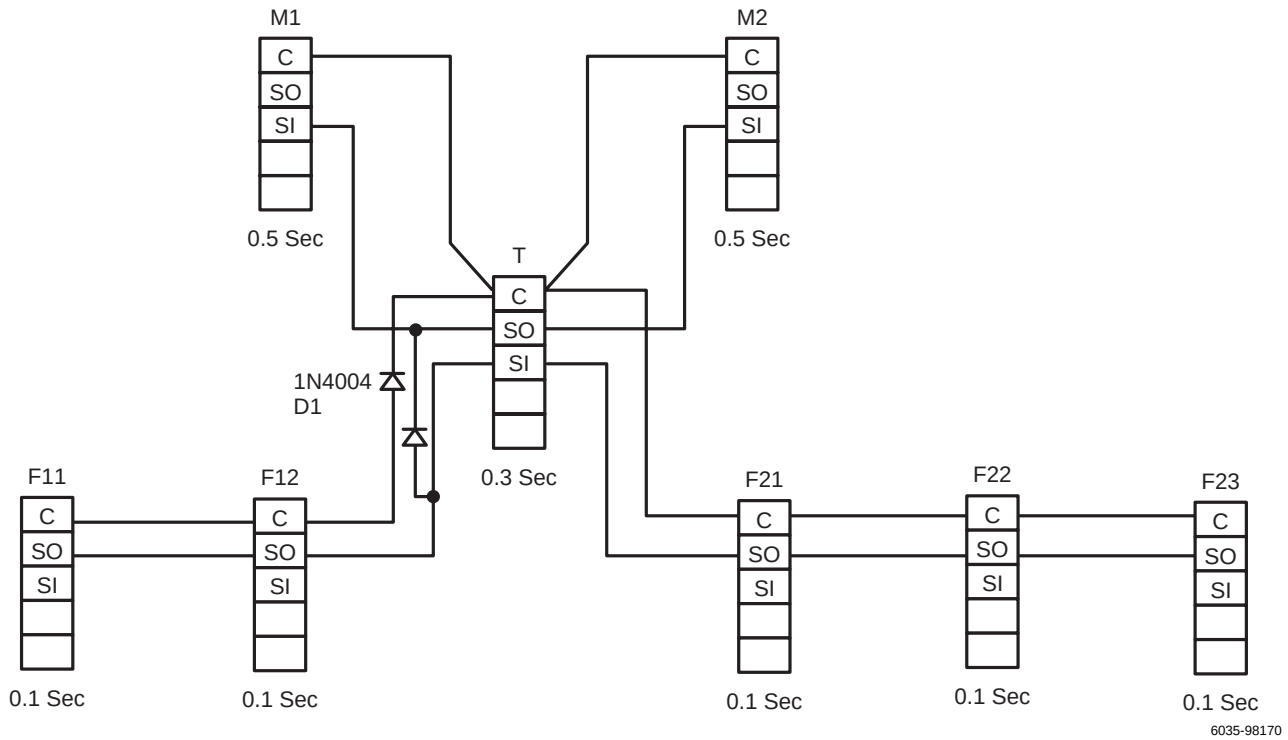

Figure 33: Typical Zone Interlocking Connections with Two Main Circuit Breakers (M1, M2) and a Tie Circuit Breaker (T) (Short Delay Protection)

© 1996 Square D All Rights Reserved

APPENDIX B

INTERPRETING DISPLAY CODES AFTER THE CIRCUIT BREAKER TRIPS (DIGITRIP RMS 610 AND POWERLOGIC DIGITRIP RMS 810D

Given a 1600 A frame circuit breaker with an I_n = 1000 A rating plug installed:

Case 1

Overload Trip Operation and High Load Condition

- Long Delay Current (Pickup) Setting = 1.0 x I_n = I_r = 1000 A
- Assume a prolonged 1500 A overload condition that results in an automatic circuit breaker trip operation. The following will occur:
  - — The Long Delay Trip LED comes on.
  - — The coded message LDT appears in the display window.
  - — The Long Delay Relay in the Power/Relay Module operates to close the remote Long Delay Trip Alarm Contact.

Operator Actions:

1. Observe the mode of trip LED and coded message in the display window.
2. Press the Step pushbutton. This clears the coded cause of trip message in the display window.
3. View values of phase currents in the display window, for example, 1.50 kA.

NOTE: The LED that is on identifies the phase current shown. Assume I_A. (It may not be the faulted phase.)

4. Press the Step pushbutton to view current values I_A, I_B, I_C, and I_G (or I_D instead of I_G). Each value of phase current kA appearing in the display window, is the value at the time of the trip operation.
5. Record all values of interest. Note which LEDs are on before resetting the trip unit.
6. Reset the trip unit by pressing the red Trip Reset pushbutton. This turns off all coded messages or current values or both in the display window and resets (opens) the remote alarm contacts in the Power/Relay Module.

NOTE: After LDT trip operations, correct any cause of overload trip before reclosing the circuit breaker. If not corrected and the circuit breaker is reclosed too quickly, then, because of the inherent Long Time Memory function, the Long Delay trip element operates faster than the related time-current curve indicates.

The amount of time required to clear the LTM memory circuit is a function of the Long Delay Time setting. The longer the delay setting, the longer the time required to reset the memory. Total memory clearing time could be up to 12 minutes.

The LTM memory function simulates the conventional thermal type (bi-metal) circuit breaker trip unit and serves a useful function by allowing the load conductors to cool down after an overload condition.

7. After correcting the cause of the overload trip (LDT), allow for the LTM memory circuit to reset and reclose the circuit breaker. This restores power to the load circuit.

NOTE: Before the overload trip operation, as the current approaches the overload level, the following trip unit indications are visible.

© 1996 Square D All Rights Reserved

- The HILD message begins to flash in the window when the overload condition exceeds 0.85 x I_r for 40 seconds or longer. To clear the HILD message and to view the present magnitudes of the currents, press the Step pushbutton on the display panel. Remember to press the Step pushbutton several times to display values of currents in all phases, and ground or neutral as applicable.
- The High-Load Relay in the Power/Relay Module activates when the overload condition exceeds 0.85 x I_r for 40 seconds or longer and closes the remote High Load Alarm Contact. Press the red Trip Reset pushbutton to reset the High Load Relay Contact, or reset the trip unit remotely by POWERLOGIC Communication.
- The Long Delay LED begins to flash on and off.
- The message LDPU begins to flash in the display window when the current value exceeds I_r.

Case 2

Instantaneous Trip Operation

Instantaneous Current (Pick-up) Setting = 8 x I_n = 8000 A.

Assume a 12 kA fault occurs.

After the trip operation, the following occurs:

- The Instantaneous Trip LED comes on.
- The coded message INST appears in the display window.
- The Short-Circuit Relay in the Power/Relay Module operates to close the Remote Short-Circuit Trip Alarm contact.

Operator Actions:

1. Observe the mode of trip LED and the INST message in the display window.
2. Press the Step pushbutton to view current values I_A, I_B, I_C, and I_G (or I_D instead of I_G) in the display window.

NOTE: The LED that is on identifies the phase current value displayed. However, the first value that appears may not be for the faulted phase.

Each value of phase current appearing in the display window, is the value at the time of the trip operation.

3. Record all values of interest. Note which LEDs are on before resetting the trip unit.
4. The value of one phase current in the display window is the 12.0 kA fault level.

NOTE: If the level of the fault current is more than 28 x I_n (or 28 kA in this example) the ORNG code is displayed rather than a numeric field. Fault levels above 28 x I_n exceed the maximum range of the current sensor and drive it into saturation.

5. Verify that all pertinent information is recorded and press the red Trip Reset pushbutton to reset the trip unit. All coded messages, values of current in the display window memory, and LEDs will turn off. The remote alarm contacts of the signal relay in the Power/Relay Module will reset (open).
6. After any corrective actions, inspections, or both, of the circuit breaker and related equipment, reclose the circuit breaker to restore power to the load circuit.

© 1996 Square D All Rights Reserved

APPENDIX C

Trip Curves

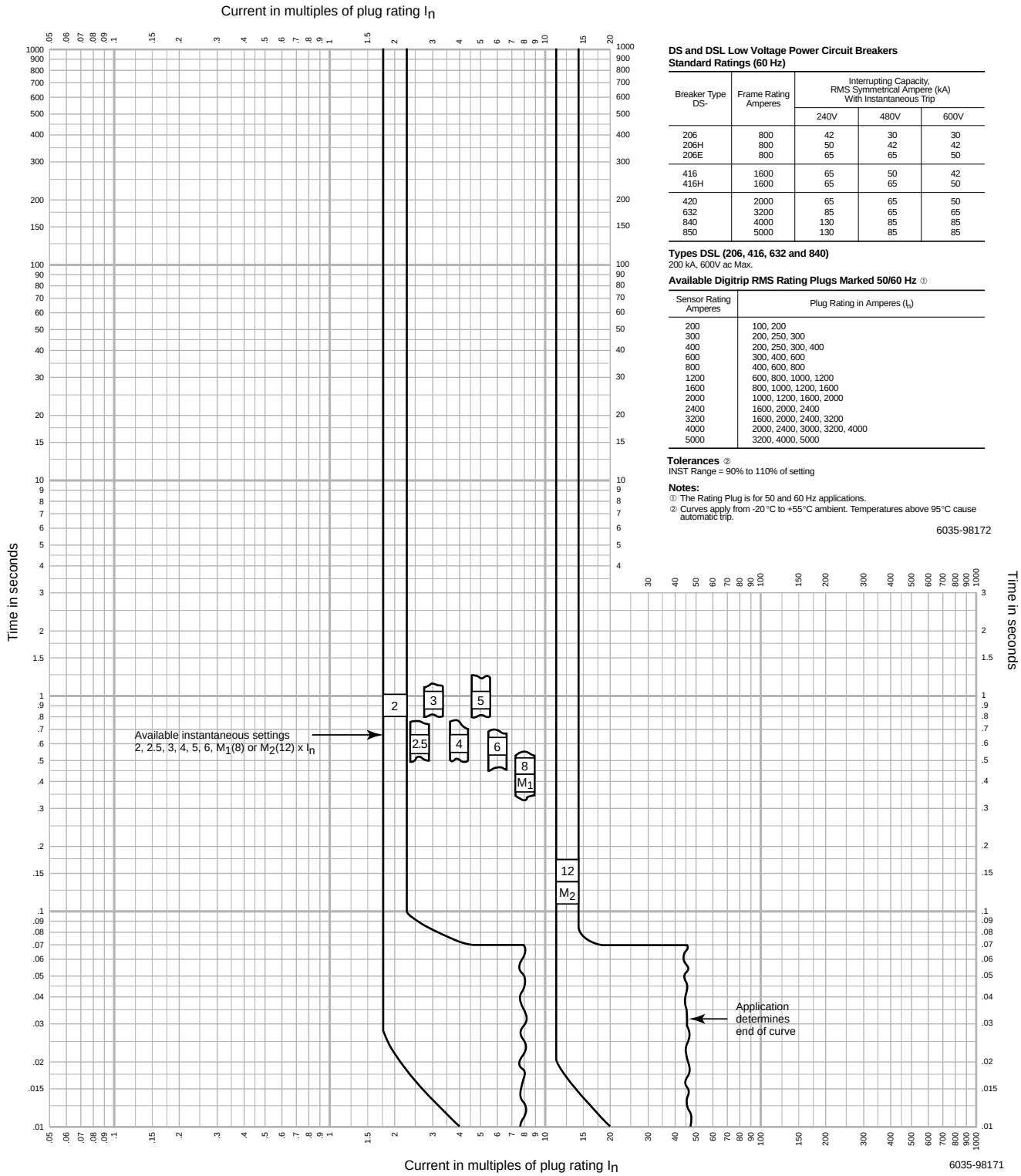

DS and DSL Low Voltage Power Circuit Breakers
Standard Ratings (60 Hz)

Breaker Type DS-	Frame Rating Amperes	Interrupting Capacity, RMS Symmetrical Ampere (kA) With Instantaneous Trip		
		240V	480V	600V
206	800	42	30	30
206H	800	50	42	42
206E	800	65	65	50
416	1600	65	50	42
416H	1600	65	65	50
420	2000	65	65	50
632	3200	85	65	65
840	4000	130	85	85
850	5000	130	85	85

Types DSL (206, 416, 632 and 840)
200 kA, 600V ac Max.

Available Digitrip RMS Rating Plugs Marked 50/60 Hz ①

Sensor Rating Amperes	Plug Rating in Amperes (I_n)
200	100, 200
300	200, 250, 300
400	200, 250, 300, 400
600	300, 400, 600
800	400, 600, 800
1200	600, 800, 1000, 1200
1600	800, 1000, 1200, 1600
2000	1000, 1200, 1600, 2000
2400	1600, 2000, 2400
3200	1600, 2000, 2400, 3200
4000	2000, 2400, 3000, 3200, 4000
5000	3200, 4000, 5000

Tolerances ②
INST Range = 90% to 110% of setting

Notes:
① The Rating Plug is for 50 and 60 Hz applications.
② Curves apply from -20 °C to +55 °C ambient. Temperatures above 95 °C cause automatic trip.

6035-98172

Figure 34: Types DS and DSL Circuit Breakers with DIGITRIP RMS Trip Units Typical Instantaneous Time-Phase Current Characteristic Curve (I)

© 1996 Square D All Rights Reserved

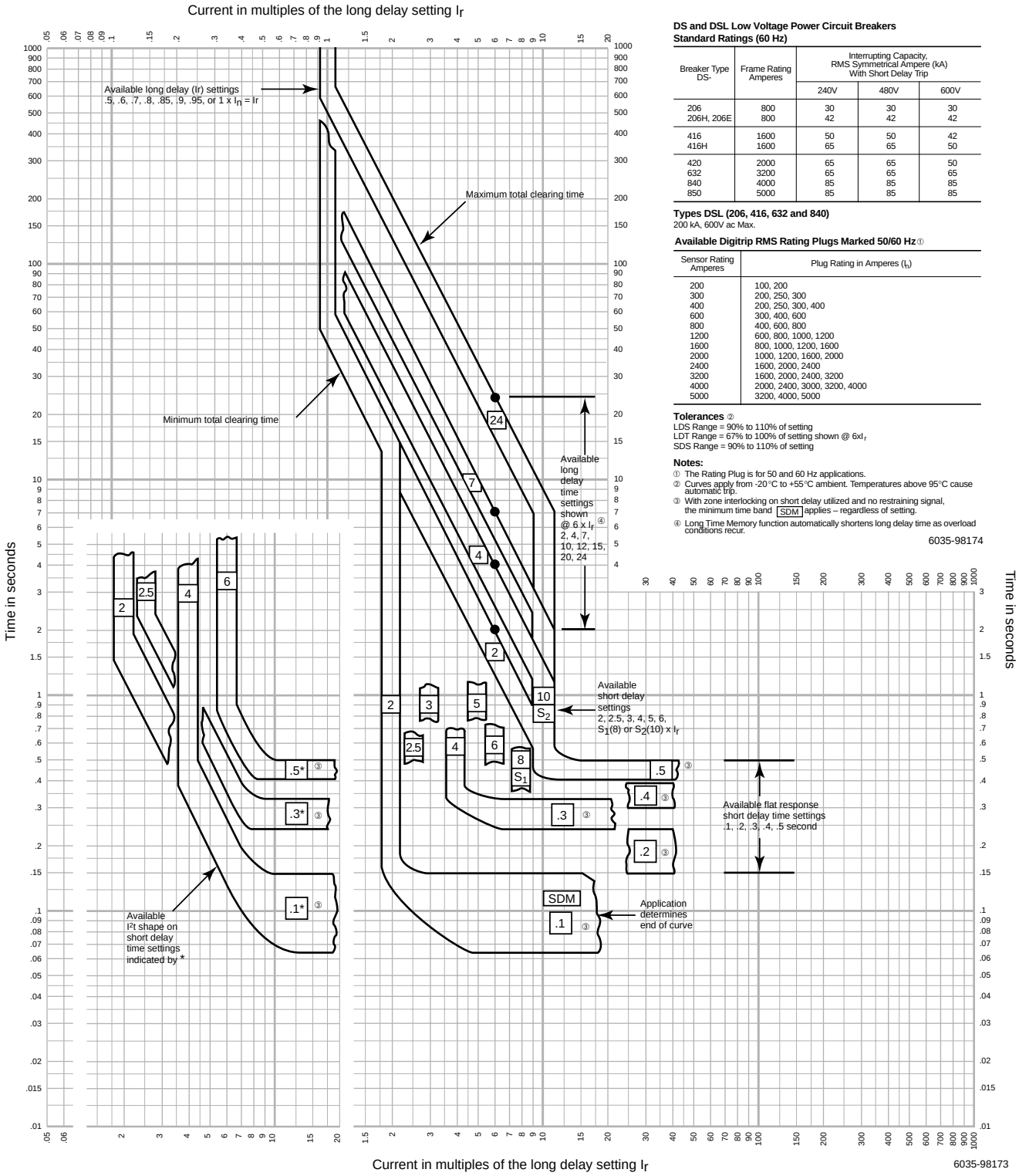

DS and DSL Low Voltage Power Circuit Breakers
Standard Ratings (60 Hz)

Breaker Type DS-	Frame Rating Amperes	Interrupting Capacity, RMS Symmetrical Ampere (kA) With Short Delay Trip		
		240V	480V	600V
206	800	30	30	30
206H, 206E	800	42	42	42
416	1600	50	50	42
416H	1600	65	65	50
420	2000	65	65	50
632	3200	65	65	65
840	4000	85	85	85
850	5000	85	85	85

Types DSL (206, 416, 632 and 840)
200 kA, 600V ac Max.

Available Digitrip RMS Rating Plugs Marked 50/60 Hz ①

Sensor Rating Amperes	Plug Rating in Amperes (I_n)
200	100, 200
300	200, 250, 300
400	200, 250, 300, 400
600	300, 400, 600
800	400, 600, 800
1200	600, 800, 1000, 1200
1600	800, 1000, 1200, 1600
2000	1000, 1200, 1600, 2000
2400	1600, 2000, 2400
3200	1600, 2000, 2400, 3200
4000	2000, 2400, 3000, 3200, 4000
5000	3200, 4000, 5000

Tolerances ②
LDS Range = 90% to 110% of setting
LDT Range = 67% to 100% of setting shown @ 6xI_r
SDS Range = 90% to 110% of setting

Notes:
① The Rating Plug is for 50 and 60 Hz applications.
② Curves apply from -20°C to +55°C ambient. Temperatures above 95°C cause automatic trip.
③ With zone interlocking on short delay utilized and no restraining signal, the minimum time band SDM applies – regardless of setting.
④ Long Time Memory function automatically shortens long delay time as overload conditions recur.

6035-98174

Figure 35: Types DS and DSL Circuit Breakers with DIGITRIP RMS Trip Units Typical Long Delay and Short Delay Time-Phase Current Characteristic Curve (LS)

© 1996 Square D All Rights Reserved

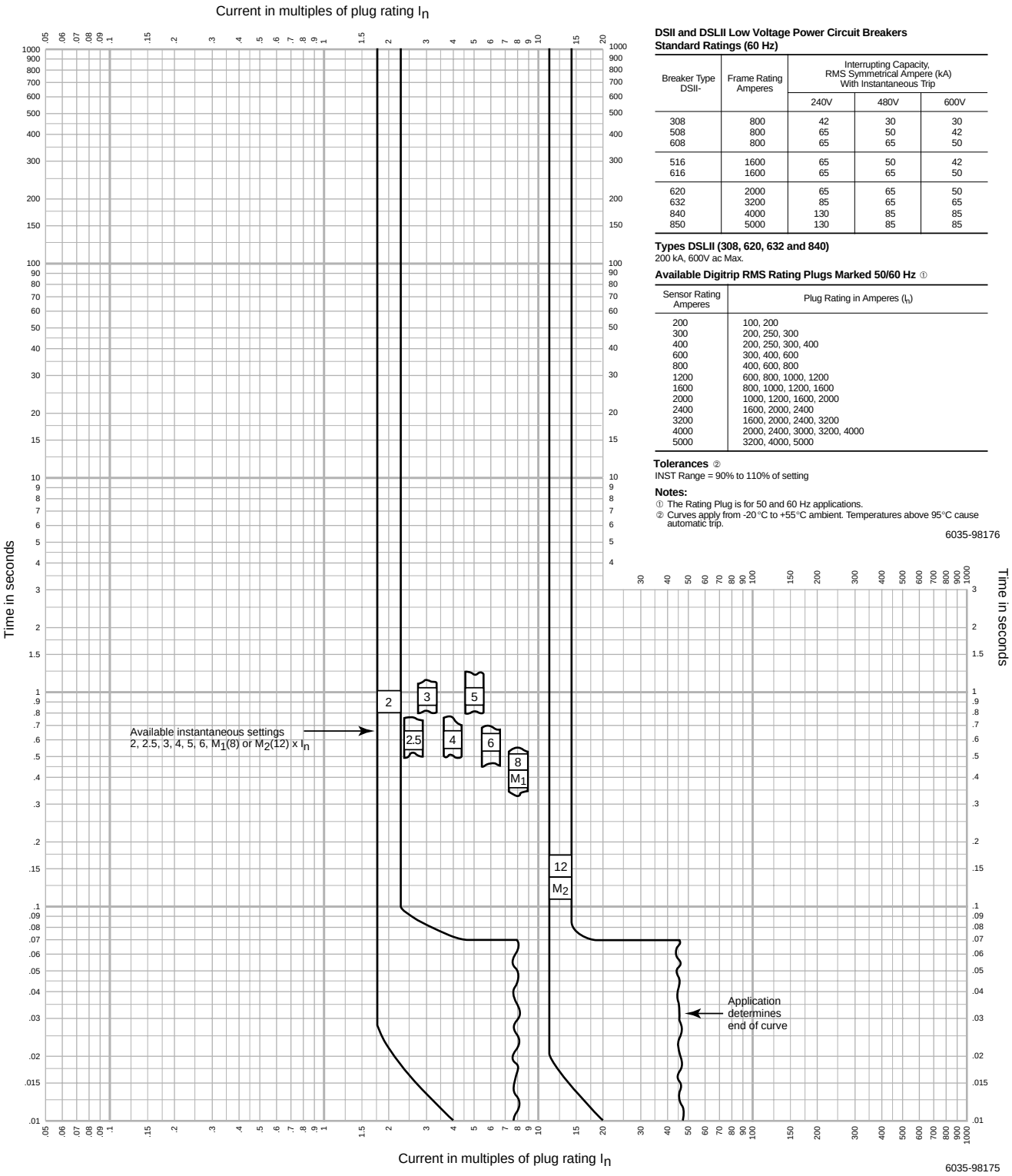

DSII and DSLII Low Voltage Power Circuit Breakers
Standard Ratings (60 Hz)

Breaker Type DSII-	Frame Rating Amperes	Interrupting Capacity, RMS Symmetrical Ampere (kA) With Instantaneous Trip		
		240V	480V	600V
308	800	42	30	30
508	800	65	50	42
608	800	65	65	50
516	1600	65	50	42
616	1600	65	65	50
620	2000	65	65	50
632	3200	85	65	65
840	4000	130	85	85
850	5000	130	85	85

Types DSLII (308, 620, 632 and 840)
200 kA, 600V ac Max.

Available Digitrip RMS Rating Plugs Marked 50/60 Hz ①

Sensor Rating Amperes	Plug Rating in Amperes (I_n)
200	100, 200
300	200, 250, 300
400	200, 250, 300, 400
600	300, 400, 600
800	400, 600, 800
1200	600, 800, 1000, 1200
1600	800, 1000, 1200, 1600
2000	1000, 1200, 1600, 2000
2400	1600, 2000, 2400
3200	1600, 2000, 2400, 3200
4000	2000, 2400, 3000, 3200, 4000
5000	3200, 4000, 5000

Tolerances ②
INST Range = 90% to 110% of setting

Notes:
① The Rating Plug is for 50 and 60 Hz applications.
② Curves apply from -20°C to +55°C ambient. Temperatures above 95°C cause automatic trip.

6035-98176

Figure 36: Types DSII and DSLII Circuit Breakers with DIGITRIP RMS Trip Units Typical Instantaneous Time-Phase Current Characteristic Curve (I)

© 1996 Square D All Rights Reserved

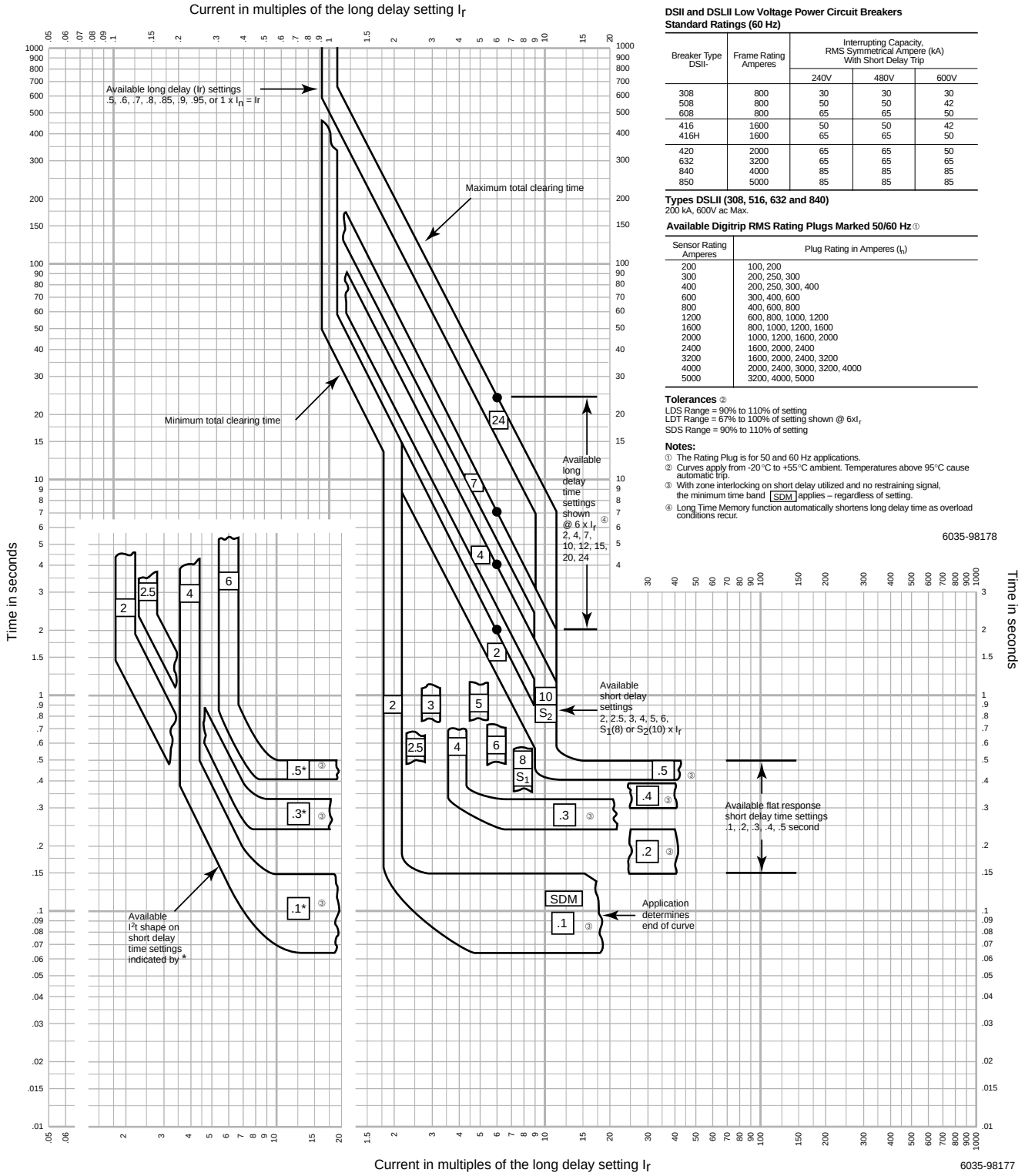

DSII and DSLII Low Voltage Power Circuit Breakers Standard Ratings (60 Hz)

Breaker Type DSII-	Frame Rating Amperes	Interrupting Capacity, RMS Symmetrical Ampere (kA) With Short Delay Trip		
		240V	480V	600V
308	800	30	30	30
508	800	50	50	42
608	800	65	65	50
416	1600	50	50	42
416H	1600	65	65	50
420	2000	65	65	50
632	3200	65	65	65
840	4000	85	85	85
850	5000	85	85	85

Types DSLII (308, 516, 632 and 840)
200 kA, 600V ac Max.

Available Digitrip RMS Rating Plugs Marked 50/60 Hz ①

Sensor Rating Amperes	Plug Rating in Amperes (I_n)
200	100, 200
300	200, 250, 300
400	200, 250, 300, 400
600	300, 400, 600
800	400, 600, 800
1200	600, 800, 1000, 1200
1600	800, 1000, 1200, 1600
2000	1000, 1200, 1600, 2000
2400	1600, 2000, 2400
3200	1600, 2000, 2400, 3200
4000	2000, 2400, 3000, 3200, 4000
5000	3200, 4000, 5000

Tolerances ②
LDS Range = 90% to 110% of setting
LDT Range = 67% to 100% of setting shown @ 6xI_r
SDS Range = 90% to 110% of setting

Notes:
① The Rating Plug is for 50 and 60 Hz applications.
② Curves apply from -20°C to +55°C ambient. Temperatures above 95°C cause automatic trip.
③ With zone interlocking on short delay utilized and no restraining signal, the minimum time band SDM applies – regardless of setting.
④ Long Time Memory function automatically shortens long delay time as overload conditions recur.

Figure 37: Types DSII and DSLII Circuit Breakers with DIGITRIP RMS Trip Units Typical Long Delay Time-Phase Current Characteristic Curve (LS)

© 1996 Square D All Rights Reserved

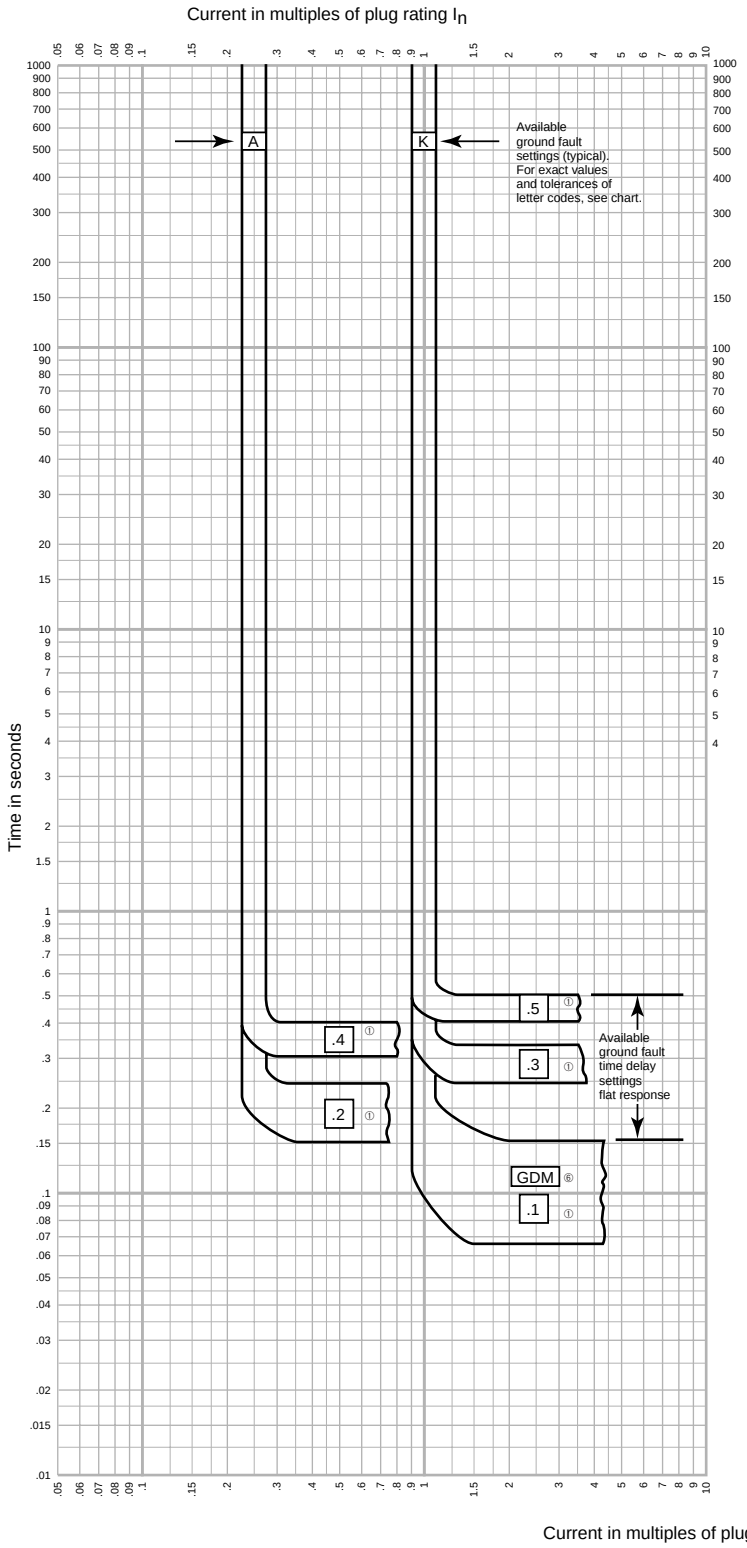

Ground Fault Settings (Amperes) ① ③ ④

I_n plug ratings available	Code	A②	B②	C②	D②	E	F	H	K
	100	25	30	35	40	50	60	75	100
	200	50	60	70	80	100	120	150	200
	250	63	75	88	100	125	150	188	250
	300	75	90	105	120	150	180	225	300
	400	100	120	140	160	200	240	300	400
	600	150	180	210	240	300	360	450	600
	800	200	240	280	320	400	480	600	800
	1000	250	300	350	400	500	600	750	1000
	1200	300	360	420	480	600	720	900	1200
	1600	400	480	560	640	800	960	1200	1200
	2000	500	600	700	800	1000	1200	1200	1200
	2400	600	720	840	960	1200	1200	1200	1200
	3200	800	960	1120	1200	1200	1200	1200	1200
	4000	1000	1200	1200	1200	1200	1200	1200	1200
	5000	1200	1200	1200	1200	1200	1200	1200	1200

Notes:

① Except as noted tolerances on current levels are ±10% of values shown in chart.

② For Testing Purposes Only: When using an external single phase current source to check low level ground fault current settings, it is advisable to use the Auxiliary Power Module (APM). See TEST PROCEDURES in Instruction Leaflet.

③ The Rating Plug is for 50 and 60 Hz applications.

④ All tabulated values are based on the use of a residual sensing scheme with the same rated current sensor in all phase and neutral conductors.

⑤ Curves apply from -20°C to +55°C ambient. Temperatures above 95°C cause automatic trip.

⑥ With zone interlocking on ground fault utilized and no restraining signal, the minimum time band GDM applies – regardless of setting.

6035-98180

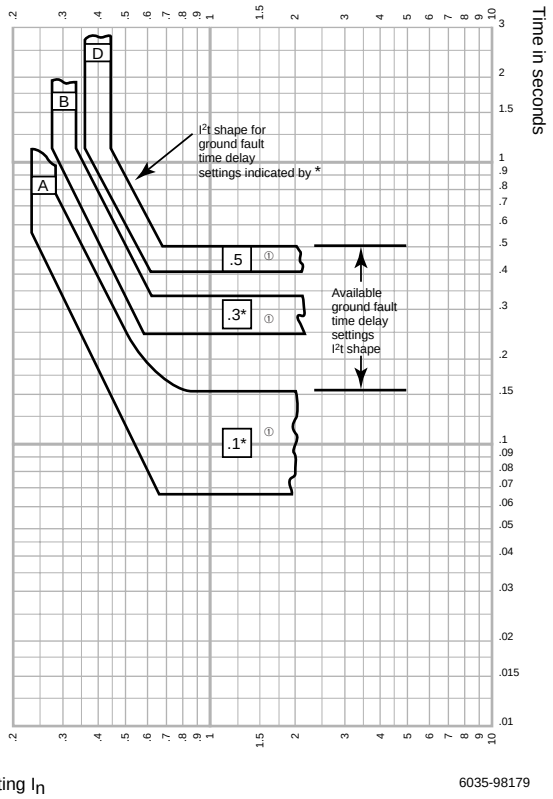

6035-98179

Figure 38: Types DS/DSL and DSII/DSLII Circuit Breakers with DIGITRIP RMS Trip Units Typical Time-Ground Current Characteristic Curve (G)

NOTE: Trip curves are included in this section for reference only. For the complete set, Type DS/DSL and DSII and DSLII Circuit Breaker ***Characteristic Tripping Curves****, request CD-ROM 0110TC9601R11/98.*

© 1996 Square D All Rights Reserved

APPENDIX D

POWERLOGIC DIGITRIP RMS 810D Trip Unit and DS Circuit Breaker Schematic

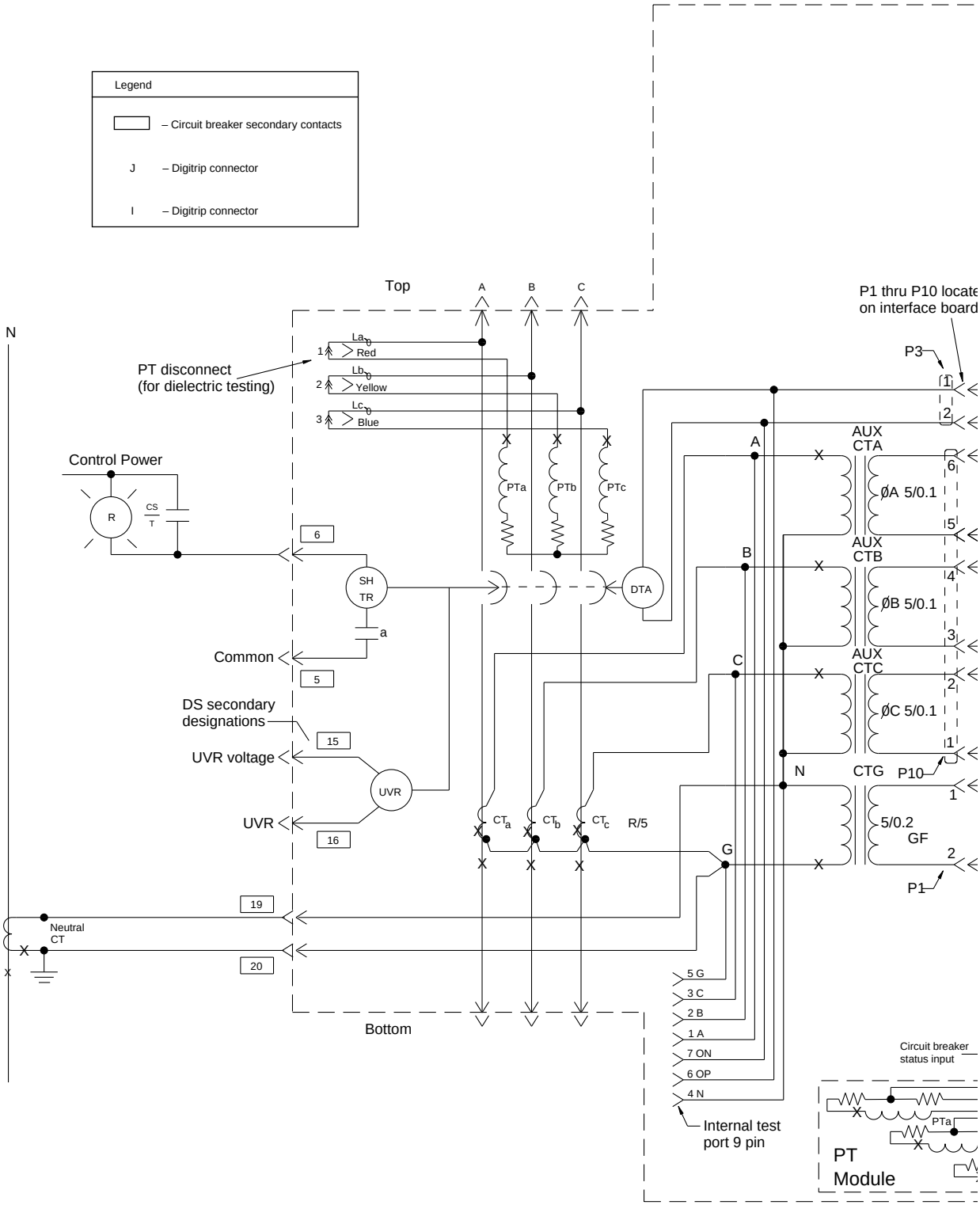

Figure 39: POWERLOGIC DIGITRIP RMS 810D Trip Unit and DS Circuit Breaker Schematic

© 1996 Square D All Rights Reserved

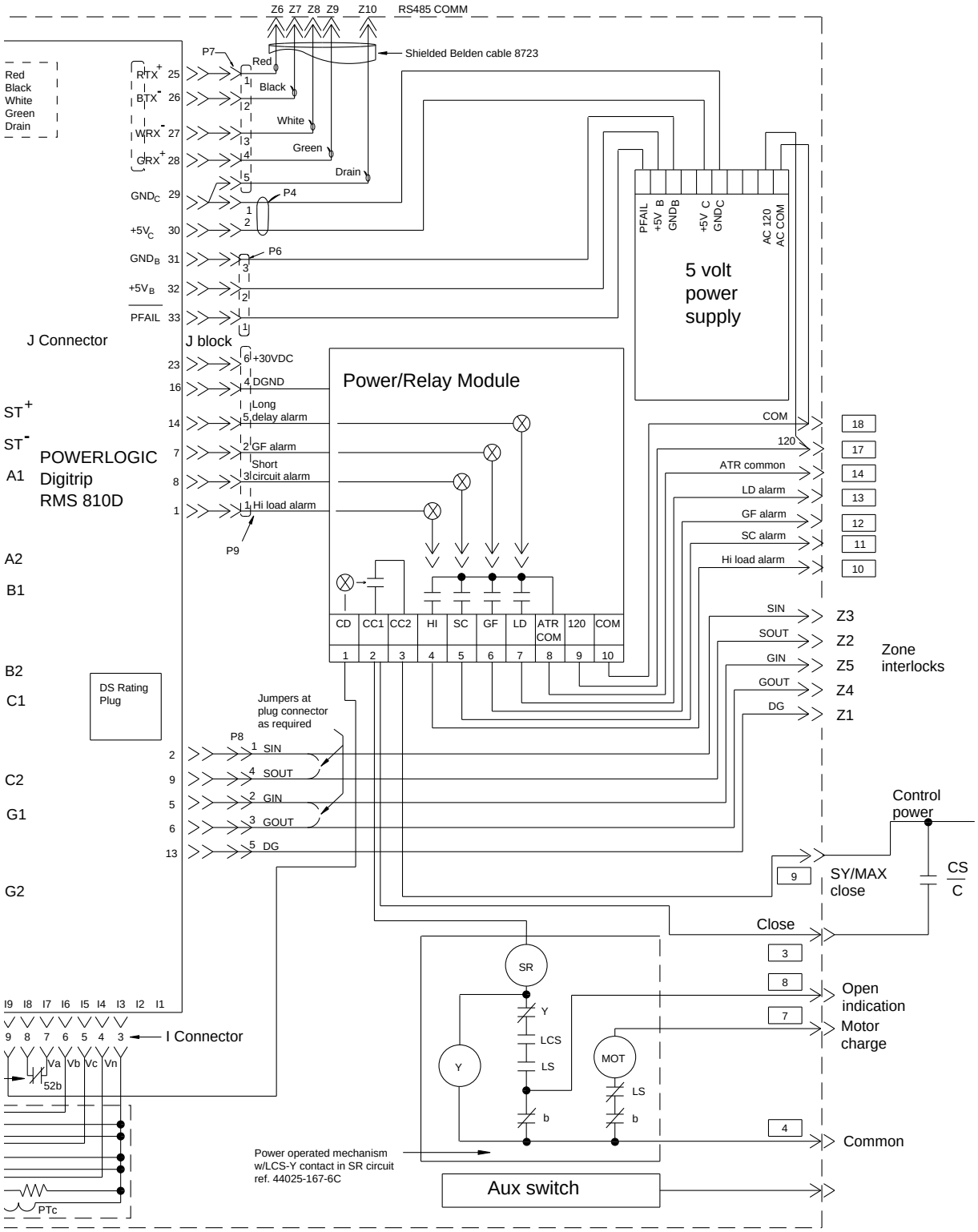
Z6 Z7 Z8 Z9 Z10 RS485 COMM
Shielded Belden cable 8723
P7
Red
Black
White
Green
Drain
Red
Black
White
Green
Drain
RTX+ 25
BTX- 26
WRX- 27
GRX+ 28
GNDC 29
+5VC 30
GNDB 31
+5VB 32
PFAIL 33
P4
P6
PFAIL
+5V B
GNDB
+5V C
GNDC
AC 120
AC COM
5 volt power supply
J Connector
J block
23 6 +30VDC
16 4 DGND
14 5 Long delay alarm
7 2 GF alarm
8 3 Short circuit alarm
1 1 Hi load alarm
P9
Power/Relay Module
ST+
ST-
POWERLOGIC
Digitrip
RMS 810D
A1
A2
B1
B2
C1
C2
G1
G2
CD CC1 CC2 HI SC GF LD ATR COM 120 COM
1 2 3 4 5 6 7 8 9 10
COM 18
120 17
ATR common 14
LD alarm 13
GF alarm 12
SC alarm 11
Hi load alarm 10
SIN Z3
SOUT Z2
GIN Z5
GOUT Z4
DG Z1
Zone interlocks
DS Rating Plug
Jumpers at plug connector as required
P8
2 1 SIN
9 4 SOUT
5 2 GIN
6 3 GOUT
13 5 DG
Control power
9 SY/MAX close
CS
C
Close
3
SR
8 Open indication
7 Motor charge
Y
LCS
LS
b
MOT
LS
b
4 Common
Y
I9 I8 I7 I6 I5 I4 I3 I2 I1
9 8 7 6 5 4 3
I Connector
Va Vb Vc Vn
52b
PTc
Power operated mechanism w/LCS-Y contact in SR circuit ref. 44025-167-6C
Aux switch

APPENDIX E

POWERLOGIC DIGITRIP RMS 810D Trip Unit and DSII Circuit Breaker Schematic

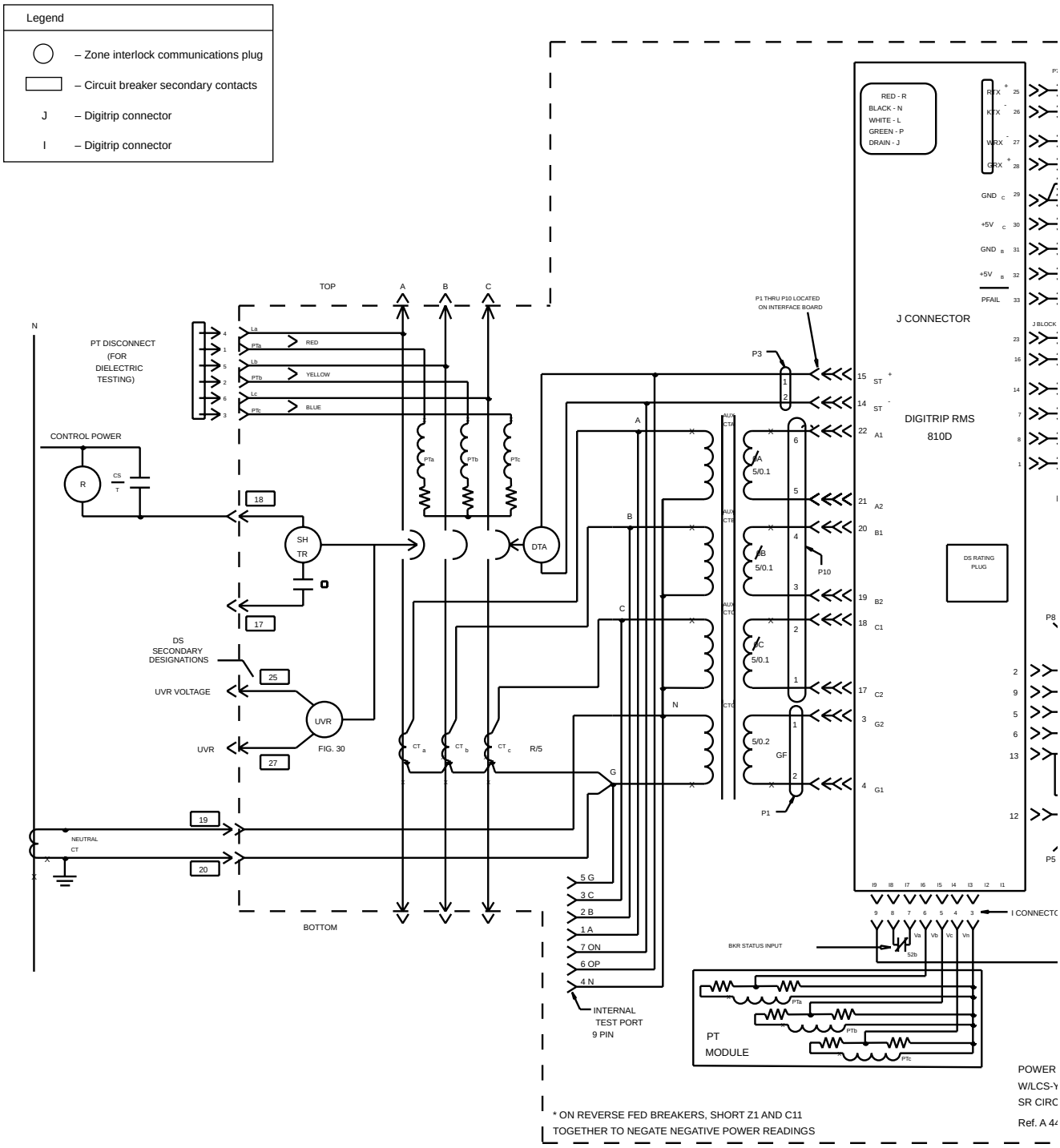

Figure 40: POWERLOGIC DIGITRIP RMS 810D Trip Unit and DSII Circuit Breaker Schematic

© 1996 Square D All Rights Reserved

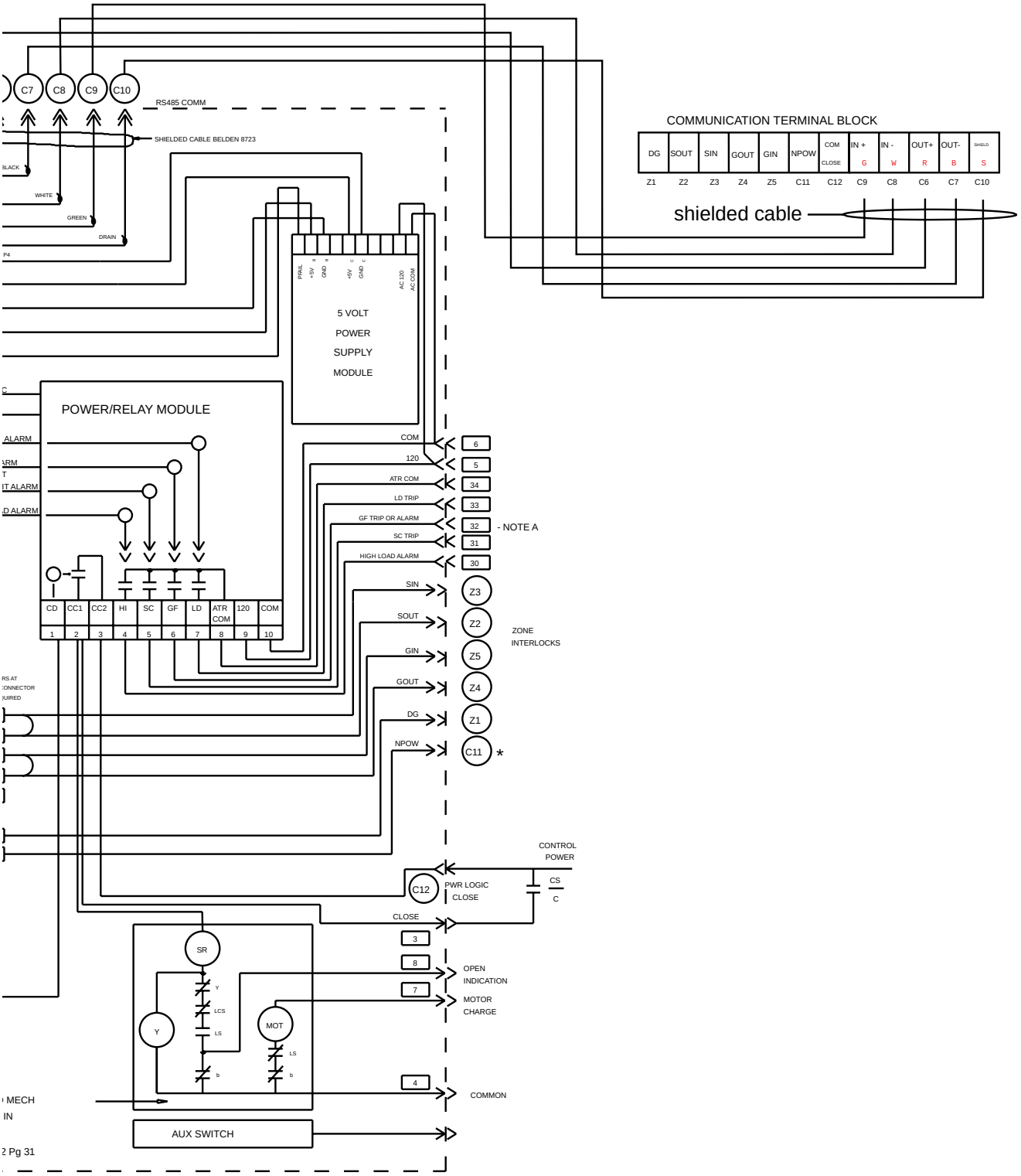
C7
C8
C9
C10
RS485 COMM
SHIELDED CABLE BELDEN 8723
BLACK
WHITE
GREEN
DRAIN
COMMUNICATION TERMINAL BLOCK
DG
SOUT
SIN
GOUT
GIN
NPOW
COM
CLOSE
IN +
G
IN -
W
OUT+
R
OUT-
B
SHIELD
S
Z1
Z2
Z3
Z4
Z5
C11
C12
C9
C8
C6
C7
C10
shielded cable
5 VOLT
POWER
SUPPLY
MODULE
POWER/RELAY MODULE
ALARM
CD
CC1
CC2
HI
SC
GF
LD
ATR COM
120
COM
1
2
3
4
5
6
7
8
9
10
COM
120
ATR COM
LD TRIP
GF TRIP OR ALARM
SC TRIP
HIGH LOAD ALARM
6
5
34
33
32
31
30
- NOTE A
SIN
SOUT
GIN
GOUT
DG
NPOW
Z3
Z2
Z5
Z4
Z1
C11
*
ZONE
INTERLOCKS
CONTROL
POWER
C12
PWR LOGIC
CLOSE
CS
C
CLOSE
3
8
7
4
OPEN
INDICATION
MOTOR
CHARGE
COMMON
SR
Y
LCS
LS
b
MOT
LS
b
Y
MECH
IN
AUX SWITCH
2 Pg 31

© 1996 Square D All Rights Reserved

Square D Company
1500 South University Blvd.
Middletown, OH, 45044 USA
(513) 424-1601
www.squared.com

Trademark Acknowledgements

DIGITRIP is a reistered trademark of Cutler-Hammer.

Square D, POWERLOGIC, SY/LINK, SY/MAX, SY/NET and are registered trademarks of Square D Company. System Manager is a trademark of Square D Company. All other trademarks are the intellectual property of their respective companies.

Electrical equipment should be serviced only by qualified electrical maintenance personnel. No responsibility is assumed by Square D for any consequences arising out of the use of this material.

Bulletin No. 6035-510A November 1998 © 1996 Square D All Rights Reserved.
Replaces 6035-510 dated 11/96.