August, 1985

Manual 6020-1
Supersedes Manual SU-4100 Dated 4/80

Instruction Manual

Unit Substations and Low Voltage Metal-Enclosed Drawout Switchgear

- Lifting and Handling
- Initial Inspection
- Storage
- Installation

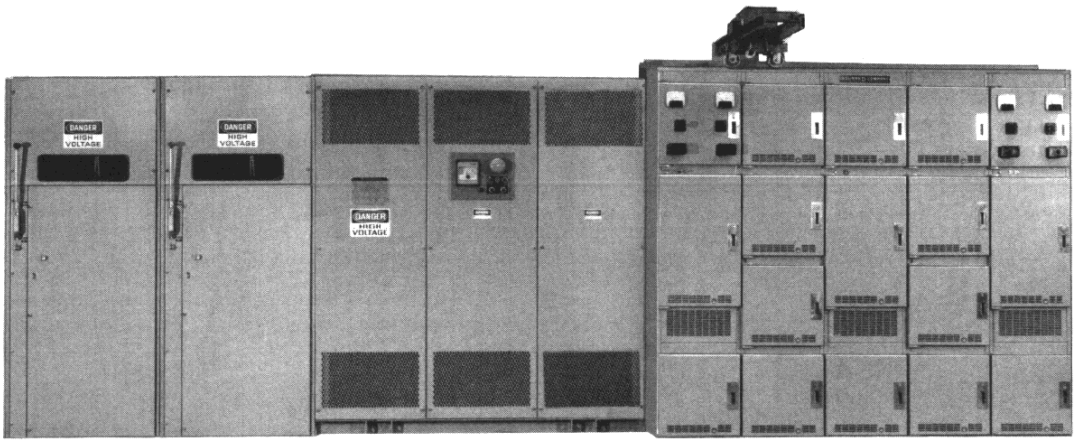

SQUARE D COMPANY

LIFTING AND HANDLING

Larger equipment will be shipped in separate shipping sections to facilitate handling. The equipment may be moved by one of the following two methods:

1. Jacking angles and pipe rollers: Each completed equipment is supplied with at least four jacking angles (Unit Substations) or a wooden skid (Switchgear) at the lower base assembly. The unit may be jacked up and pipe rollers placed beneath, to facilitate rolling the equipment across the floor. The jacking angles may be removed after equipment is in position and used for anchoring purposes.

2. Cable sling: The equipment may be lifted by crane with a sling around the entire structure. A spreader beam (not furnished) should be used across the top to prevent the cables from applying pressure to the top sides of the equipment.

Do Not Lift Equipment Directly from the Top of the Unit

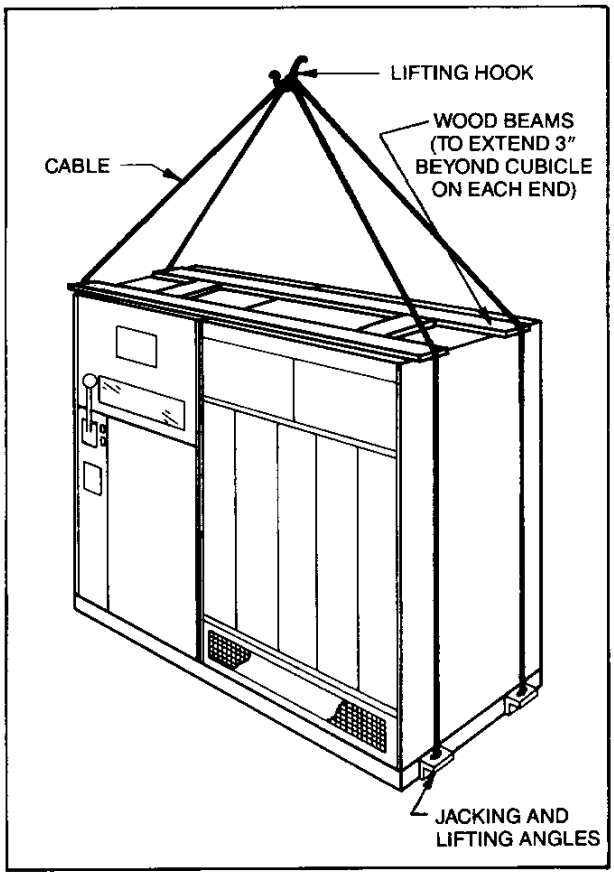

RECOMMENDED METHOD OF LIFTING POWER ZONE® SUBSTATION

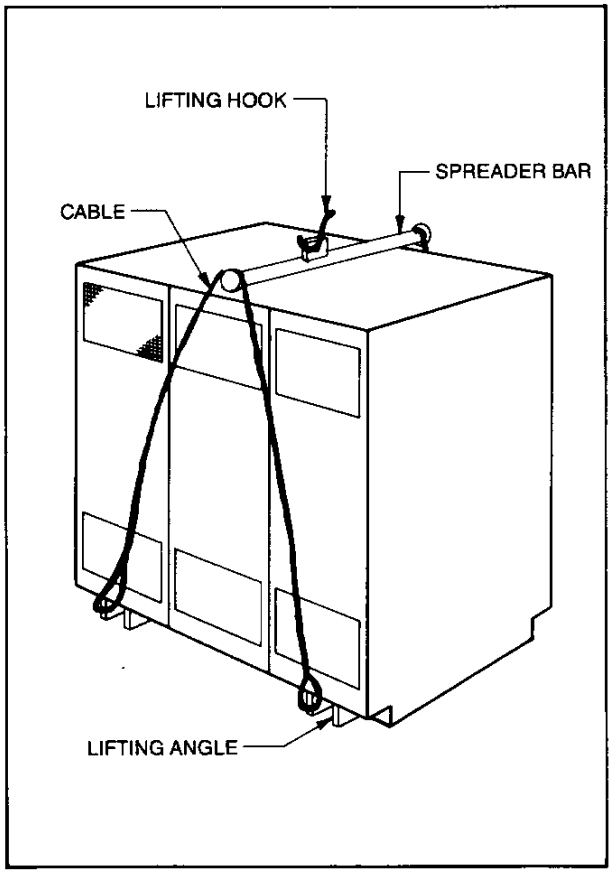

RECOMMENDED METHOD OF LIFTING TRANSFORMER SECTION

Power-Zone is a Registered Trademark of Square D Co.

©Square D Company, 1985

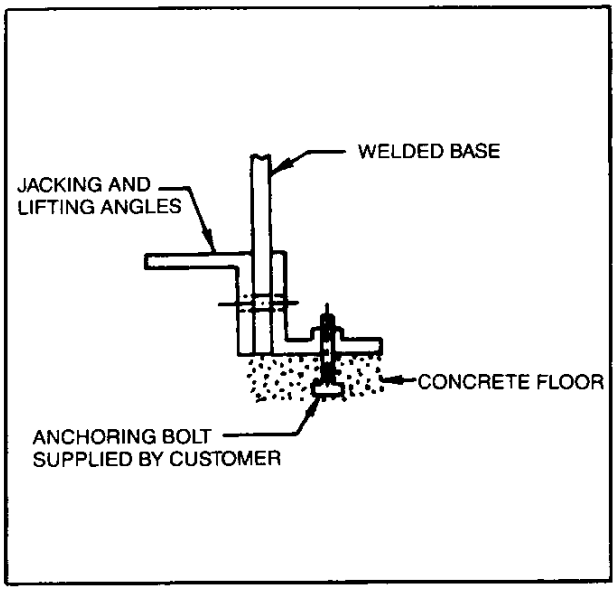

DETAIL SHOWING ANCHORING OF UNITS

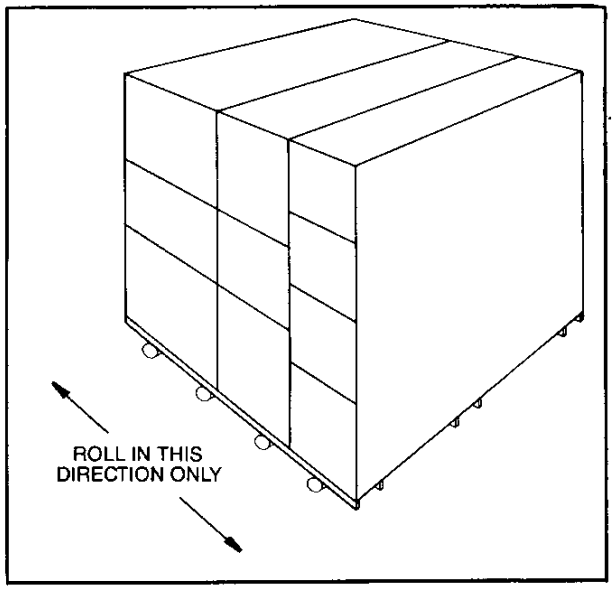

MOVEMENT OF SWITCHGEAR

INITIAL INSPECTION

All equipment prior to leaving the factory, is carefully inspected and packed by workmen experienced in the proper handling and packing of electrical equipment. Upon receipt of the equipment careful inspection should be made to determine any damage that might have occurred during transit. If damage is evident, or there is any visible indication of rough handling, claim for damage should be filed at once with the transportation company and the local Square D Company field office should be notified. The Square D Company is not responsible for damage that occurs in the hands of the carrier. Upon request, the Company will assist in securing an adjustment. All information concerning the shipment, such as order number, case numbers, and damaged parts, should accompany all claims.

STORAGE

If it is necessary to store equipment, for any period of time, the following precautions should be taken to provide the best care for the equipment until such time as it may be installed and put into service:

1. Uncrate the equipment, but leave on skids for subsequent moving.
2. Check for missing or damaged parts.
3. Store the entire structure in a clean, dry location.
4. Cover the unit to prevent deposits of dirt or other foreign material on movable parts and electrical contact surfaces. The cover should be sufficiently ventilated.
5. When necessary, provide heat to keep equipment dry. Furnish approximately 100 watts for each compartment of each frame. On outdoor switchgear, a temporary power connection to the strip heaters installed in the unit will accomplish this purpose.

INSTALLATION

For mounting switchgear equipment, it is essential that the general arrangement drawings be studied carefully, so the various parts are assembled in the correct order. In most cases, the heaviest single piece of equipment should be located first on the foundation. If the switchgear is to be connected to bus duct runs which are already installed, it is essential to mount those sections connecting to the bus duct connections before installing the balance of the equipment. The various shipping sections should be mounted in the same plane and be level to insure proper connection between sections. The weight of the equipment is generally sufficient to eliminate the necessity for anchoring the completed equipment to the foundation. However, each equipment is provided with necessary channels, etc., for anchoring it to the floor. These locations are shown on the equipment drawings. Remove all shipping supports and packaging materials.

SQUARE D COMPANY

Manual 6020-1

4M 4/86 H.P.I

Printed in U.S.A.