IB-5721

REVISION C

LOW VOLTAGE POWER SWITCHGEAR

INSTRUCTIONS

TYPE K-225, K-600 AND K-1600 CIRCUIT BREAKERS

DRAWOUT MOUNTED

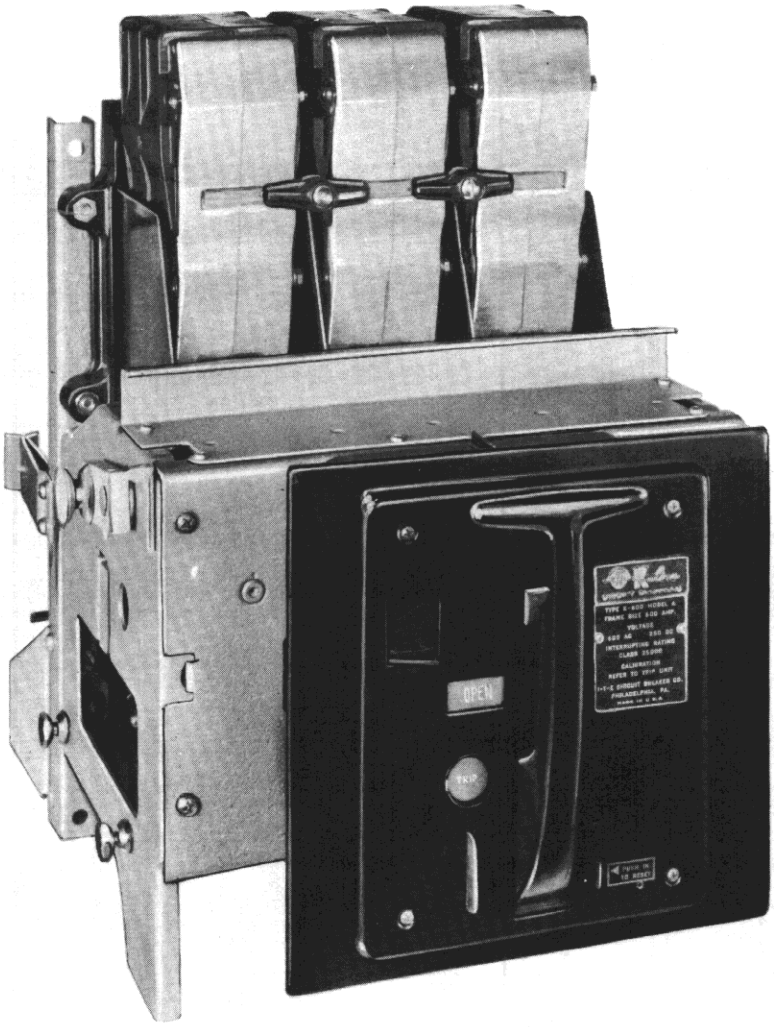

I-T-E CIRCUIT BREAKER COMPANY • PHILADELPHIA 30, PENNSYLVANIA

PRINTED IN U.S.A. 6-61

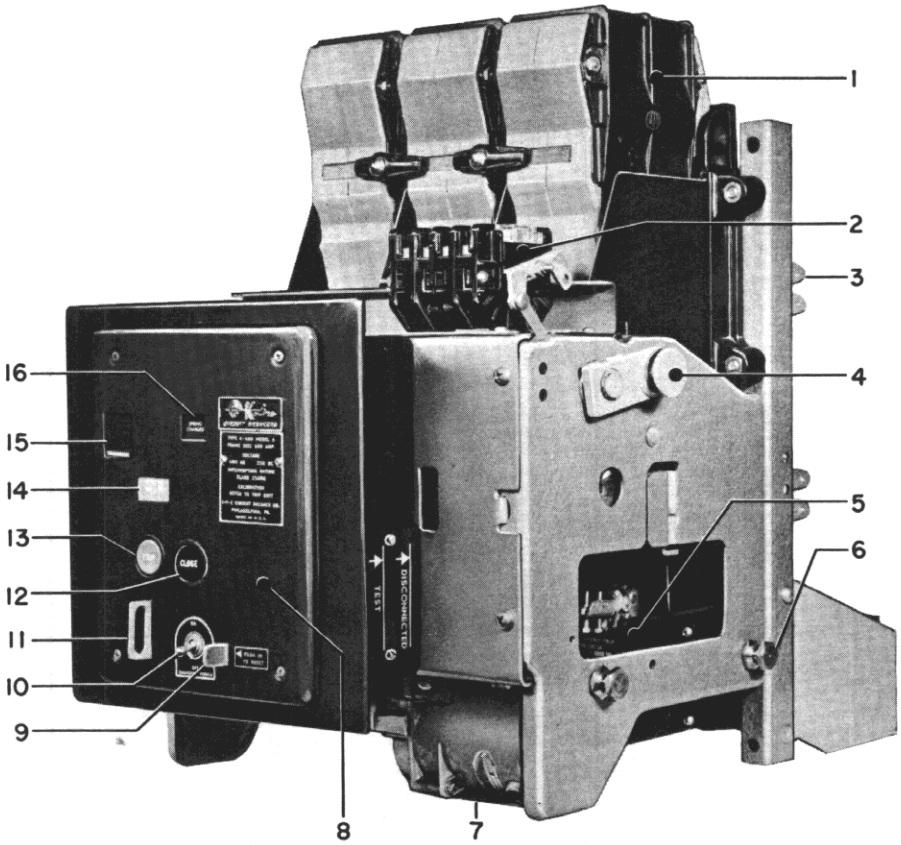

1 Arc Chute
2 Auxiliary Switch
3 Primary Separable Contact
4 Racking Cam Assembly
5 Overcurrent Trip Device
6 Positioning Pin
7 Motor
8 Escutcheon Assembly
9 Automatic Trip Indicator
10 Charging Power Switch
11 Locking Hasp
12 Electric Close Button
13 Manual Trip Button
14 Visual Indicator
15 Racking Shutter
16 Spring Charge Indicator

Fig. 1—Type K-600 Electrically Operated Circuit Breaker

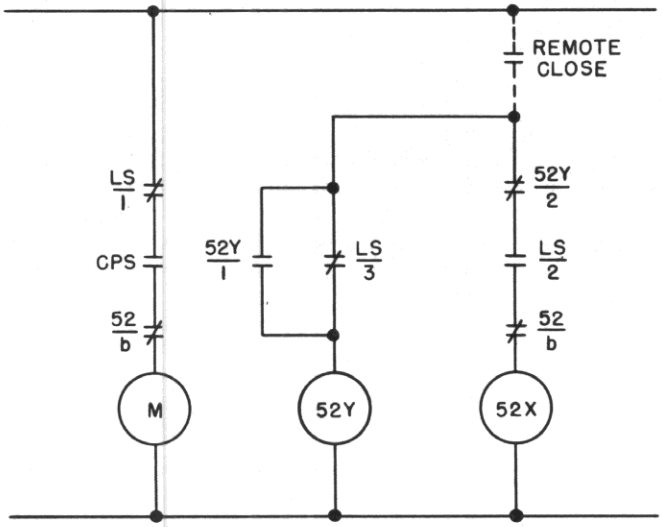

LEGEND

M—Charging Motor
CPS—Charging Power Switch
LS/1, LS/3—Limit Switch Contacts Closed When Springs are Discharged, Open When Springs are Charged.
LS/2—Limit Switch Contact Open When Springs are Discharged, Closed When Springs are Charged.
52/b—Contact Open When Breaker is Closed
52X—Latch Release Coil
52Y—Control Coil
52Y/1—Lockout Relay Contact, Normally Open
52Y/2—Lockout Relay Contact, Normally Closed

Dwg. 703398

Fig. 2—Schematic Diagram of Closing Circuit

INSTRUCTIONS FOR
TYPE K-225, K-600 AND K-1600 CIRCUIT BREAKERS
DRAWOUT MOUNTED

INTRODUCTION

These instructions apply to the type K-225, K-600, and K-1600 circuit breakers (K-Line). These circuit breakers can be furnished as a two-pole or three-pole circuit breaker having either a manually or electrically operated mechanism. A three-pole manually operated circuit breaker is shown on the cover, and an electrically operated circuit breaker is shown in Fig. 1. Two-pole construction is similar except that the center pole is omitted.

TRANSPORTATION DAMAGE

If damage or loss is evident, file a claim at once with the carrier and promptly notify the I-T-E Circuit Breaker Company.

STORAGE

It is recommended that the circuit breakers be installed in their permanent location even though they may not be placed in service for some time.

The circuit breaker may be stored and locked in the "DISCONNECTED" position in its compartment with the door closed. Both the primary and control separable contacts are disconnected in this position.

If the circuit breakers cannot be installed in their permanent location, they can be stored in their shipping cartons as protection against dust, dirt, and damage.

GENERAL INFORMATION

The following sections are pertinent to the basic operation of the circuit breaker.

OPERATING MECHANISM

Two types of operating mechanism are available; either the manually operated mechanism as shown on the circuit breaker in the cover photo or the electrically operated mechanism as shown on the circuit breaker in Fig. 1. The manually and electrically operated mechanism are interchangeable on circuit breakers having the same "type" designation.

CONTROL DEVICE

The control device (7, Fig. 6) is furnished on electrically operated circuit breakers. The device is mounted below and to the left of the mechanism. The control device contains three electrical components, the limit switch (LS), the lockout relay (52Y), and the latch release relay (52X). The schematic diagram of the closing circuit (Fig. 2) clearly illustrates the function of this device. In addition to its electrical functions, the base of the device provides a terminal block for the circuit breaker wiring.

RACKING MECHANISM

The racking mechanism may be used to move the circuit breaker to any one of its three positions ("CONNECTED," "TEST" or "DISCONNECTED"). All of these positions are attainable with the cubicle door closed. The racking shutter (15, Fig. 1), which must be lifted to gain access to the racking mechanism, is interlocked with the circuit breaker so that the circuit breaker contacts must be open before the shutter may be lifted to rack the circuit breaker to another position. The circuit breaker can not be closed when the shutter is open. The circuit breaker may be padlocked open by means of the locking hasp. This automatically locks the racking mechanism. With the "TRIP" button (13, Fig. 1) depressed, the locking hasp (11, Fig. 1) may be pulled outward, accommodating from one to three padlocks, when the shutter is closed and the circuit breaker is tripped. The shutter can not be lifted and the breaker contacts can not be closed when the locking hasp is restrained by one or more padlocks.

AUTOMATIC TRIP INDICATOR

(Alarm and Lockout)

The automatic trip indicator (9, Fig. 1) extends through the escutcheon and provides a positive indication when overcurrent or undervoltage tripping has occurred. The indicator should be manually reset after each indication by pushing the indicator to its normal position. The alarm contacts and/or lockout attachment, if provided, are manually reset by this indicator. Reset is mandatory if these features are provided.

PADLOCKING DEVICE

The padlocking device (11, Fig. 1), when withdrawn and padlocked, prevents unauthorized closing of the circuit breaker. To withdraw the locking hasp, the manual trip button (13, Fig. 1) must be depressed. The locking hasp will accommodate from one to three padlocks.

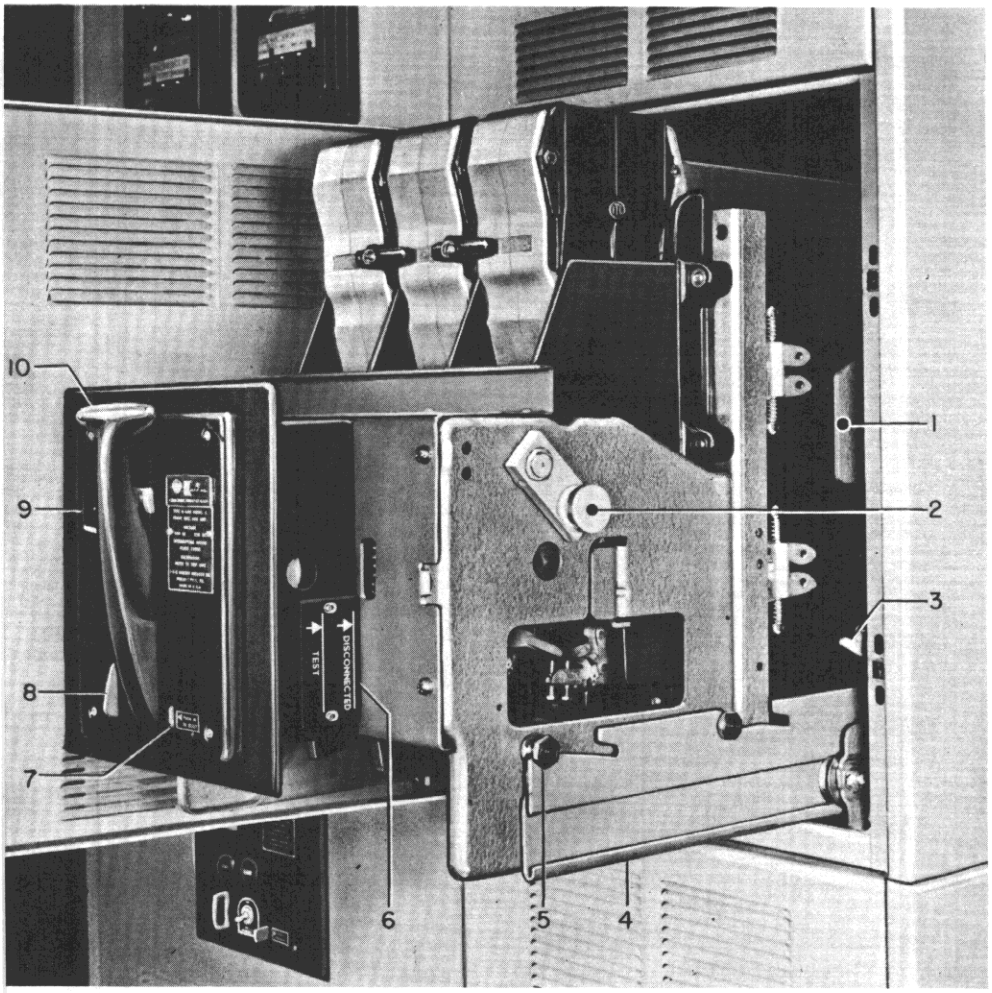

1 Cradle Assembly
2 Racking Cam Assembly
3 Latch
4 Track
5 Positioning Pin
6 Position Indicator
7 Automatic Trip Indicator
8 Locking Hasp
9 Racking Shutter
10 Manual Closing Handle

Fig. 3—Type K-600 Circuit Breaker on Tracks Ready to be Placed in Compartment

Dwg. S-14388

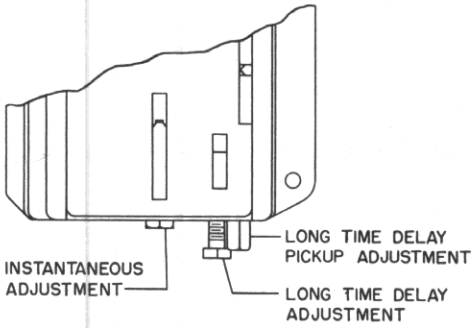

Fig. 4—Type OD-3 Overcurrent Trip Device, Partial View Showing Adjustable Features

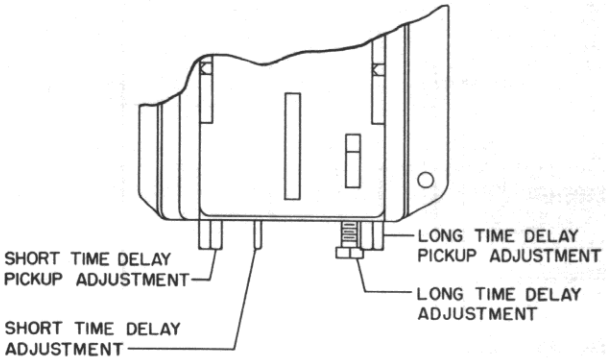

Fig. 5—Type OD-4 Overcurrent Trip Device, Partial View Showing Adjustable Features

OVERCURRENT TRIP DEVICES

Type OD-3 Dual Overcurrent Trip Device

The type OD-3 overcurrent trip device, for general purpose applications, provides long-time delay tripping on moderate overcurrents which are above the long-time pickup setting; and instantaneous tripping on fault currents above the instantaneous trip setting. This device must be properly set to provide adequate protection for an electrical system. Three adjustment screws (See Fig. 4) on the bottom of the device provide independent control of the long-time pickup, instantaneous pickup, and amount of time delay. The nameplate of this device shows the settings of these adjustments and the range of settings which are available. For information on the time-current characteristics of this device, request a copy of TD-5523.

Type OD-4 Dual Selective Overcurrent Trip Device

The type OD-4 overcurrent trip device, for selective tripping applications, provides long-time delay and short-time delay tripping. Independent adjustment (See Fig. 5) of both pickup and time delay is provided for both types of tripping. The nameplate of this device shows the settings which are available. For information on the time-current characteristics of this device, request a copy of TD-5524-A, B, or C for the minimum, intermediate, and maximum long-time bands, respectively.

INSTALLATION

CAUTION: FOR INITIAL INSTALLATION, DE-ENERGIZE THE PRIMARY AND CONTROL CIRCUITS BEFORE INSERTING THE CIRCUIT BREAKER INTO THE COMPARTMENT.

INSERTING CIRCUIT BREAKER

To insert the circuit breaker into its compartment, proceed as described below:

1. The circuit breaker must be in the "OPEN" position, the racking crank turned in the counter-clockwise direction fully against its stop, and the charging power switch (10, Fig. 1) (electrically operated circuit breakers only) in the "OFF" position.
2. Open the compartment door and pull out the right-hand and left-hand tracks (4, Fig. 3) to the fully extended and latched position.
3. Using a lifting yoke, lower the circuit breaker so that the positioning pins (5, Fig. 3) (two each side of circuit breaker) rest in the cut-out sections of each track (4, Fig. 3).
4. Remove the lifting yoke and push the circuit breaker toward the compartment. The circuit breaker will slide in the cut-out sections of the tracks until the positioning pins reach the end of the cutouts. An additional positive push will automatically release the two latches (3, Fig. 3). This allows the circuit breaker to move toward the compartment until the racking cams (2, Fig. 3) stop against their guides on the cradle (1, Fig. 3).
5. Lift shutter (9, Fig. 3) covering the racking opening, insert racking crank, and turn crank clockwise, pass through the "DISCONNECTED" position, until the position indicator on the cradle shows "TEST" position.
6. Perform all steps in TABLE I, A or B.

TABLE I—Pre-Operational Inspection

A—Electrically Operated Breakers

a. Manually reset automatic trip indicator (7, Fig. 3), if required.
b. Charge closing power springs by means of removable maintenance handle (2, Fig. 6). (See NOTE under section OPERATION). Close circuit breaker by operating lever (3, Fig. 6) on control device. Trip by pushing manual "TRIP" button on escutcheon.
c. Refer to instruction card on type OD overcurrent trip device.
d. Megger out all circuits.
e. Energize the control circuit, turn charging power switch (10, Fig. 1) to "ON", and electrically close and manually trip the circuit breaker from the push buttons on the escutcheon.
f. Close and trip the circuit breaker from the remote mounted control switch, and check each auxiliary device, such as undervoltage trip, for proper operation.

B—Manually Operated Breakers

a. Manually reset automatic trip indicator (7, Fig. 3), if required.
b. Close circuit breaker by means of manual closing handle (10, Fig. 3). Trip by pushing manual "TRIP" button on escutcheon.
c. Refer to instruction card on type OD overcurrent trip device.
d. Megger out all circuits.
e. If the circuit breaker has a shunt trip device, energize the control circuit and manually close and electrically trip the circuit breaker from the remote mounted "TRIP" switch.

7. With the circuit breaker in the "OPEN" position and the charging power switch (10, Fig. 1) in the "OFF" position, insert the racking crank and turn clockwise until the position indicator on the cradle shows "CONNECTED" position.

8. Remove racking crank, place charging power switch (electrically operated circuit breakers only) in the "ON" position, energize the primary circuit, and the circuit breaker is ready for service.

REMOVING THE CIRCUIT BREAKER

To move the circuit breaker to the "TEST" position or to remove it from the compartment, proceed as follows:

1. With the compartment door closed, trip the circuit breaker by means of the remote mounted control switch or manual "TRIP" button (4, Fig. 8) on the escutcheon.
2. Lift racking shutter (2, Fig. 8), insert racking crank and turn counter-clockwise until position indicator (6, Fig. 3) on the right-hand side of the escutcheon shows "TEST" position. (NOTE: The circuit breaker may be tested in this position—primary contacts are disconnected and the control contacts are connected.)
3. Continue turning the racking crank counter-clockwise until the position indicator (6, Fig. 3) on the right-hand side of the escutcheon shows "DISCONNECTED" position.
4. Open compartment door and discharge closing springs (electrically operated breakers only) by lifting the emergency close lever (3, Fig. 6) on the control device and then pushing the manual trip button on the escutcheon. Place charging power switch (9, Fig. 9) in the "OFF" position.

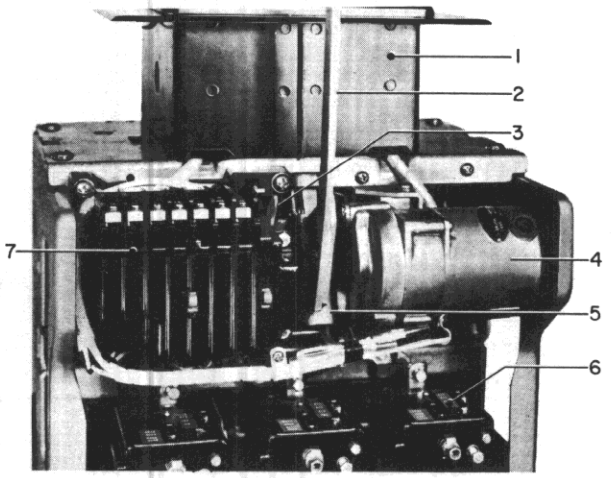

1 Escutcheon Assembly
2 Removable Maintenance Handle
3 Emergency Close Lever
4 Motor
5 Carrier
6 Overcurrent Trip Device
7 Control Device

Fig. 6—Partial Bottom View of Electrically Operated Circuit Breaker, Showing Removable Maintenance Handle Positioned for Closing

5. Insert racking handle and crank counter-clockwise as far as the stops will allow.
6. Pull circuit breaker forward until tracks (4, Fig. 3) are in the fully extended and latched position.
7. Using a lifting yoke, just pick up the circuit breaker weight.
8. With a positive pull, release positioning pins from cut-out sections of the tracks.
9. Remove circuit breaker from tracks by means of lifting yoke.
10. Release latch (3, Fig. 3) on each track, push tracks into the compartment, and close compartment door.

OPERATION

The circuit breakers are designed for either manual or electrical operation. Electrically operated circuit breakers may be closed manually for maintenance purposes by using the maintenance handle (2, Fig. 6) to manually charge the closing springs, and the emergency close lever (3, Fig. 6) to close the circuit breaker.

EMERGENCY OPERATION

Electrically operated circuit breakers may be closed manually by a removable maintenance handle (4, Fig. 7) for emergency operation.

The removable maintenance handle (4) is first positioned in two slots in the pawl carrier (2). The handle is then raised and lowered in a pumping motion until the pawl carrier (2) no longer rotates the ratchet wheel (1). The breaker closing springs now fully charged are ready for a closing operation which is done by raising the emergency close lever (6) on the control device (5).

The motor crank arm (3) will stop occasionally in such a position as to prevent a full racking stroke. Should this happen, the motor crank arm (3) will have to be rotated manually. Insert the pointed end of the handle "A" through the lower slot of pawl carrier (2) and against the motor crank arm (3). Hook the handle on slot of pawl carrier at "B" and bear down so as to force the motor crank arm (3) to move. The circuit breaker closing springs may then be charged as described in paragraph above.

Refer to TABLE II for the possible means of charging, closing, and tripping the circuit breaker.

MAINTENANCE

It is recommended that a maintenance program be established for inspecting the circuit breaker at least once every six months and, as soon as possible, after a short circuit or severe overload interruption.

For maintenance instructions, request copies of IB-5724 from the nearest Sales Office of the I-T-E Circuit Breaker Company.

TABLE II—Methods of Operation

Electrically Operated Breakers				Manually Operated Breakers			
Position			Operation and Method	Position			Operation and Method
Connected	Test	Disconnected		Connected	Test	Disconnected	
			CHARGING:				CHARGING AND CLOSING:
x	x		1. Electrical—①Motor	x	x	x	1. Manual Closing Handle
ⓧ	x	x	2. Manual—②Removable maintenance handle				TRIPPING:
			CLOSING:	x	x		1. Electrical (If shunt trip or under-voltage trip is provided)—Remote "TRIP" switch.
			1. Electrical—				
x	x		a. Remote "CLOSE" switch	x	x	x	2. Manual—Manual "TRIP" button
	x		b. Local "CLOSE" button				
ⓧ	x	x	2. Manual—③Lever on control device				
			TRIPPING:				
x	x		1. Electrical—Remote "TRIP" switch				
x	x	x	2. Manual—Manual "TRIP" button				

ⓧ Operation requires compartment door to be open and therefore is not recommended when the circuit breaker is energized.

① The charging power switch (9, Fig. 9) must be in the "ON" position.

② Place maintenance handle as shown in Fig. 6, and operate with a ratchet type motion.

③ Lift lever (3, Fig. 6), at front-right of control device, to manually release latch and close circuit breaker.

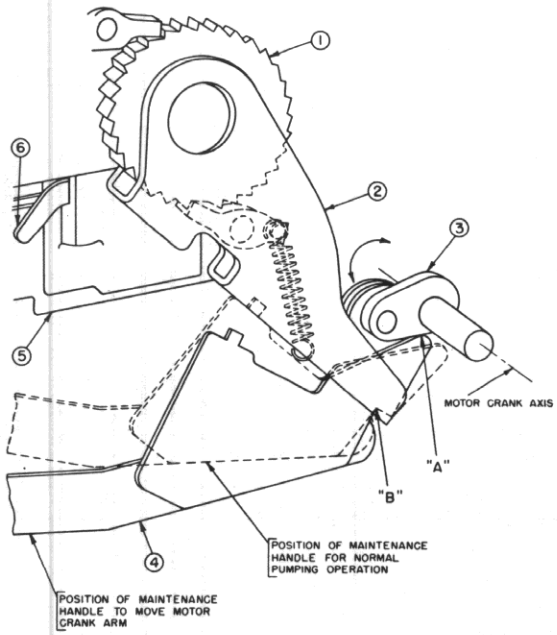

1 Ratchet Wheel
2 Pawl Carrier
3 Motor Crank Arm
4 Removable Maintenance Handle
5 Control Device
6 Emergency Close Lever

Fig. 7—Method of Applying Maintenance Handle for Charging Closing Springs

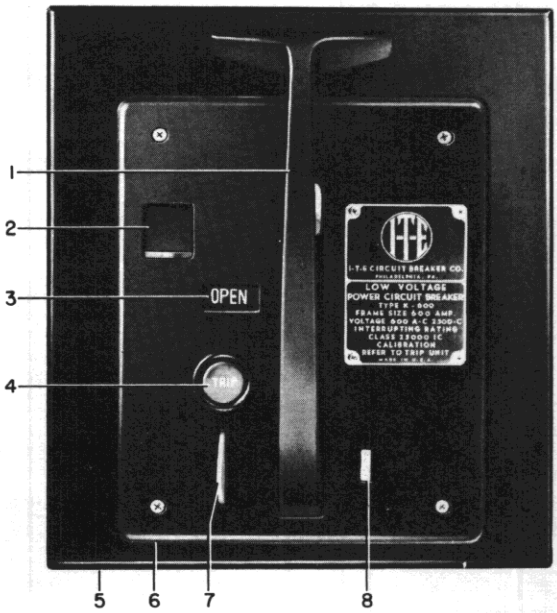

1 Manual Closing Handle
2 Racking Shutter
3 Visual Indicator
4 Manual Trip Button
5 Dust Plate
6 Escutcheon
7 Locking Hasp
8 Automatic Trip Indicator

Fig. 8—Front View of Escutcheon Assembly for Manually Operated Circuit Breaker

Dwg. S-14792
Photo. 30367-RA

WARNING: KEEP HANDS CLEAR OF ALL OPERATING PARTS. THE CLOSING SPRINGS ON ELECTRICALLY OPERATED CIRCUIT BREAKERS ARE CHARGED WHEN THE CIRCUIT BREAKER IS IN THE OPEN POSITION.

DE-ENERGIZE THE PRIMARY CIRCUIT BEFORE MAKING ANY INSPECTIONS, ADJUSTMENTS, OR REPLACEMENT OF PARTS.

Discharging Closing Springs

The closing springs of manually operated circuit breakers are discharged by each closing operation.

The closing springs of electrically operated circuit breakers are charged whenever the contacts are open, the charging power switch is "ON", and control power is available. Two methods of discharging the closing springs are necessary; one, for the circuit breaker when the control circuit is energized; and the second, when the control circuit is de-energized.

With the control circuit energized, discharge the closing springs as follows:

1. Close the circuit breaker with the local "CLOSE" button (4, Fig. 9).
2. Place charging power switch (9, Fig. 9) in the "OFF" position.
3. Open the circuit breaker by means of the manual "TRIP" button (5, Fig. 9).
4. The closing springs are now discharged.

If the control circuit is de-energized, discharge the closing springs as follows:

1. Lift lever (3, Fig. 6) on the control device to manually release latch and close the circuit breaker.
2. Open the circuit breaker by means of the manual "TRIP" button (5, Fig. 9).
3. The closing springs are now discharged.
4. Place charging power switch (9, Fig. 9) in the "OFF" position.

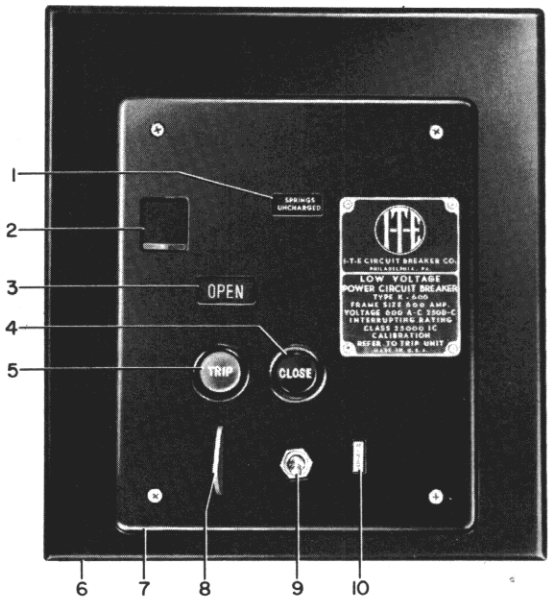

1	Spring Charge Indicator	6	Dust Plate
2	Racking Shutter	7	Escutcheon
3	Visual Indicator	8	Locking Hasp
4	Electric Close Button	9	Charging Power Switch
5	Manual Trip Button	10	Automatic Trip Indicator

Fig. 9—Front View of Escutcheon Assembly for Electrically Operated Circuit Breaker

RENEWAL PARTS

To order renewal parts, address the nearest Sales Office of the I-T-E Circuit Breaker Company. Specify the complete nameplate data, description of parts, and quantity required.

To facilitate the ordering of renewal parts, a copy of RP-5801 will be furnished on request.

These instructions do not purport to cover all details or variations in equipment nor to provide for every possible contingency to be met in connection with installation, operation, or maintenance. Should further information be desired or should particular problems arise which are not covered sufficiently for the purchaser's purposes, the matter should be referred to the I-T-E Circuit Breaker Company.