BBC
BROWN BOVERI

IB 6.1.1.7-2B

# Installation/Maintenance Instructions

## I-T-E Power-Shield®
## Solid State Trip Device

## Type LSS Solid State Trip Device and Type 505 Test Set

For LK800 thru 4200A. Circuit Breakers

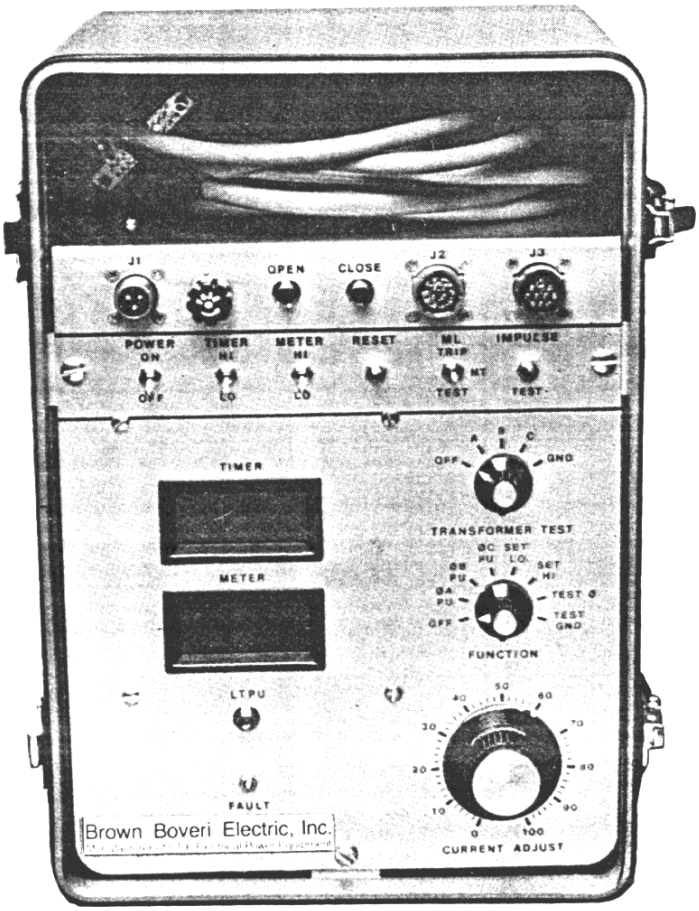


Brown Boveri Electric

## TABLE OF CONTENTS

Introduction . . . . . Pg. 3
Precautions . . . . . Pg. 3
Operating Principles . . . . . Pg. 4
Settings . . . . . Pg. 4
Optional Features . . . . . Pg. 5
Time Current Characteristics . . . . . Pg. 6
Four Wire Double Ended Systems . . . . . Pg. 10
Testing - Type 505 Test Set . . . . . Pg. 12
Testing - Primary Current Method . . . . . Pg. 20
Maintenance . . . . . Pg. 21

READ THIS INSTRUCTION BOOK CAREFULLY BEFORE STARTING ANY TESTING. BE SURE TO OBSERVE THE PRECAUTIONS STATED THROUGHOUT THIS BOOK.

These instructions do not purport to cover all details or variations in equipment nor to provide for every possible contingency to be met in connection with installation, operation, or maintenance. Should further information be desired or should particular problems arise which are not covered sufficiently for the purchaser's purposes the matter should be referred to the nearest District Office.

## INTRODUCTION

The Powershield unit is a solid state trip device used to protect the power system against damage caused by overload and faults. It is supplied as an integral part of the I-T-E type LK low voltage power circuit breaker.

Four basic trip elements within the Powershield trip unit perform the protective functions: long-time, short-time, instantaneous, and ground. Models with various combinations of these functions are available (see table 1). Selection is based on the protection and coordination requirements for the particular power system.

The trip unit is completely tested prior to shipment. Since there are no mechanical devices which may have lost adjustment during shipment, no readjustments, other than making the required settings, need be made prior to placing in service. Nor is maintenance required in the usual sense of cleaning, adjusting, or lubricating.

Electrical tests which may be made as part of a routine procedure are included in this book. The frequency of testing will vary from user to user depending on many factors. A typical interval of 1 or 2 years is suggested.

### TABLE 1 - POWER SHIELD STANDARD TYPES

| SOLID STATE TRIP DEVICE | TRIP ELEMENTS | | | | | TIME-CURRENT CHARACTERISTICS CURVES | | |
|---|---|---|---|---|---|---|---|---|
| TYPE | LONG-TIME * | SHORT-TIME * | INSTANTANEOUS | GROUND * | OPERATION INDICATORS | OVCT. | GROUND | USAGE |
| LSS 1 | (1 BAND) X | | X | | NONE | TD 9058 | | GENERAL PURPOSE |
| LSS 1G | (1 BAND) X | | X | X | NONE | TD 9058 | TD 9062 | GENERAL PURPOSE |
| LSS 2 | (1 BAND) X | X | | | NONE | TD 9068 | | DUAL SELECTIVE |
| LSS 4 | X | X | | | OPTIONAL | TD 9060 | | DUAL SELECTIVE |
| LSS 4G | X | X | | X | OPTIONAL | TD 9060 | TD 9062 | DUAL SELECTIVE |
| LSS 5 | X | X | X | | OPTIONAL | TD 9060 | | TRIPLE SELECTIVE |
| LSS 5G | X | X | X | X | OPTIONAL | TD 9060 | TD 9062 | TRIPLE SELECTIVE |
| LSS 6 | X | | X | | OPTIONAL | TD 9059 | | GENERAL PURPOSE |
| LSS 6G | X | | X | X | OPTIONAL | TD 9059 | TD 9062 | GENERAL PURPOSE |

* 3 Delay Bands Provided (Except As Noted)

## PRECAUTIONS

The following precautions should be observed before placing the unit in service:

Select proper settings. Be sure that no tap setting pin has been left in a TEST location.

Check that the connection cable is properly seated and locked in position with its retaining clip.

## OPERATING PRINCIPLES

The tripping system for a power circuit breaker consists of 3 current sensors, a solid state trip unit, a latch release device, and the inter-connecting wiring. There is one current sensor mounted on each primary conductor (phase) of the breaker. These sensors are similar to current transformers and provide a current proportional to the primary current. This secondary current provides both the signal current to be measured by the trip unit, and the power required to operate the latch release and the trip unit. The solid state trip unit compares the current flowing to the pickup values set on the front panel for the various functions. Should the current exceed the set level, the time delay circuits are actuated. Should excessive current persist for the required delay, the output circuit is triggered, delivering power to the latch release and opening the circuit breaker.

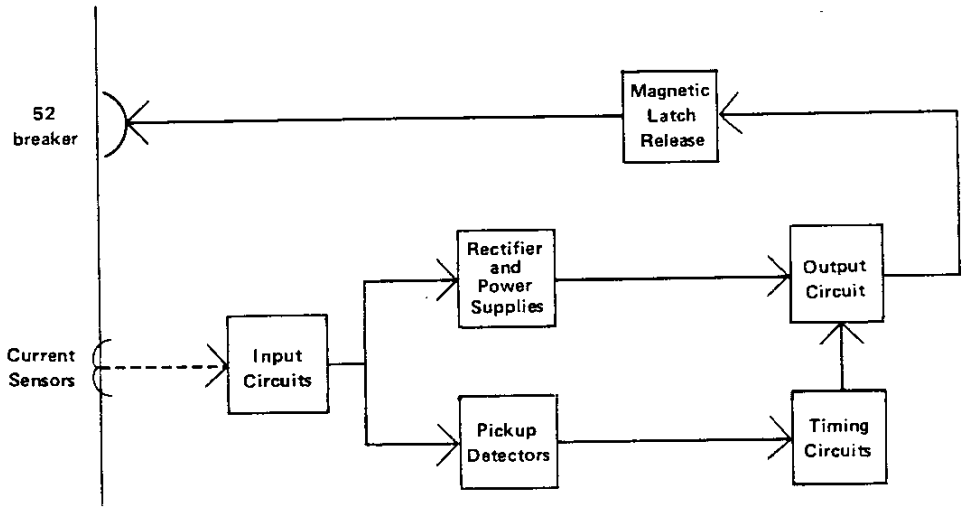


Figure 1: Block Diagram for Tripping System

## AVAILABLE SETTINGS

### Ampere Tap Setting

The ampere taps available are based on the frame size of the breaker. The ampere tap selector switch has 2 positions.The ampere taps are listed in table 2.

### Long-Time Setting

The long-time pickup current may be set at 0.6, 0.7, 0.8, 0.9, or 1.0 times the chosen ampere tap.

Three long-time delay bands are provided, except on the Type LSS1 unit which has a fixed delay characteristic. The three bands are labeled MAX (maximum), INT (intermediate), and MIN (minimum).

### Short-Time Settings

The short-time pickup current may be set at 2, 3, 4, 5, 7, or 10 times the chosen ampere tap.

Three short-time delay bands are provided: MAX (maximum), INT (intermediate), and MIN (minimum).

### Instantaneous Setting

The instantaneous pickup current may be set at 3, 4, 5, 7, or 12 times the chosen ampere tap.

### Ground Fault Settings

The ground pickup current tap settings vary with the breaker rating. They are listed in table 2. These settings are marked on the front panel in hundreds of amperes (e.g.: 6 x100 = 600 amperes pickup).

Three ground delay bands are provided: MAX (maximum), INT (intermediate), MIN (minimum).

TABLE 2: AMPERE TAP AND GROUND TAP SETTINGS

| BREAKER RATING | SENSOR RATING | AMPERE TAP SETTINGS | GROUND PICKUP TAP SETTINGS (AMPERES) |
|---|---|---|---|
| 800A | 200A | 100,200 | 100,300,600,1200 |
| 800A | 800A | 400,800 | 100,300,600,1200 |
| 1600A | 800A | 400,800 | 100,300,600,1200 |
| 1600A | 1600A | 800,1600 | 300,600,900,1200 |
| 2500A | 2500A | 1250,2500 | 300,600,900,1200 |
| 3000A | 3000A | 1500,3000 | 500,800,1000,1200 |
| 3200A | 3200A | 1600,3200 | 500,800,1000,1200 |
| 4000A | 4000A | 2000,4000 | 500,800,1000,1200 |
| 4200A | 4200A | 2100,4200 | 500,800,1000,1200 |

## HOW TO MAKE SETTINGS

The values of pickup current and delay times to be set must be determined by an analysis of the protection and coordination requirements of the power system. As settings are placed closer to the normal equipment characteristics to obtain maximum protection, the more likely are nuisance operations (for example, due to motor inrush on starting). Therefore, as settings are calculated, appropriate compromises must be made between protection and continuity of service.

The ampere tap setting is made by means of the 2 position slide switch on the front panel of the trip unit.

All other settings are made by means of tap pins on the front panel. The long-time, short-time, and instantaneous trip functions are calibrated in terms of multiples of the ampere tap setting. The ground function is calibrated directly in amperes.

As an example of settings, consider the following:

2500 Amp breaker with LSS 6 trip unit
Long-Time pickup required: 1500 amperes
Instantaneous pickup required: 15000 amperes
Ground pickup required: 1200 amperes.

(1) Set AMPERE TAP switch at 2500 amperes.
(2) Set LONG-TIME tap pin at .6 setting.
2500 x 0.6 = 1500 amperes.
(3) Set INSTANTANEOUS tap pin at 7 setting.
2500 x 7 = 17500 amperes
(4) Set GROUND tap pin at 12 setting.
12 x 100 = 1200 amperes

**CAUTION CAUTION CAUTION CAUTION**

TAP PIN POSITIONS LABELED TEST ARE USED TO DEFEAT THE RESPECTIVE TRIP FUNCTION DURING TESTING OF THE TRIP UNIT. TAP PINS MUST BE REMOVED FROM THE TEST LOCATIONS AND RETURNED TO THEIR PROPER SETTINGS PRIOR TO PLACING THE UNIT BACK IN SERVICE.

If a tap pin is removed completely, the setting reverts to the minimum value.

## OPTIONAL FEATURES

### Operation Indicators (Optional)

Operation indicators can be provided as an optional feature on certain types of trip units. See listing in table 1.

When indicators are specified, one indicator will be provided for each of the tripping functions: LONG-TIME, SHORT-TIME, INSTANTANEOUS, and GROUND. Therefore, up to 4 indicators will be supplied, depending on the number of tripping functions on the particular trip unit.

When a trip occurs, the indicator for the function which tripped will show orange. The indicator will retain its position despite shock or vibration until reset manually to black by means of a small magnet mounted on the front panel of the trip unit.

### Load Alarm (Optional)

A load alarm accessory is available to provide a contact closure when the primary current exceeds the set value. The load alarm setting is adjustable from 50 to 100 percent of the ampere tap setting.

### Remote Ground Indication (Optional)

This feature provides a momentary contact closure when a ground trip operation occurs. A remote alarm circuit may be wired to this contact.

The load alarm and ground indication contacts are rated at 125Vdc:

30 amperes momentary
5 amperes continuous
0.3 amperes break, inductive

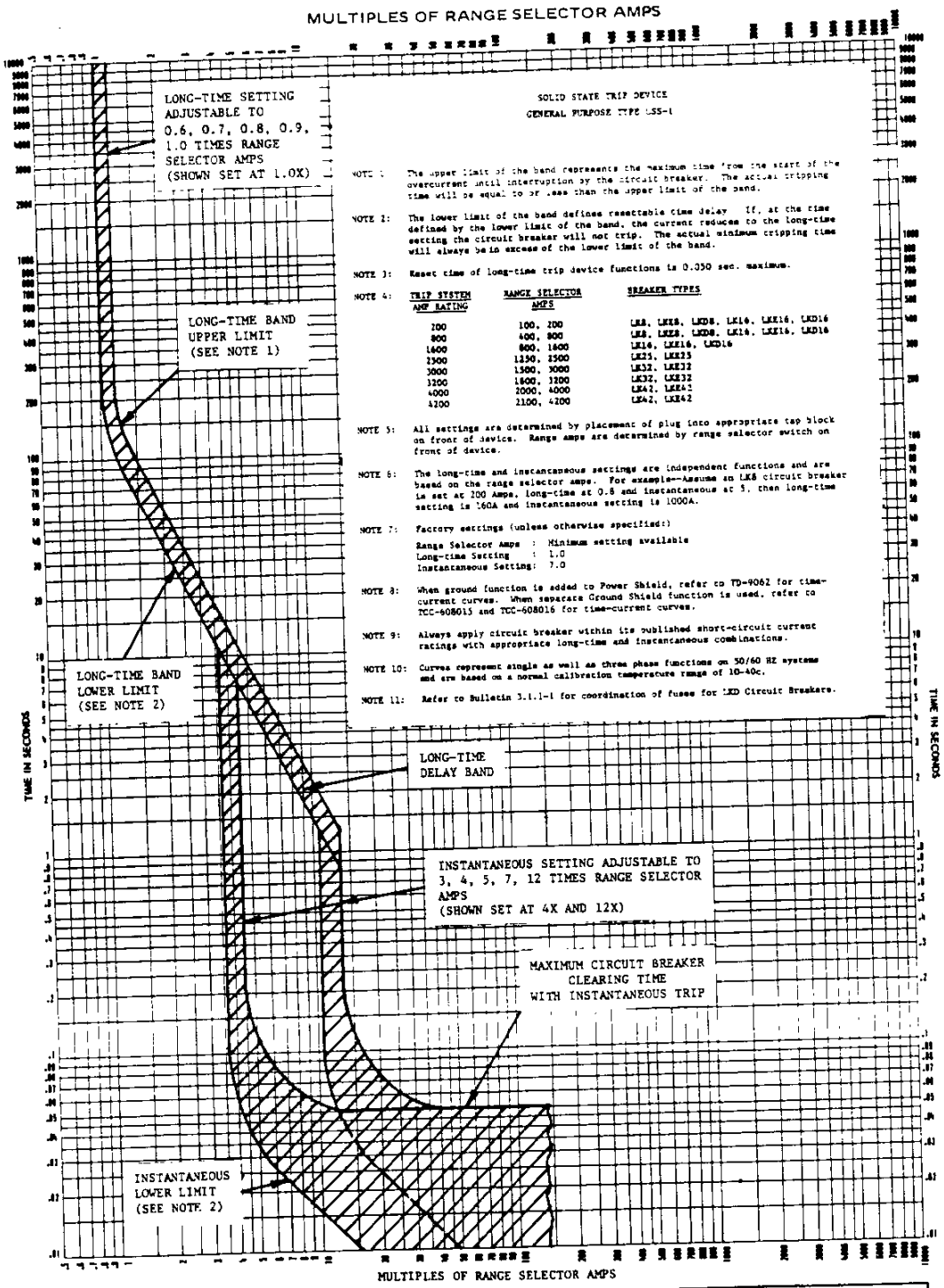


SOLID STATE TRIP DEVICE
GENERAL PURPOSE TYPE LSS-1

NOTE 1: The upper limit of the band represents the maximum time from the start of the overcurrent until interruption by the circuit breaker. The actual tripping time will be equal to or less than the upper limit of the band.

NOTE 2: The lower limit of the band defines resettable time delay. If, at the time defined by the lower limit of the band, the current reduces to the long-time setting the circuit breaker will not trip. The actual minimum tripping time will always be in excess of the lower limit of the band.

NOTE 3: Reset time of long-time trip device functions is 0.050 sec. maximum.

NOTE 4:

| TRIP SYSTEM AMP RATING | RANGE SELECTOR AMPS | BREAKER TYPES |
|---|---|---|
| 200 | 100, 200 | LK8, LKE8, LKD8, LK16, LKE16, LKD16 |
| 800 | 400, 800 | LK8, LKE8, LKD8, LK16, LKE16, LKD16 |
| 1600 | 800, 1600 | LK16, LKE16, LKD16 |
| 2500 | 1250, 2500 | LK25, LKE25 |
| 3000 | 1500, 3000 | LK32, LKE32 |
| 3200 | 1600, 3200 | LK32, LKE32 |
| 4000 | 2000, 4000 | LK42, LKE42 |
| 4200 | 2100, 4200 | LK42, LKE42 |

NOTE 5: All settings are determined by placement of plug into appropriate tap block on front of device. Range amps are determined by range selector switch on front of device.

NOTE 6: The long-time and instantaneous settings are independent functions and are based on the range selector amps. For example--Assume an LK8 circuit breaker is set at 200 Amps, long-time at 0.8 and instantaneous at 5, then long-time setting is 160A and instantaneous setting is 1000A.

NOTE 7: Factory settings (unless otherwise specified:)

Range Selector Amps : Minimum setting available
Long-time Setting : 1.0
Instantaneous Setting: 7.0

NOTE 8: When ground function is added to Power Shield, refer to TD-9062 for time-current curves. When separate Ground Shield function is used, refer to TCC-608015 and TCC-608016 for time-current curves.

NOTE 9: Always apply circuit breaker within its published short-circuit current ratings with appropriate long-time and instantaneous combinations.

NOTE 10: Curves represent single as well as three phase functions on 50/60 HZ systems and are based on a normal calibration temperature range of 10-40c.

NOTE 11: Refer to Bulletin 3.1.1-1 for coordination of fuses for LKD Circuit Breakers.

| | |
|---|---|
| TIME-CURRENT CHARACTERISTIC CURVES Solid State Trip Device I-T-E types: LSS-1 Long-time and Instantaneous, General Purpose for LK, LKE and LKD Low Voltage Power Circuit Breakers. | BBC Brown Boveri Electric, Inc. |
| | DWN BY EFS DATE 5-22-80 |
| | NO. TD-9058 REV 5 |

Figure 2: TIME CURRENT CHARACTERISTIC CURVE FOR TYPE LSS - 1 TRIP UNIT.

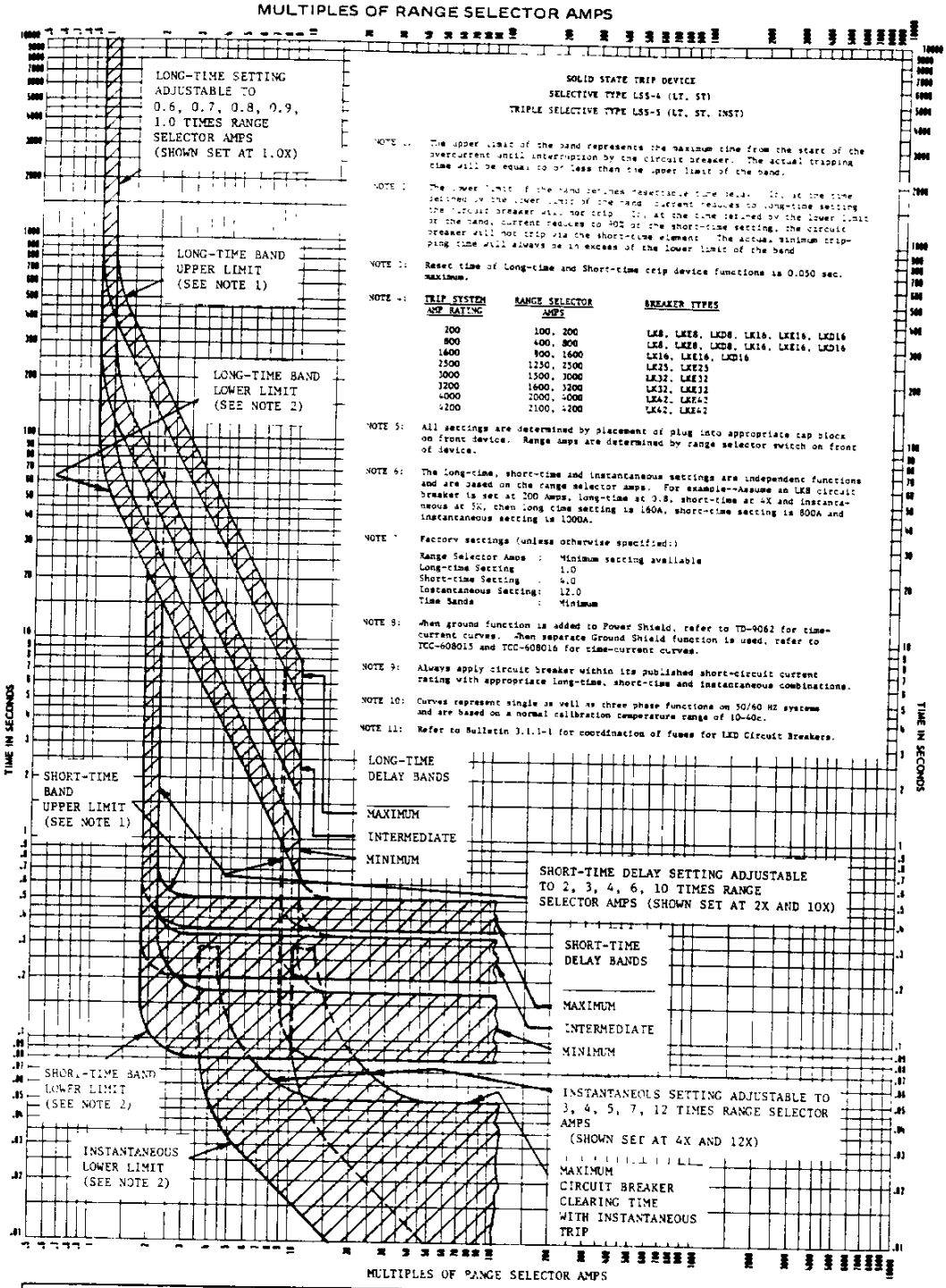


| | |
|---|---|
| TIME-CURRENT CHARACTERISTIC CURVES Solid State Trip Device I-T-E types:<br>LSS-4 Long-time and Short-time, Selective.<br>LSS-5 Long-time, Short-time and Instantaneous, Triple Selective.<br>for Type LK, LKE and LKD Low Voltage Power Circuit Breakers. | BBC Brown Boveri Electric, Inc.<br>DWN BY EFS DATE 5-22-80<br>NO. TD-9060 REV 5 |

Figure 3: TIME CURRENT CHARACTERISTIC CURVES: LONG-TIME, SHORT-TIME, INSTANTANEOUS FUNCTIONS FOR ALL UNITS EXCEPT LSS - 1, LSS - 1G.

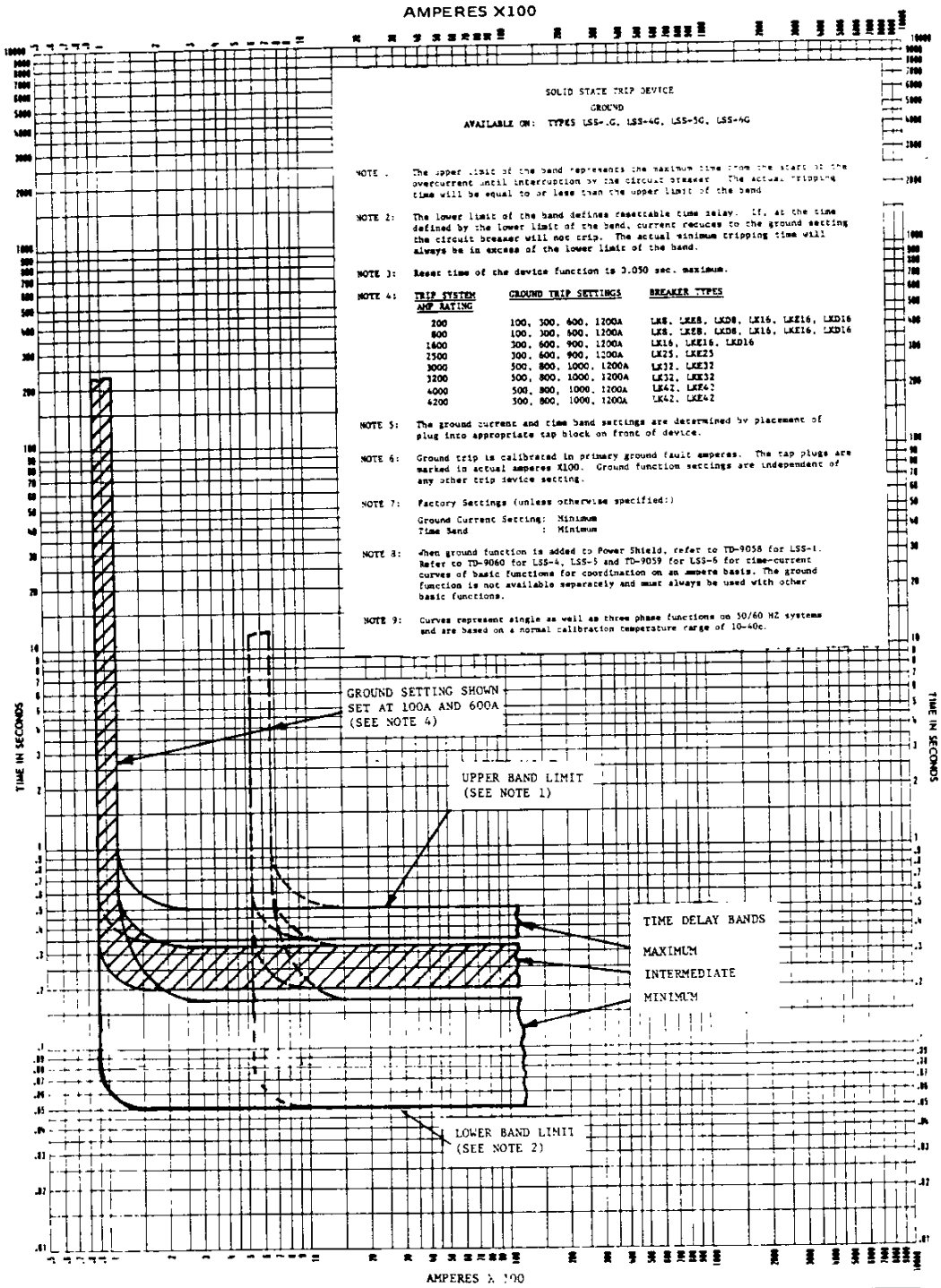


SOLID STATE TRIP DEVICE

GROUND

AVAILABLE ON: TYPES LSS-1G, LSS-4G, LSS-5G, LSS-6G

NOTE 1: The upper limit of the band represents the maximum time from the start of the overcurrent until interruption by the circuit breaker. The actual tripping time will be equal to or less than the upper limit of the band.

NOTE 2: The lower limit of the band defines resettable time delay. If, at the time defined by the lower limit of the band, current reduces to the ground setting the circuit breaker will not trip. The actual minimum tripping time will always be in excess of the lower limit of the band.

NOTE 3: Reset time of the device function is 3.050 sec. maximum.

NOTE 4:

| TRIP SYSTEM AMP RATING | GROUND TRIP SETTINGS | BREAKER TYPES |
|---|---|---|
| 200 | 100, 300, 600, 1200A | LK8, LKE8, LKD8, LK16, LKE16, LKD16 |
| 800 | 100, 300, 600, 1200A | LK8, LKE8, LKD8, LK16, LKE16, LKD16 |
| 1600 | 300, 600, 900, 1200A | LK16, LKE16, LKD16 |
| 2500 | 300, 600, 900, 1200A | LK25, LKE25 |
| 3000 | 500, 800, 1000, 1200A | LK32, LKE32 |
| 3200 | 500, 800, 1000, 1200A | LK32, LKE32 |
| 4000 | 500, 800, 1000, 1200A | LK42, LKE42 |
| 4200 | 500, 800, 1000, 1200A | LK42, LKE42 |

NOTE 5: The ground current and time band settings are determined by placement of plug into appropriate tap block on front of device.

NOTE 6: Ground trip is calibrated in primary ground fault amperes. The tap plugs are marked in actual amperes X100. Ground function settings are independent of any other trip device setting.

NOTE 7: Factory Settings (unless otherwise specified:)

Ground Current Setting: Minimum
Time Band : Minimum

NOTE 8: When ground function is added to Power Shield, refer to TD-9058 for LSS-1. Refer to TD-9060 for LSS-4, LSS-5 and TD-9059 for LSS-6 for time-current curves of basic functions for coordination on an ampere basis. The ground function is not available separately and must always be used with other basic functions.

NOTE 9: Curves represent single as well as three phase functions on 50/60 HZ systems and are based on a normal calibration temperature range of 10-40c.

| | |
|---|---|
| TIME-CURRENT CHARACTERISTIC CURVES Solid State Trip Device for ground function I-T-E types: LSS-1G, LSS-4G, LSS-5G, LSS-6G for type LK, LKE and LKD Low Voltage Power Circuit Breakers. | BBC Brown Boveri Electric, Inc. DWN BY EFS DATE 1-15-80 NO TD-9062 REV 5 |

Figure 4: TIME CURRENT CHARACTERISTIC CURVE; GROUND FAULT FUNCTION.

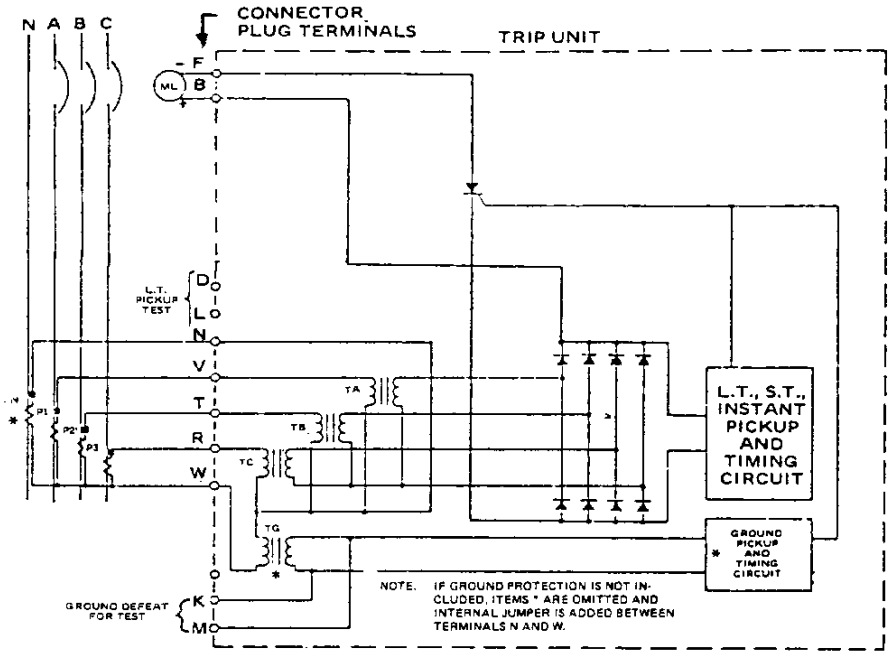


Fig. 5 — Typical Wiring Diagram of Standard 3 or 4-Wire System with Ground Fault Protection

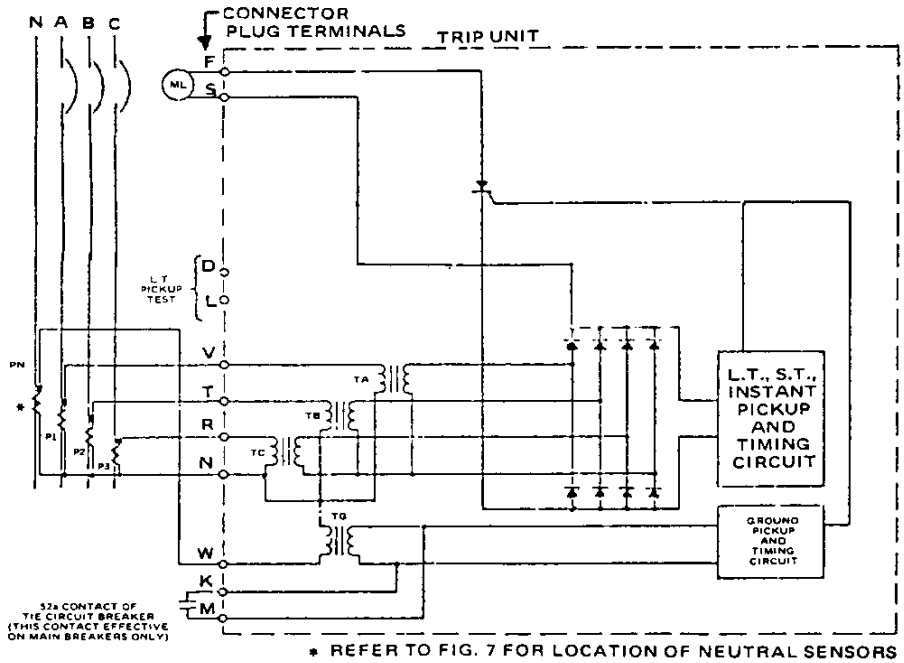


Fig. 6—Typical Wiring Diagram of Main and Tie Breakers for 4-Wire Double-Ended Systems with Ground

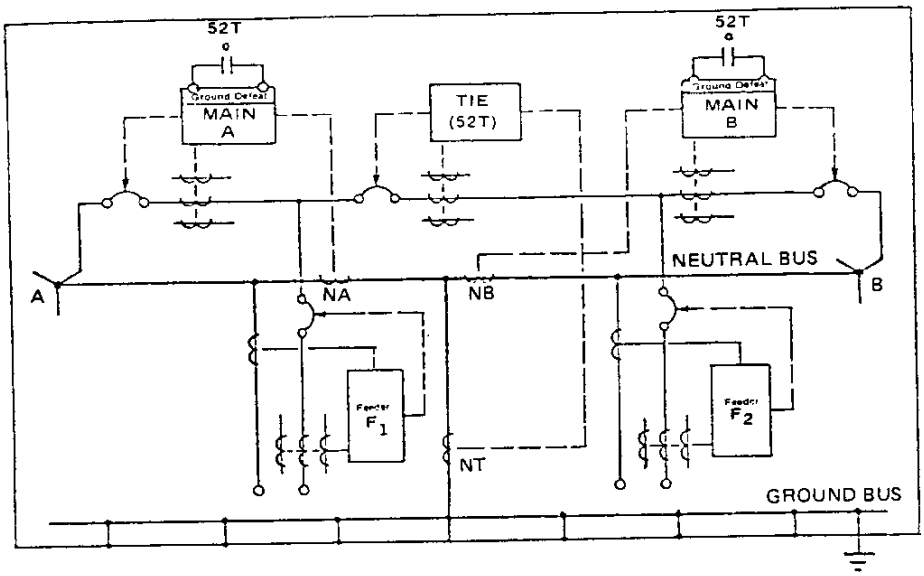


Fig. 7—Four-Wire Double-Ended System

**Four-Wire Double-Ended Systems**

The system shown in figure 7 is used for ground fault protection on a four-wire double-ended substation with tie breaker. This system assures that a bus ground fault will cause only one main breaker to trip, leaving the other main breaker in service. The ground trip signal of each main breaker is controlled by a 52/a contact of the tie breaker. Therefore, the main breakers can trip on a ground fault only when the tie breaker is open.

The following is a typical ground fault sequence. Assume that both mains and the tie breaker are closed and a ground fault occurs on bus A. The ground fault current will flow to the fault point returning via the ground bus, up the neutral to ground bus connection to the neutral points of transformers A & B. All three neutral sensors NA, NB, and NT will sense the fault current, but only the tie breaker will trip since the ground function of the main breakers is controlled by the tie breaker, 52/a contact. After the tie breaker trips, the fault current will continue to be sensed only by the main breaker "A" neutral sensor (NA). The main breaker "A" will trip, interrupting service to the feeders on side "A". Main breaker "B" remains closed, and bus "B" remains energized.

The feeder breakers and the tie breaker must be coordinated time-wise to insure that the feeder breaker will clear a ground fault before the tie breaker trips on faults downstream from the feeder breakers.

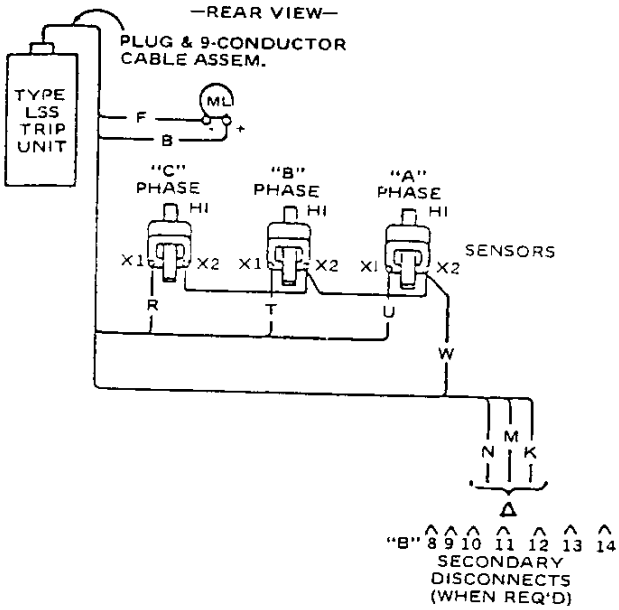


Figure 8: 3 Wire System with or without Ground Fault Protection and 4 Wire without Ground Fault Protection.

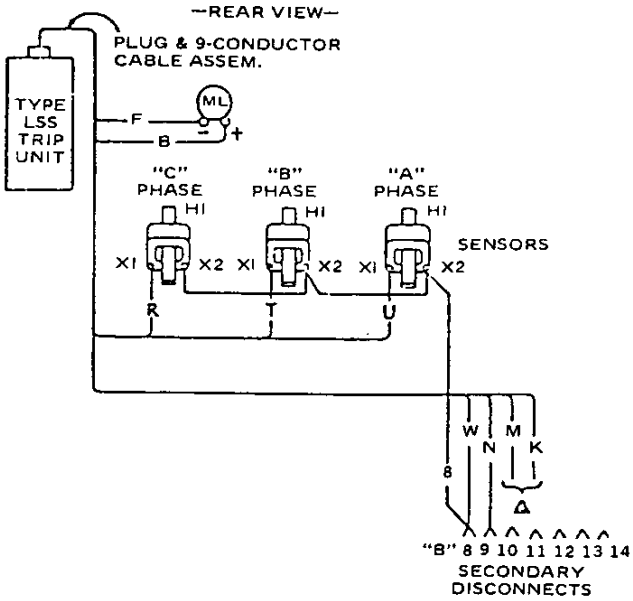


Figure 9: 4 Wire System with Ground Fault Protection.

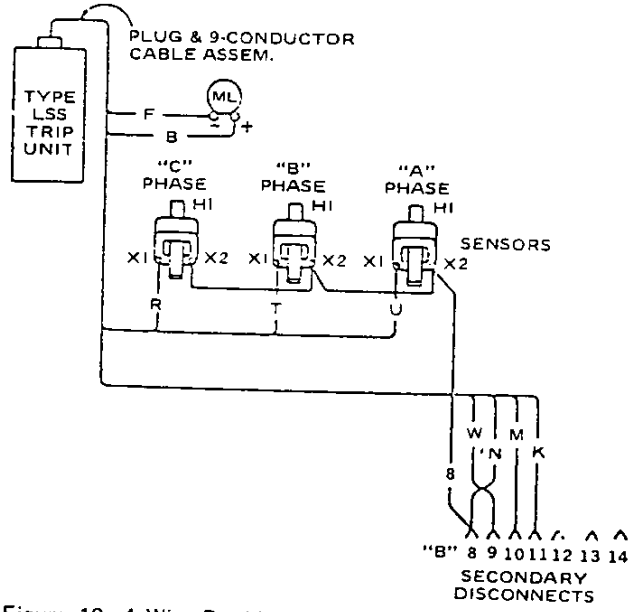


Figure 10: 4 Wire Double-ended Substation with Ground Fault Protection

▲ = Terminated. not connected to secondary disconnects. Wires long enough to reach if required later.

## POWER SHIELD TEST SET TYPE 505

### Introduction

The test set has been designed specifically for use with the "LSS" trip device, and incorporates all the required test circuitry and connecting cables in a compact portable case.

The required power is a 120V, 60Hz., single phase, 5 ampere source.

The type 505 test set will determine the pickup currents and time delays of the Long-Time, Instantaneous, Short-Time, and Ground functions of the LSS trip unit. Testing may be performed with the trip unit in place on the breaker, or off the breaker as a bench test. The test set may also be used to confirm that the current sensors are sound. The test set will also confirm that the latch release and the rest of the breaker's trip mechanism is functioning by tripping the breaker through the solid-state trip unit.

Three cables are used with the test set: (1) an AC line cord (J1); (2) a cable which connects the test set to the trip unit (J2); (3) a cable which connects the test set into the breaker wiring harness (J3).

### Description of Controls

Fuse

3 amperes, slow blow, standard AGC-3

Open/Closed Lamps

Indicate position of the simulated circuit breaker.

Power Switch

Applies power to the test set. Place in OFF position until all connections have been made.

Timer Switch

Selects the range of the digital TIMER. HI position is 0 to 999 seconds; LO position is 0 to 9.99 seconds.

Meter Switch

Selects the range of the digital AMMETER. HI position is 0 to 3 amperes; LO position is 0 to 999 milliamperes.

Reset Switch

Resets the timer and closes the simulated breaker (will not affect the position of the power circuit breaker).

ML Switch

Selects the operating mode for the power circuit breaker under test. With this switch in the TRIP position, the power circuit breaker can be tripped through its magnetic latch by the solid-state trip unit. To prevent the circuit breaker from tripping, place the switch in the NT (no trip) position. The OPEN/CLOSE lights on the test set provide simulated breaker operation. The TEST position is used to test the magnetic latch.

Impulse Switch

This switch is used to apply a transient test to check the transient immunity of the solid state trip unit.

Transformer Test Switch

This switch must be in the OFF position when the FUNCTION switch is in any position other than its OFF position.

Function Switch

Selects test to be performed on the solid state trip unit. Note. This switch must be in the OFF position when the TRANSFORMER TEST switch is in any position other than its OFF position.

Current Adjust

Sets level of test current. Dial is marked 0 to 100 (percent of rotation) for reference only.

LTPU Lamp

Indicates when pickup has occurred on the long time function. Operable only when the FUNCTION switch is in one of the (3) pickup test positions.

Fault Switch

Applies the test current to the solid state trip unit.

### Circuit Breaker Accessibility

**WARNING WARNING WARNING WARNING**

TAKE ALL NECESSARY SAFETY PRECAUTIONS. THE CIRCUIT BREAKER TO BE TESTED SHOULD BE COMPLETELY DE-ENERGIZED OR OTHERWISE DISCONNECTED FROM THE PRIMARY POWER CIRCUIT FOR COMPLETE SAFETY OF TEST PERSONNEL.

When the circuit breaker is stationary mounted, it is necessary to physically disconnect the primary cables or to otherwise open the circuit on both sides of the circuit breaker.

When the cirucit breaker is the drawout type, the circuit breaker should be withdrawn to the test position to isolate the primary circuit.

When the breaker is electrically operated, the control power can be retained for ease of operation of the circuit breaker during testing.

### Test Set Connections

Place test set power switch in the OFF position. Remove the wiring harness cable connector from the solid state trip unit and plug in the test cable (J2) in its place. Connect test cable (J3) to the wiring harness connector. (The J3 cable is not required if only a bench test of the solid state trip unit is being run). Run the test set line cord (J1) to a 120V source.

Remove the plastic faceplate cover from the trip unit.

### Test Procedures

In testing a particular function, it may be necessary to move the tap plugs of the other functions to their TEST positions; therefore, THE EXISTING SETTINGS ON THE

TRIP UNIT MUST BE NOTED BEFORE MOVING THE TAP PLUGS SO THAT THEY CAN BE RESTORED TO THEIR PROPER POSITIONS AT THE CONCLUSION OF TESTING. The tap plugs of these elements should not merely be removed, as this causes the function to revert to its minimum setting. The TEST position defeats the function, thereby preventing interference with the element under test.

**CAUTION CAUTION CAUTION CAUTION**

TAP PINS MUST BE REMOVED FROM THE TEST LOCATIONS AND RETURNED TO THEIR PROPER POSITIONS PRIOR TO PLACING THE BREAKER BACK IN SERVICE.

The CLOSE lamp must be lighted at the start of any test. If the OPEN lamp is on, operate the RESET switch to reset the test set and close the simulated breaker. Close the power circuit breaker if desired. If the breaker is left open, the OPEN/CLOSE lights on the test set will simulate breaker operation. Set the ML switch to the desired position to permit tripping or block tripping of the power circuit breaker.

If the solid state trip unit is equipped with optional target indicators, reset the targets at the start of each test. The appropriate target should be displayed when a trip operation occurs, as you test each function.

A suggested test sheet is shown on page 16. This may be reproduced and used to record your test results.

**Long-Time Function-Pickup Test**

(a) Check Table 3 for the expected value of current for the trip unit setting being tested. Note that the test current value is a function of the LONG-TIME pickup tap setting and the AMPERE TAP SETTING switch on the solid state trip unit.

(b) Place the METER switch in the HI position, ML switch in NT position.

(c) Place the TRANSFORMER TEST switch in the OFF position. Place the POWER switch in the ON position. Actuate the RESET switch once.

(d) Place the FUNCTION switch in the ØA PU position (phase A pickup).

(e) Actuate and hold the FAULT switch. Increase the test current with the CURRENT ADJUST control until the LTPU indicator lights. Slowly lower the test current until the light goes out. Slowly raise and lower the test current to determine the exact operating point. Read the pickup current on the ammeter and compare to the expected value.

(f) Release the FAULT switch and return the CURRENT ADJUST control to zero.

(g) Repeat step (e) for the phase B position and again for the phase C position of the FUNCTION switch.

**Long-Time Function-Time Delay Test**

(a) Check Table 4 for the required value of test current and for the expected value of time delay, for the LONG-TIME settings being tested. Move the SHORT TIME, GROUND, and INST. tap pins to their TEST positions if necessary to prevent interference with the test of the LONG-TIME FUNCTION.

(b) Place TIMER and METER switches in the appropriate positions for these values; usually TIMER will be HI, METER will be LO.

(c) TRANSFORMER TEST switch OFF; POWER switch ON.

(d) Observe the position of the AMPERE TAP selector switch on the solid state trip unit. If it is in the higher of its two positions, place the FUNCTION switch in the SET HI position; if in the lower position place the FUNCTION switch in the SET LO position.

(e) Actuate and release RESET switch.

(f) Actuate and hold the FAULT switch. Increase the test current to the required value using the CURRENT ADJUST and observing the AMMETER.

(g) Release the FAULT switch and place the FUNCTION switch in the TEST Ø (test phase) position.

(h) Actuate and hold the FAULT switch until the OPEN lamp lights and the TIMER stops. (The power circuit breaker should also have tripped if the ML switch was in the TRIP position).

(i) Release the FAULT switch and return CURRENT ADJUST to zero position.

(j) Observe the TIMER display and compare the test value to the expected value.

(k) Other points on the operating curve can be checked if desired by selecting additional test current points and repeating steps (a) through (j). REPEATED TESTS AT HIGH MULTIPLES ARE NOT RECOMMENDED DUE TO THE THERMAL STRESS TO THE INPUT STAGE COMPONENTS. ALLOW TIME FOR COOLING BETWEEN TESTS.

TABLE 3: TEST CURRENTS FOR LONG-TIME PICKUP FUNCTION

| | LSS LONG-TIME PICKUP Tap Setting | 0.6 | 0.7 | 0.8 | 0.9 | 1.0 |
|---|---|---|---|---|---|---|
| LSS TAP SELECTOR Switch in Low Current Position | Pickup Current Nominal | 0.55 A | 0.66 A | 0.75 A | 0.86 A | 0.98 A |
| | Pickup Current Allowable Range (See Note 1) | 0.47 to 0.63 A | 0.56 to 0.76 A | 0.64 to 0.86 A | 0.73 to 0.99 A | 0.83 to 1.13 A |
| LSS TAP SELECTOR Switch in High Current Position | Pickup Current Nominal | 1.20 A | 1.40 A | 1.60 A | 1.82 A | 2.06 A |
| | Pickup Current Allowable Range (See Note 1) | 1.02 to 1.38 A | 1.19 to 1.61 A | 1.36 to 1.84 A | 1.54 to 2.09 A | 1.75 to 2.38 A |

Note 1: Allowable range is based on ± 15% tolerance around nominal value.

TABLE 4: TEST CURRENTS AND EXPECTED TIME DELAYS FOR LONG-TIME DELAY TEST

| LSS LONG TIME PICKUP SETTING | | | 0.6 | 0.7 | 0.8 | 0.9 | 1.0 |
|---|---|---|---|---|---|---|---|
| | LSS SETTING | TEST LEVEL | | | | | |
| Test Current for LONG - TIME DELAY Test (see note 2) | LSS TAP SELECTOR Switch in Low Current Position | 3 multiples | 63 ma | 76 ma | 88 ma | 101 ma | 115 ma |
| | | 6 multiples | 135 ma | 161 ma | 180 ma | 213 ma | 242 ma |
| | | 10 multiples | 238 ma | 285 ma | 327 ma | 375 ma | 417 ma |
| | LSS TAP SELECTOR Switch in High Current Position | 3 multiples | 141 ma | 167 ma | 193 ma | 221 ma | 249 ma |
| | | 6 multiples | 296 ma | 348 ma | 395 ma | 454 ma | 518 ma |
| | | 10 multiples | 515 ma | 609 ma | 704 ma | 798 ma | 897 ma |
| Expected TIME DELAY for LSS - 1 LSS - 1G ONLY | | 3 multiples | 16–26 seconds | | | | |
| | | 6 multiples | 5–7 seconds | | | | |
| | | 10 multiples | 1.4–2.5 seconds | | | | |
| Expected TIME DELAY for ALL OTHER UNITS | MIN DELAY Setting | 3 multiples | 8–12 seconds | | | | |
| | | 6 multiples | 2–3.3 seconds | | | | |
| | | 10 multiples | 0.7–1.2 seconds | | | | |
| | INT DELAY Setting | 3 multiples | 20–35 seconds | | | | |
| | | 6 multiples | 5–8 seconds | | | | |
| | | 10 multiples | 1.7–2.8 seconds | | | | |
| | MAX DELAY Setting | 3 multiples | 60–95 seconds | | | | |
| | | 6 multiples | 15–25 seconds | | | | |
| | | 10 multiples | 5.2–8.5 seconds | | | | |

NOTE 2: With TAP SELECTOR in the LOW position, FUNCTION switch must be in SET LO position to set the test current. With TAP SELECTOR in the High position, Function switch must be in SET HI position

NOTE 3: Repeated tests at high multiples are not recommended due to the thermal stress to the input stage components. Allow time for cool

**TABLE 5: TEST CURRENT FOR SHORT-TIME AND INSTANANEOUS PICKUP FUNCTIONS AND SHORT-TIME FUNCTION**

| LSS INST. or SHORT-TIME PICKUP Tap Settings | | 2 | 3 | 4 | 5 | 6 | 7 | 10 | 12 |
|---|---|---|---|---|---|---|---|---|---|
| LSS TAP SELECTOR Switch in Low Current Position | Pickup Current - Nominal | 69 ma | 108 ma | 146 ma | 191 ma | 225 ma | 267 ma | 380 ma | 470 ma |
| | Pickup Current Allowable Range (See Note 4) | 58 to 79 ma | 92 to 124 ma | 124 to 168 ma | 162 to 220 ma | 191 to 259 ma | 227 to 307 ma | 323 to 456 ma | 400 to 566 ma |
| | Test Current for SHORT-TIME Delay Test (See Note 5) | 104 ma | 162 ma | 220 ma | 287 ma | 337 ma | 402 ma | 570 ma | ---- |
| LSS TAP SELECTOR Switch in High Current Position | Pickup Current - Nominal | 156 ma | 238 ma | 319 ma | 400 ma | 488 ma | 560 ma | 820 ma | 990 ma |
| | Pickup Current Allowable Range (See Note 4) | 133 to 179 ma | 202 to 284 ma | 271 to 367 ma | 340 to 460 ma | 415 to 561 ma | 476 to 644 ma | 697 to 943 ma | 841 to 1138 ma |
| | Test Current for SHORT-TIME Delay Test (See Note 5) | 234 ma | 357 ma | 478 ma | 600 ma | 732 ma | 840 ma | ----- | ----- |
| Expected Time Delay For SHORT-TIME Delay Test | MIN DELAY | 0.08 to 0.17 seconds | | | | | | | |
| | INT DELAY | 0.20 to 0.32 seconds | | | | | | | |
| | MAX DELAY | 0.35 to 0.50 seconds | | | | | | | |

Note 4: Allowable range is based $\pm$ 15% tolerance around nominal value.

Note 5: The suggested test current shown is 1.5 multiples of pickup.

## TEST SHEET

Breaker Designation _____ Trip Unit Type _____
Breaker Serial Number _____ Trip Unit Serial Number _____
Trip unit AMPERE TAP switch setting _____ amperes.

**LONG-TIME FUNCTION**

PICKUP Tap Setting _____ DELAY Setting _____

PICKUP Test Current

| Allowable Range (from table 3) : | Test Value | Pass/Fail |
|---|---|---|
| Phase A _____ | _____ | _____ |
| Phase B _____ | _____ | _____ |
| Phase C _____ | _____ | _____ |

LONG-TIME DELAY

| Test Current | Allowable Delay (from table 4) | Test Value | Pass/Fail |
|---|---|---|---|
| _____ | _____ | _____ | _____ |

**INSTANTANEOUS FUNCTION**

PICKUP Tap Setting _____

PICKUP Test Current

| Allowable Range (from table 5) | Test Value | Pass/Fail |
|---|---|---|
| _____ | _____ | _____ |

**SHORT-TIME FUNCTION**

PICKUP Tap Setting _____ DELAY Setting _____

PICKUP Test Current

| Allowable Range (from table 5) | Test Value | Pass/Fail |
|---|---|---|
| _____ | _____ | _____ |

SHORT-TIME DELAY

| Test Current | Allowable Delay (from table 5) | Test Value | Pass/Fail |
|---|---|---|---|
| _____ | _____ | _____ | _____ |

**GROUND FAULT FUNCTION**

PICKUP Tap setting _____ DELAY Setting _____

PICKUP Test Current

| Allowable Range (from Table 6) | Test Value | Pass/Fail |
|---|---|---|
| _____ | _____ | _____ |

GROUND DELAY

| Test Current | Allowable Delay (from Table 6) | Test Value | Pass/Fail |
|---|---|---|---|
| _____ | _____ | _____ | _____ |

**TRANSIENT TEST**

Pass/Fail _____

**TABLE 7: TEST CURRENTS FOR GROUND PICKUP AND GROUND DELAY FUNCTIONS**

| CIRCUIT BREAKER FRAME SIZE | LSS GROUND PICKUP TAP SETTING | 1200 Amp | 1000 Amp | 900 Amp | 800 Amp | 600 Amp | 500 Amp | 300 Amp | 100 Amp |
|---|---|---|---|---|---|---|---|---|---|
| 200 AMP | Pickup Current (nominal) | 220 ma | ---- | ---- | ---- | 100 ma | ---- | 43 ma | 13 ma |
| | Pickup Current Allowable range (see note 6) | 187 to 253 ma | ---- | ---- | ---- | 85 to 115 ma | ---- | 36 to 50 ma | 11 to 15 ma |
| | Test Current for GROUND DELAY Test (see note 7) | 440 ma | ---- | ---- | ---- | 200 ma | ---- | 86 ma | 26 ma |
| 800 AMP | Pickup Current (nominal) | 218 ma | ---- | ---- | ---- | 98 ma | ---- | 43 ma | 11 ma |
| | Pickup Current Allowable Range (see note 6) | 185 to 251 ma | ---- ---- | ---- ---- | ---- ---- | 83 to 113 ma | ---- ---- | 36 to 50 ma | 9 to 13 ma |
| | Test Current for GOUND DELAY Test (see note 7) | 436 ma | ---- | ---- | ---- | 196 ma | ---- | 86 ma | 22 ma |
| 1600 AMP | Pickup Current (nominal) | 94 ma | ---- | 64 ma | ---- | 40 ma | ---- | 18 ma | ---- |
| | Pickup Current Allowable range (see note 6) | 80 to 108 ma | ---- | 54 to 74 ma | ---- | 34 to 46 ma | ---- | 15 to 21 ma | ---- |
| | Test Current for GROUND DELAY Test (see note 7) | 188 ma | ---- | 128ma | ---- | 80 ma | ---- | 36 ma | ---- |
| 2500 AMP | Pickup Current (nominal) | 58 ma | ---- | 41 ma | ---- | 25 ma | ---- | 10 ma | ---- |
| | Pickup Current for Allowable Range (see note 6) | 49 to 67 ma | ---- | 35 to 47 ma | ---- | 21 to 29 ma | ---- | 8 to 12 ma | ---- |
| | Test Current for GROUND DELAY Test (see note 7) | 116 ma | ---- | 82 ma | ---- | 50 ma | ---- | 20 ma | ---- |
| 3000/ 3200 AMP | Pickup Current (nominal) | 43 ma | 39 ma | ---- | 27 ma | ---- | 15 ma | ---- | ---- |
| | Pickup Current for Allowable Range (see note 6) | 36 to 50 ma | 33 to 45 ma | ----- | 23 to 31 ma | ---- | 13 to 17 ma | ----- | ----- |
| | Test Current for GROUND DELAY Test (see note 7) | 86 ma | 78 ma | ----- | 54 ma | ----- | 30 ma | ----- | ----- |
| 4000/ 4200 AMP | Pickup Current (nominal) | 31 ma | 24 ma | ----- | 19 ma | ----- | 10 ma | ----- | ----- |
| | Pickup Current for Allowable Range (see note 6) | 26 to 36 ma | 20 to 28 ma | ----- | 16 to 22 ma | ----- | 8 to 12 ma | ----- | ----- |
| | Test Current for GROUND DELAY (see note 7) | 62 ma | 48 ma | ----- | 38 ma | ----- | 20 ma | ----- | ----- |
| Expected Time Delay for GROUND DELAY Test | MIN DELAY | 0.05 to 0.17 seconds | | | | | | | |
| | INT DELAY | 0.18 to 0.32 seconds | | | | | | | |
| | MAX DELAY | 0.35 to 0.50 seconds | | | | | | | |

Note 6: Allowable range is based on ± 15% tolerance around nominal value.
Note 7: The test current shown is 2.0 multiples of pickup.

**Instantaneous Function - Pickup Test**

a) Check Table 5 for the expected value of current for the trip unit setting being tested. Note that the test current value is a function of the INST. pickup tap setting and the AMPERE TAP SETTING switch on the solid state trip unit. Move the SHORT–TIME, GROUND, and LONG–TIME tap pins to their TEST positions if necessary to prevent interference with the test of the INSTANTANEOUS function.
b) Place the METER switch in the most appropriate position for the expected value of test current; usually it will be LO.
c) Place the TRANSFORMER TEST switch in the OFF position. Place the POWER switch in the ON position.
d) Place the FUNCTION switch in the TEST Ø (test phase) position. Actuate the RESET switch once.
e) Actuate and hold the FAULT switch. Observe the AMMETER reading and increase the CURRENT ADJUST control until the unit trips. Release the FAULT switch. Compare the value of test current at the trip point to the expected value. DO NOT HOLD THE FAULT SWITCH DOWN FOR MORE THAN 5 SECONDS. WAIT 30 SECONDS BEFORE REPEATING THIS TEST.
f) Return CURRENT ADJUST to zero.

**Short Time Function - Pickup Test**

a) Check Table 5 for the expected value of current for the trip unit setting being tested. Note that the test current value is a function of the SHORT-TIME pickup tap setting and the AMPERE TAP SETTING switch on the solid state trip unit. Move the LONG TIME, GROUND, and INST. tap pins to their TEST positions if necessary to prevent interference with the test of the SHORT–TIME function.
b) Place the METER switch in the most appropriate position for the expected value of test current; usually this will be LO.
c) Place the TRANSFORMER TEST switch in the OFF position; the POWER switch in the ON position.
d) Place the FUNCTION switch in the TEST Ø (test phase) position. Actuate the RESET switch once.
e) Actuate and hold the FAULT switch. Observe the AMMETER reading and increase the CURRENT ADJUST control until the unit trips. Release the FAULT switch. Compare the value of test current at the trip point to the expected value. DO NOT HOLD THE FAULT SWITCH DOWN FOR MORE THAN 5 SECONDS. WAIT 30 SECONDS BEFORE REPEATING THIS TEST.
f) Return CURRENT ADJUST to zero.

**Short-Time Function - Time Delay Test**

a) Check Table 5 for the required value of test current and for the expected value of time delay for the SHORT-TIME settings being tested.
b) Place TIMER and METER switches in the most appropriate positions for these values; usually both will be LO.
c) TRANSFORMER TEST switch OFF; POWER switch ON.
d) Observe the position of the AMPERE TAP selector switch on the solid state trip unit. If it is in the higher of its two position, place the FUNCTION switch in its SET HI position; if in the lower position, place the FUNCTION switch in the SET LO position.
e) Actuate and release RESET switch.
f) Actuate and hold the FAULT switch. Increase the test current to the required value using the CURRENT ADJUST and observing the AMMETER.
g) Release the FAULT switch and place the FUNCTION switch in the TEST Ø position.
h) Actuate and hold the FAULT switch until the OPEN lamp lights and the TIMER stops.
i) Release the FAULT switch and return the CURRENT ADJUST to zero.
j) Observe the TIMER display and compare the test value to the expected value.

**Ground Fault Function - Pickup Test**

a) Check Table 6 for the expected value of current for the trip unit setting being tested. Move the LONG TIME, SHORT–TIME, and INST tap pins to their TEST positions if necessary to prevent interference with the test of the GROUND function.
b) Place the METER switch in the LO position.
c) Place the TRANSFORMER TEST switch in the OFF position, POWER switch in the ON position.
d) Place the FUNCTION switch in the TEST GND position. Actuate the RESET switch once.
e) Actuate and hold the FAULT switch. Observe the AMMETER reading and increase the CURRENT ADJUST control until the unit trips. Release the FAULT switch. Compare the value to test current at the trip point to the expected value. DO NOT HOLD THE FAULT SWITCH DOWN FOR MORE THAN 5 SECONDS. WAIT 30 SECONDS BEFORE REPEATING THIS TEST.
f) Return CURRENT ADJUST to zero.

**Ground Fault Function - Time Delay Test**

a) Check Table 6 for the required value of test current and the expected value of time delay.
b) Place TIMER and METER switches in the most appropriate positions for these values; usually both will be LO.
c) TRANSFORMER TEST switch OFF; POWER switch ON.
d) Place the GROUND PICKUP tap pin on the unit under test to its TEST position, so that the test current may be set without tripping the unit.
e) Place the FUNCTION switch in the TEST GND position. Actuate the RESET switch once.
f) Actuate and hold the FAULT switch. Using the CURRENT ADJUST control, increase the test current to the required value. Release the FAULT switch. DO NOT TAKE MORE THAN 5 SECONDS TO SET TEST CURRENT.
g) Return the GROUND PICKUP tap pin to its correct setting.
h) Actuate and hold the FAULT switch until the OPEN lamp lights and the TIMER stops.
i) Release the FAULT switch and return the CURRENT ADJUST to zero.
j) Observe the TIMER display and compare the test value to the expected value.

**Transient Test**

The purpose of this test is to confirm that the solid state trip unit has sufficient transient immunity to withstand transients without incorrect tripping.

a) Place all tap pins in their original locations.
b) Place METER switch in LO position; TRANSFORMER switch off; POWER switch on.
c) Place the FUNCTION switch in the TEST Ø position.
d) Actuate and hold the FAULT switch. Observe the AMMETER; using the CURRENT ADJUST set 20 milliamperes.
e) Continue to hold the FAULT switch and actuate the TRANSIENT TEST switch. A trip operation should not occur.
f) If the trip unit includes a GROUND FAULT function, place the FUNCTION switch in TEST GND postion.
g) Actuate and hold the FAULT switch. Observe the AMMETER and adjust the test current to 5 milliamperes.
h) Continue to hold the FAULT switch and actuate the TRANSIENT TEST switch. A trip operation should not occur.

**Magnetic Latch Trip Test**

The purpose of this test is to confirm the operation of the magnetic latch by directly tripping it with the test set.

a) Close the power circuit breaker.
b) Place METER switch in HI position; TRANSFORMER SWITCH off; POWER switch on.
c) Place the FUNCTION switch in the ØA PU position; ML switch in the TEST position; CURRENT ADJUST at zero. Operate RESET switch once.
d) Actuate and hold the FAULT switch. Observe the AMMETER and increase the test current slowly until the power circuit breaker trips. The test current at the trip point should be 0.75 amperes or less.
e) Return CURRENT ADJUST to zero; ML switch to TRIP or NT position.

**WARNING WARNING WARNING WARNING**

AT THE CONCLUSION OF TESTING YOU MUST:

1. RESTORE ALL TAP PINS ON THE SOLID STATE TRIP UNIT TO THEIR CORRECT POSITIONS SO THAT PROPER PROTECTION AND COORDINATION IS MAINTAINED. TAP PINS MUST NOT BE LEFT IN A TEST POSITION.
2. RESET TARGETS ON TRIP UNITS.
3. REPLACE TRANSPARENT COVER ON SOLID STATE TRIP UNIT.
4. REMOVE TEST CABLES.
5. REMATE BREAKER HARNESS CONNECTOR TO CONNECTOR ON THE SOLID STATE TRIP UNIT. SECURE WITH RETAINING CLIP.

## PRIMARY CURRENT TESTING

The primary test method is desirable periodically, when the proper high current test equipment is available, since all elements of the circuit breaker are tested at one time, simulating actual service conditions as closely as possible.

NOTE: When a low voltage - high current test set is used, the resultant test current is not perfectly sinusoidal. This can cause apparent errors in test results, particularly when checking the GROUND function, since solid-state trip devices are designed and tested in factory in terms of rms sinusoidal current, in accordance with standards.

However, even with the deficiencies noted, the primary test method is still valuable in checking all components in the circuit breaker from terminal to terminal.

The following guide lines are provided for informaton.

1. Test Equipment - The test equipment should be a 60 Hz. power supply capable of supplying single phase, high current at low voltage. Current output should be

adjustable with a minimum current requirement of 600% of maximum sensor rating. This is based on checking the instantaneous element for pickup at approximately four times rating and checking the short-time delay element set at four times rating with current at 1½ times the setting. The test equipment should be capable of maintaining the instantaneous and short-time test currents for minimum of two seconds which is the time allotted for adjusting the test equipment to the correct current values. The equipment should contain a timer which will operate during current flow and be capable of accurately measuring times between .05 and 300 seconds.

2. Connect the upper and lower breaker terminals of one pole to the test unit. If the breaker and test unit are not equipped with stab adapters, use cable or bus of sufficient size and as short as possible to hold heat rise and voltage drop to a minimum.
3. After each test that results in the breaker tripping, reclosing the breaker is required before proceeding with the next test.
4. Since much of the testing is done with currents exceeding the continuous current rating of the circuit breaker, care should be exercised in not overheating it. Allow sufficient cooling time between tests.
5. After conclusion of the tests, make sure the tap plugs are reset to the required operating setting.
6. In order to save time and to keep the breaker from overheating, the tests are made at one setting. From experience, if the solid-state trip device checks out at one calibration setting with an overcurrent through the breaker, the device will also check out at other calibration settings and overcurrents. Therefore, 300% overcurrent is used as representative for long-time delay and 150% (of SHORT-TIME calibration setting) for short-time delay testing.
7. Due to extensive equipment required, field testing for resettable delay is not justified and, therefore, not covered by this procedure.
8. Clean Contacts - The arc contacts will become marked from repeated tests and at the low voltage test values, the current tends to mark the mains as well. Clean with non-metallic material such as "Scotch-Brite". Blow residue from the breaker before placing in service.

**Note for Testing Models Equippped With Ground**

For LSS models so equipped, the ground trip function must be defeated in order to test the other functions. For primary current testing, ground function defeat must be accomplished by using a special cable, part number 611786-T1. This cable is inserted temporarily in the circuit between the trip unit and the breaker wiring harness. (NOTE: Placing the GROUND tap pin in its TEST position is not sufficient to properly defeat GROUND when performing primary current testing).

As an example of tnis test procedure, consider a LK-16 breaker equipped with type LSS-5G solid state trip device.

The settings are:

| | | |
|---|---|---|
| Ampere Tap: | | 1600 amps |
| Long-Time: | | |
| Pickup | – | 1600 amps (1.0 x 1600) |
| Delay | – | Min Band |
| Short-Time: | | |
| Pickup | – | 6400 amps (4 x 1600) |
| Delay | – | Int. Band |
| Instananeous: | | |
| Pickup | – | 16,000 amps (10 x 1600) |
| Ground: | | |
| Pickup | – | 300 amps |
| Delay | – | Max. Band |

Before testing the LONG-TIME, SHORT-TIME, and INSTANTANEOUS functions, you must defeat GROUND. To defeat the ground function, remove the connector from the top of the trip unit, and plug it into the male connector of test cable 611786-T1. Then plug the female connector of the test cable into the trip unit. BE SURE ALL CONNECTORS ARE PROPERLY MATED BEFORE APPLYING TEST CURRENT.

For the long time test, use test current of 3 x 1600 = 4800 amps. Since this is below the short-time and instantaneous settings, they need not be changed for the test. The breaker should open after the expiration of the long-time minimum delay of 8 to 12 seconds.

To test short time function, use a test current of 1.5 x 6,400 = 9,600 amps. The delay should be from 0.20 to 0.32 seconds.

Use the test current of 1.5 x 16,000 = 22,000 amps to test the instantaneous. Delay should be less than 0.05 seconds plus the delay error of the test set timer.

In addition to the timing tests, the pickup currents may also be checked, if desired. The tolerance on long-time pickup is -0% to +20%. For short-time and instantaneous pickups the tolerance is ±10%. The short-time and instantaneous pickups may be measured by increasing the current until the breaker trips. REPEATED TESTS AT HIGH MULTIPLES ARE NOT RECOMMENDED DUE TO THE THERMAL STRESS TO THE INPUT STAGE COMPONENTS. ALLOW TIME FOR COOLING BETWEEN TESTS.

Long-time pickup may be determined by connecting a high impedance VOM to the pin jacks in the special test cable. As the test current is increased, the voltmeter will suddenly increase its reading from zero voltages to approxi-

mately 0.5 volts. This is the pickup point. Do not leave the VOM connected when making time delay tests as it may affect the accuracy of the timing circuits. For our example, pickup should occur between 1600 and 1920 amperes.

Before testing the GROUND function, remove the special test cable, reconnect the breaker wiring harness connector to the trip unit. Be sure the connector is properly mated and secured with the retaining clip. For our example, the ground pickup tap pin is in the 300 amp. position. Use a test current of 2.0 x 300 = 600 amps. to test GROUND. The delay should be between 0.35 and 0.50 seconds with the delay set at MAX. Ground pickup may be tested by increasing the current gradually from a low level until the breaker trips. The tolerance on ground pickup is ±10%.

### Primary Testing of a Four-Wire Double-Ended Substation (DE4W) Breaker

Main and tie breakers of a 4-wire double ended system sense ground faults from currents through the neutral sensor only. A ground fault current can be simulated using a spare neutral sensor around the current source bus.

This neutral sensor is connected to the trip unit by means of a special test cable, part number 611786-T2. This test cable is inserted temporarily in the circuit between the trip unit and the breaker wiring harness. The secondary of the neutral sensor being used for testing is then connected to the two free wires on the test cable. CAUTION: DO NOT APPLY TEST CURRENT UNTIL THE SECONDARY IS CONNECTED TO THE TEST CABLE AND ALL CONNECTORS ARE PROPERLY MATED.

Upon completion of tests, remove the special test cable from the circuit and reconnect the breaker wiring harness to the trip unit. Be sure the connector is properly seated and secured with the retaining clip.

**WARNING WARNING WARNING WARNING**

**AT THE CONCLUSION OF TESTING YOU MUST:**

1. RESTORE ALL TAP PINS ON THE SOLID STATE TRIP UNIT TO THEIR CORRECT POSITIONS SO THAT PROPER PROTECTION AND COORDINATION IS MAINTAINED. TAP PINS MUST NOT BE LEFT IN A TEST POSITION.
2. RESET TARGETS ON TRIP UNITS.
3. REPLACE TRANSPARENT COVER ON SOLID STATE TRIP UNIT.
4. REMOVE TEST CABLES.
5. REMATE BREAKER HARNESS CONNECTOR TO CONNECTOR ON THE SOLID STATE TRIP UNIT. SECURE WITH RETAINING CLIP.

## MAINTENANCE

### 1. Renewal Parts

Should an LSS trip unit or 505 test set not function properly, we recommend that the unit be returned to the factory for repair. Immediate replacement of an LSS trip unit can be made available from the factory. Order through your nearest Sales Office. State the MFG. NO. from the nameplate sticker on the front planel of the LSS unit. The inoperative trip unit can then be repaired and retained as a spare.

Certain parts, such as the test cables, can be ordered for the 505 test set. Contact your nearest District Office.

### 2. Test Set Calibration Testing

If desired the test set may be returned to the factory for re-certification of calibration accuracy. Contact the nearest District Office.