Technical Manual

NAVY TYPE ACB

600 FRAME SIZE

AIR CIRCUIT BREAKER

WESTINGHOUSE TYPE DBN-40S

NAVY CONTRACT NObs-3247

WESTINGHOUSE REFERENCES

SWGR. GENERAL ORDER NH-50472-Y
SWGR. SHOP ORDER 31-Y-9532
I.B. S.O. 21-Y-2019

WESTINGHOUSE TECHNICAL MANUAL 35-224-C9

BUREAU OF SHIPS • NAVY DEPARTMENT • FEBRUARY, 195

INDEX

AIR CIRCUIT BREAKER
Navy Type ACB (Westinghouse Type DBN-40S)
600 Frame Size
(Special Interrupting Rating - See Page 3)

Description	Page
SECTION A - INTRODUCTION	1
List of Illustrations	1
Circuit Breaker Dimension Plan	1
SECTION B - GENERAL INFORMATION	3
B-1. Manually Operated Circuit Breaker	3
B-2. Electrically Operated Circuit Breaker	3
SECTION C - OPERATION AND MAINTENANCE	5
C-1. Caution	5
C-2. Wiring Diagrams	5
C-3. Shunt Tripping	5
C-4. Electric Closing	5
C-5. Maintenance	5
SECTION D - COMPONENTS AND ATTACHMENTS	6
D-1. General Assembly (Manually Operated Circuit Breaker)	6
D-2. General Assembly (Electrically Operated Circuit Breaker)	6
D-3. Arc Chutes	6
D-4. Contact Assembly	6
D-5. Mechanism	8
D-6. Anti-Shock-Close Device	11
D-7. Electric Lockout Device	11
D-8. Closing Magnet (Electrically Operated Circuit Breaker)	13
D-9. Closing Relay (Electrically Operated Circuit Breaker)	16
D-10. Anti-Shock-Open Device	18
D-11. Series Overcurrent Trip Device	19
D-12. Auxiliary Switch	20
D-13. Shunt Trip Device	22
D-14. Reverse Current Trip Device	22
D-15. Repair Parts	26

35-224-C5

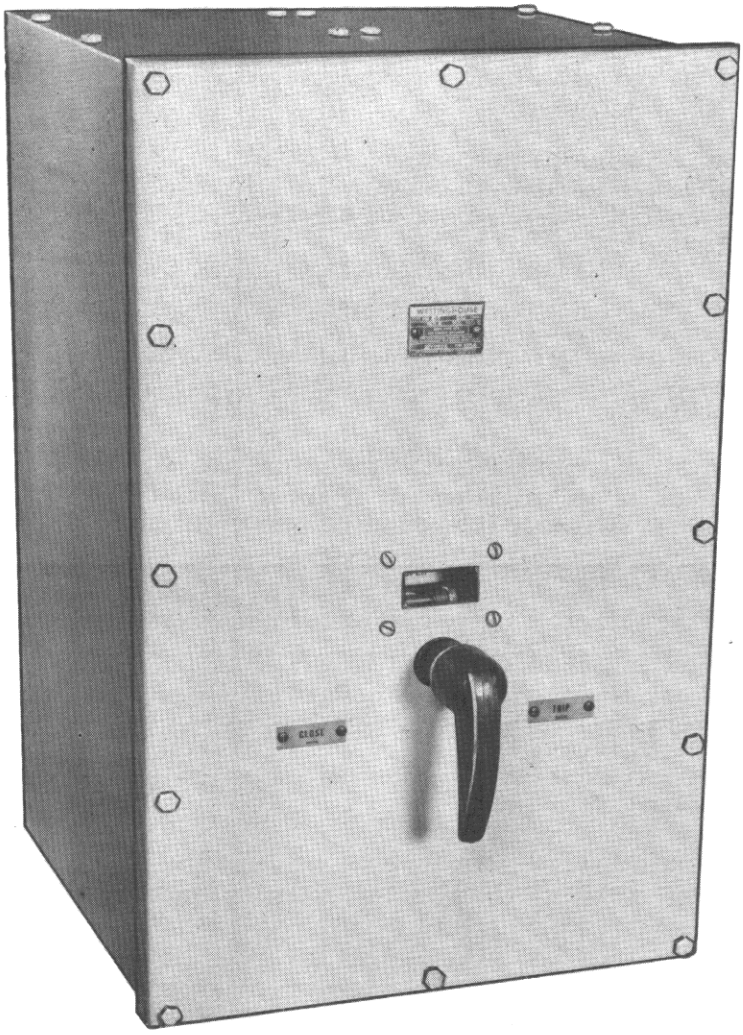

35-224-C5

NAVY TYPE ACB AIR CIRCUIT BREAKER
Westinghouse Type DBN-40S

SECTION A—INTRODUCTION

A-1. LIST OF ILLUSTRATIONS

Fig. No.	Westinghouse Ref. Dwg.	Title	Page
Photo	343988	Frontispiece	ii
1	32-B-5808	Outline Dimensions	2
2	46-A-8536	General Assembly	4
3	18-C-7218	Wiring Diagrams	5
4	38-A-9840	Arc Chute and Contact Assembly	7
5	47-A-1580	Mechanism	9
6	22-B-1624	Anti-Shock-Close Device	12
7	32-B-5807	Electric Lockout Device	14
8	31-A-2610	Closing Magnet	15
9	46-A-8539	Closing Relay	17
10	22-B-1622	Anti-Shock-Open Device	19
11	47-A-1579	Series Overcurrent Trip Device	21
12	32-A-6819	Auxiliary Switch	23
13	22-B-1625	Shunt Trip Device	24
14	31-A-2614	Reverse Current Trip Device	25
15	29-B-6881	Certification Data (Motor-Generator Breaker)	27
16	29-B-6882	Certification Data (Auxiliary-Power Breaker)	30
17	32-B-5801	Certification Data (Diesel-Generator Breaker)	32

A-2. CIRCUIT BREAKER DIMENSION PLAN

Figure 1 gives the outline dimensions for the Navy type ACB 600 frame size air circuit breaker, Westinghouse Corporation Type DBN-40S direct current breaker in enclosure.

35.224.C9

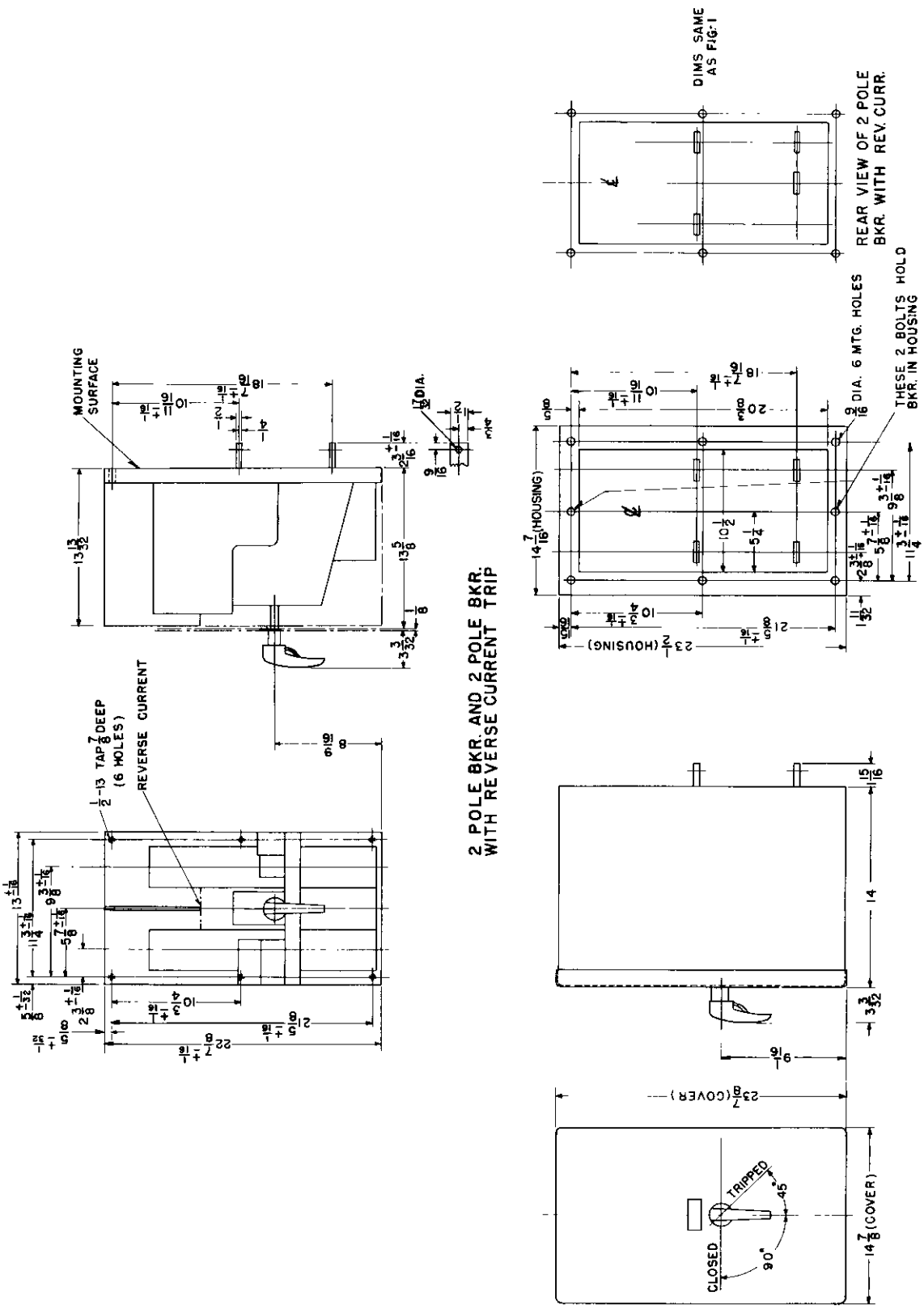

FIG. 1 — Outline Dimensions

35-224-C5

SECTION B—GENERAL INFORMATION

B-1. MANUALLY OPERATED CIRCUIT BREAKER

The DBN-40S air circuit breaker is a sturdy, compact piece of shipboard electrical equipment consisting of a rigid steel chassis to which are bolted the several sub-assemblies which make up the complete circuit breaker. For example, the mechanism, pole units, arc chutes, overcurrent trip devices and other attachments are each complete within themselves and are readily interchangeable between breakers. They may be removed intact and replaced if necessary with minimum outage time.

The DBN-40S is a type ACB air circuit breaker of 600 frame size. Its interrupting and continuous current ratings are as outlined in the following table:

INTERRUPTING RATING

355 VOLTS D-C
100,000 AMPERES*

*Non-inductive circuit as demonstrated in test at New York Naval Laboratories under Project 5258-18.

CONTINUOUS CURRENT RATING

Circuit Breaker Copper Rating Amperes	Overcurrent Trip Coil Rating Amperes
	640
1200	900
	1200

The chassis of the air circuit breaker consists of a rigid steel panel (150) Fig. 2 on the front of which is bolted a supporting frame consisting of a bracket (151) which in turn supports shelf (152). A separate pole unit (100) is bolted to the steel panel for each pole. The base of each pole unit is molded from insulating material. When supplied, the series overcurrent trip devices (400) are bolted to the lower part of the pole unit base. The moving contact assembly is pivoted at its lower end on the pole unit base and is connected to the lower stud either directly or through a series overcurrent trip device. The stationary contact assembly is connected directly to the upper stud. The moving contact assembly opens and closes the electric circuit by moving out and in from the stationary contact assembly. An arc chute is mounted above and surrounding each pair of contacts. Its purpose is to stretch and cool the arc drawn when the contacts separate so that it may be readily extinguished.

The operating mechanism (200) is located on the breaker shelf (152) and transmits the force for closing the breaker from the operating handle (166) to the cross bar (168) and thence to the moving contact assembly through insulating links. The mechanism then latches and holds the contacts in the closed position. The circuit breaker is closed manually by releasing latch (224) operating handle (166) and then turning the operating handle (166) 90° clockwise and it may be tripped manually by turning the handle 45° in the opposite direction. Automatic tripping is accomplished by one of the automatic devices which lift the trip bar when suitably energized. These devices consist of the shunt trip (500) and the series overcurrent trip (400) and the reverse current trip (600) any or all of which may be supplied with an individual circuit breaker. One or more auxiliary switches (550) and a terminal block are supplied depending on the number of control and auxiliary circuits to be controlled by the operation of the circuit breaker.

The main power circuit through the circuit breaker consists of the lower stud, series overcurrent trip coil (if supplied), shunt, moving contact assembly, stationary contact, and upper stud, all connected in series in the order named.

MOUNTING

DBN-40S circuit breakers are supplied in individual enclosures, see Fig. 1.

B-2. ELECTRICALLY OPERATED CIRCUIT BREAKER

The electrically operated circuit breaker is basically the same equipment described in Section B-1 with the exception that it is equipped with a closing magnet (340), a closing relay (300), and a shunt trip coil. These three attachments plus a source of closing power and a control switch enable an operator to close the circuit breaker from a remote point.

It should be noted that the addition of a closing magnet for electrical operation does not in any way change the manual operation features of the circuit breaker.

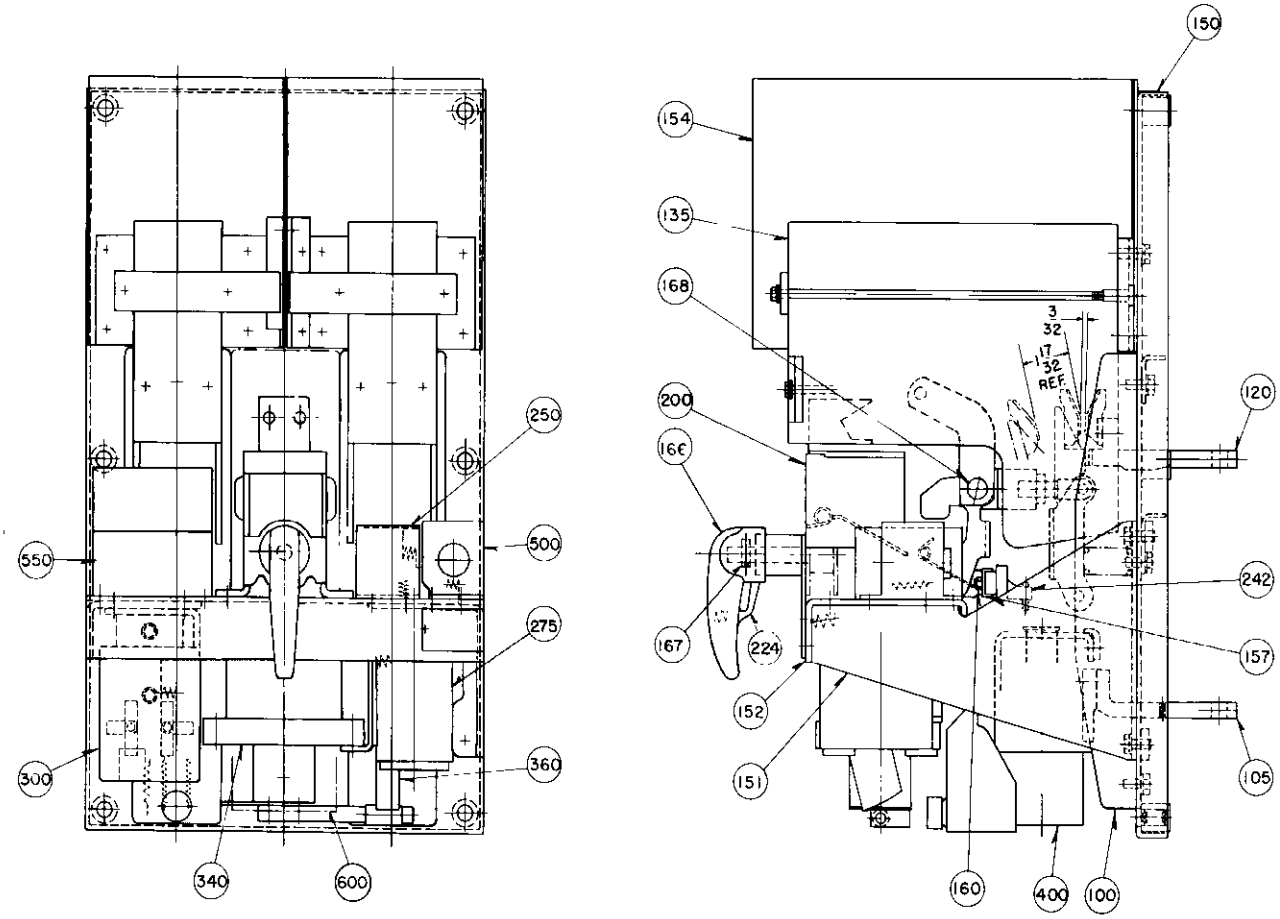

100	MOLDED BASE
105	LOWER STUD
120	UPPER STUD
135	ARC CHUTE
150	STEEL PANEL
151	BRACKET
152	SHELF
154	BARRIER
157	TRIP BAR
160	ELASTIC STOP NUT
166	OPERATING HANDLE
167	5/16-24 SET SCREW
168	CROSS BAR
200	MECHANISM
242	TRIP FINGER
250	ANTI-SHOCK-OPEN DEVICE
275	ELECTRIC LOCKOUT
224	LATCH-HANDLE
300	CLOSING RELAY
340	CLOSING MAGNET
360	ANTI-SHOCK-CLOSE DEVICE
400	OVERCURRENT TRIP
500	SHUNT TRIP DEVICE
550	AUXILIARY SWITCH
600	REVERSE CURRENT TRIP

FIG. 2 — General Assembly

35-224-C5

SECTION C—OPERATION AND MAINTENANCE

C-1. CAUTION

Before working on a circuit breaker, the load and control circuits feeding it must be de-energized. The breaker should be in the "OPEN" position, but it should be noted that all circuit breaker studs are not necessarily "dead" when the circuit breaker is open.

Before putting the circuit breaker in regular operation it should be closed and tripped manually several times to see whether all parts are in proper alignment and move freely. Particular care should be taken to make sure the studs have not been forced out of alignment by the bus work. Lift the trip bar by hand with the circuit breaker open to make sure that it does not bind.

C-2. WIRING DIAGRAMS

Reference Figure 3

Figure 3 shows the typical control wiring for a DBN-40S breaker. For complete details refer to applicable diagram in the Switchboard Instruction Book.

C-3. SHUNT TRIPPING

Shunt trip coils have a nominal voltage of 250 volts and a voltage range of 140 to 355 volts.

C-4. ELECTRIC CLOSING

Closing coils and relay coils have a nominal voltage of 250 volts d-c and a voltage range of 200 to 355 volts.

C-5. MAINTENANCE

The frequency of inspection for maintenance will depend upon local conditions but, in general, a complete inspection for preventive maintenance should be made at least once a year. It is recommended that a special inspection be given any breaker that has opened a heavy short-circuit current.

If excessive heating not caused by overcurrent is observed, look for loose or corroded contacts or connections.

When inspecting the circuit breaker, examine the contact surfaces. Rough or high spots should be removed with a clean file or sandpaper. Do not use emery cloth since the dust from this material is a good conductor of electricity and is sure to cause trouble if allowed to settle on insulating surfaces.

More detailed maintenance instructions are given later on in the sections on the individual attachments.

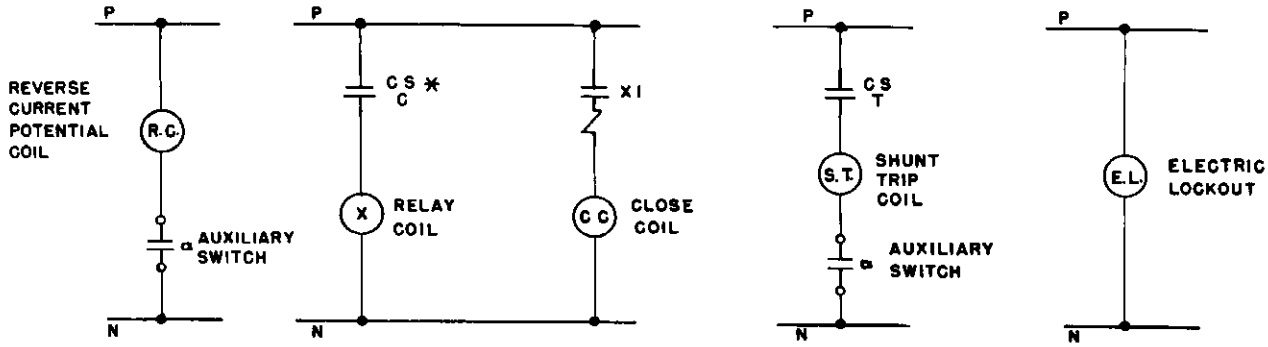

FIG. 3 — Wiring Diagrams

35-224-C5

SECTION D—COMPONENTS AND ATTACHMENTS

D-1. GENERAL ASSEMBLY (MANUALLY OPERATED BREAKER)

The DBN-40S air circuit breaker is provided with two series overcurrent trip devices. Both poles are identical, each being provided with a stationary and moving contact assembly and an arc chute.

A center base with a reverse current trip may be supplied and connected in series with the right hand pole unit.

D-2. GENERAL ASSEMBLY (ELECTRICALLY OPERATED CIRCUIT BREAKER)

The general assembly of the electrically operated breaker is similar to that of the manually operated breaker. The addition of a closing magnet and closing relay makes the breaker electrically operated. In addition to this, the anti-shock-close device is arranged to act on the moving core of the closing magnet rather than directly on the mechanism as in the case of manually operated breakers.

D-3. ARC CHUTES

Reference Figure 4

FUNCTION

The arc chute (135) mounted above and surrounding the contact assembly of each pole, has the function of stretching and cooling the arc drawn by the separating contacts so that it may be quickly extinguished and the circuit opened in the least possible time. The arc chutes are an extremely important part of the circuit breaker and the breaker should never be energized without their being mounted in place.

DESCRIPTION

Each arc chute consists of a number of metal plates (138) and (139) and asbestos plates (140) supported in a laminated case (135) and held in place by a clamping plate (136) and insulating tube spacers (146) and two screws (147) through the insulating spacers to the molded base (100). When the arc is drawn by the separating contacts, it moves up into the chute by magnetic and thermal action where it is quickly de-ionized and extinguished thus opening the circuit.

D-4. CONTACT ASSEMBLY

Reference Figure 4

FUNCTION

The contact assembly closes and opens the electric circuit through the circuit breaker. The upper stud (120), the stationary contact (121) the series overcurrent trip device (400) (when supplied) and the lower stud (105) are stationary and are mounted rigidly on the molded base (100). The moving contact assembly is hinged on the molded base by pin (127) and is moved in and out by molded insulating link (116) which is pivoted on cross bar (168) Figure 2.

The moving contact assembly is closed and held in the closed position against the force of the accelerating spring (131) by the insulating link (116). When the force exerted by the insulating link is released by tripping the breaker, the accelerating spring quickly moves the moving contact assembly to the open position. When the breaker interrupts high short circuit currents, magnetic forces play a large part in the rapid opening of the contacts.

With the circuit breaker in the closed position, main contact surfaces (109) and (121) are held together and carry the load current. When the circuit breaker is tripped, arcing contact surfaces (119) and (123) snap together an instant before main contact surfaces (109) and (121) separate and then the moving contact assembly moves away, drawing the arc between the arcing contacts. This arrangement minimizes arc damage to main current carrying contacts. When the circuit breaker is closed the arcing contact surfaces touch first and then separate as the main contacts touch and the closing operation is completed.

DESCRIPTION

The stationary contact assembly consists of the main contact extruded integral with the upper stud (120) and the arcing contact (123) fastened to the extruded copper section by two screws (124). Contact surfaces (121) and (123) are special arc-resisting silver alloy inserts.

The moving contact assembly consists of a contact base (110) of copper to which is fas-

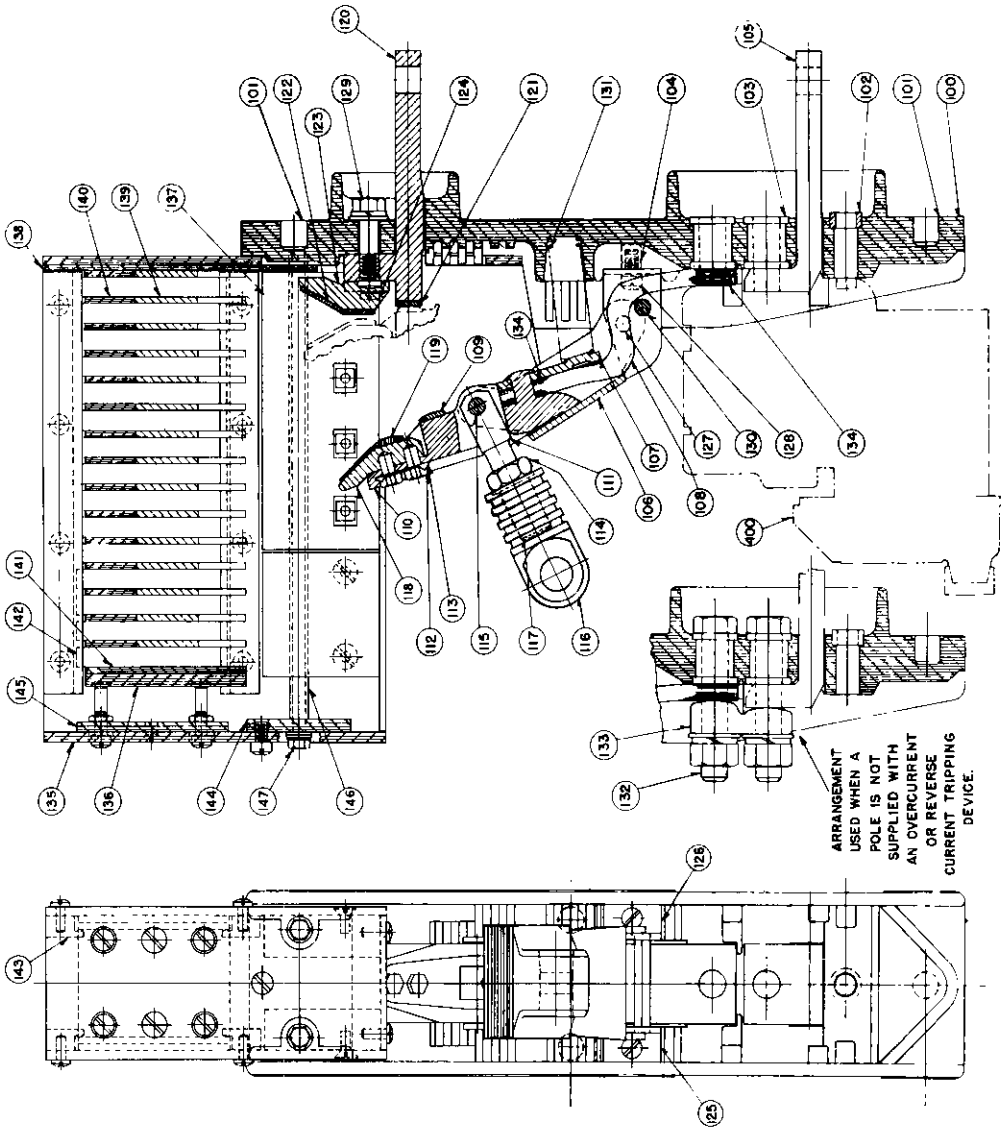

	100	MOLDED BASE
	101	INSERT
	102	INSERT
	103	INSERT
	104	INSERT
	105	LOWER STUD
	106	CONTACT LINK
	107	ARMATURE
	108	SHUNT
	109	MAIN MOVING CONTACT TIP
	110	CONTACT BASE
	111	LINK
	112	¼-20 X ⅜ HEX. STL. BOLT
	113	LOCKING CLIP
	114	½-20 BRS. LOCKNUT
	115	PIN
	116	MOLDED LINK
	117	INSERT
*	118	CONTACT, MOVING ARCING
	119	MOVING ARCING CONTACT TIP
	120	UPPER STUD
	121	STATIONARY CONTACT TIP
	122	STATIONARY ARCING CONTACT TIP
	123	CONTACT, STATIONARY ARCING
*	124	.190-32 X ⅝ PAN STL. SEMS MACH. SCR.
	125	BRACKET
	126	BRACKET
	127	PIN
	128	¼-20 X ½ FIL. STL. MACH. SCR.
	129	⅝-16 X 1¼ HEX. SI. BRZ. BOLT
	130	PIN
*	131	SPRING, ACCELERATING
	132	BOLT
	133	CONNECTOR
	134	SOLDER
	135	ARC CHUTE
	136	CLAMPING PLATE
	137	SHIELD
	138	PLATE
	139	PLATE
	140	PLATE
	141	PLATE
	142	SPACER
	143	GUIDE
	144	PLATE
	145	CLAMPING PLATE
	146	TUBE SPACER
	147	¼-20 X 1 HEX. STL. BOLT
	400	OVERCURRENT TRIP

*REPAIR PARTS

Fig. 4 — Arc Chute and Contact Assembly

35-224-C5

tened arcing contact (118) by two bolts (112) which are locked with locking clips (113). Main and arcing contact surfaces (109) and (119) are silver alloy inserts welded to their respective bases. Contact base (110) is riveted and soldered to shunt (108) which is bolted at its lower end either to a connector (133) when a series overcurrent trip device is not supplied, or to an overcurrent tripping device. The shunt (108) is a flexible bundle of thin copper strips that carries current from the moving contact assembly to the lower stud. Contact base (110) is connected to contact link (106) with pin (115) and has a limited freedom of rotation about this pin. Contact link (106) is hinged by pin (127) to bracket (125) fastened to molded base (100) by two screws (128). Pin (130) mounted in bracket (125) has the function of restraining shunt (108) when the circuit breaker is tripped.

The moving contact assembly is attached to the mechanism cross bar (168) Figure 2 by molded insulating link (116) which is screwed on metal link (111) and locked by nut (114). When the breaker is tripped all force is removed from the cross bar and accelerating spring (131) quickly snaps the moving contact assembly from the closed to the open position.

ADJUSTMENTS

The correct contact pressure of the DBN-40 is about 50 pounds. This pressure is obtained when the arcing contact surfaces are 3/32 inch apart when the breaker is closed. This gap may be adjusted after removing arc chute (135) by removing two screws (147) and cross bar (168). Loosen locknut (114) and turn insulating link counterclockwise if the gap is too small and clockwise if the gap is too large. The lockout should be retightened and the cross bar and arc chutes replaced.

REPLACEMENTS

To replace moving arcing contact (118):

(a) Remove arc chute (135) by means of screws (147).

(b) Bend down locking clips (113) and remove bolts (112). When replacing bolts be sure to relock them by bending up corners of clips.

To replace stationary arcing contact (123):

(a) Remove arc chute (135) by removing screws (147).

(b) Removing screws (124) frees the contact.

To replace contact arm accelerating spring (131):

(a) Remove arc chute (135) by removing screws (147).

(b) End of spring may be slipped off projection on contact arm and replaced.

D-5. MECHANISM

Reference Figure 5

FUNCTION

The operating mechanism opens and closes the circuit breaker contacts by moving the cross bar (168) Figure 2 to which the moving contact assemblies are attached by insulating links. The breaker is closed manually by turning the operating handle quickly and smoothly as far as it will go (90°) in a clockwise direction. The breaker may be tripped manually by turning the handle 45° in a counterclockwise direction.* The breaker is tripped automatically by one of the automatic devices described later which rotate trip lever (220) about pin (224).

The mechanism is "trip free", that is, it is not possible to close the breaker if one of the automatic tripping devices moves the trip bar up during the closing stroke or if the trip bar is held in the raised position.

DESCRIPTION

The operating mechanism consists of a group of toggle links, and a latch attached to the operating mechanism frame on fixed pins (214), (226), (241), (216), and (224). The cross bar (168) is held by the closing lever (207). Rotating the operating handle clockwise moves the mechanism linkage from the open position shown in Figure 5 to the closed position shown. This is accomplished when the roller (236) on the end of the operating handle shaft (232) forces the first toggle link (203) upward pushing second toggle link (204), third toggle link (206) and closing lever (207) ahead of it. The motion of the toggle linkages is directed by link (205) which is pivoted at its lower end on pin (217) in latch (208). Latch (208) in turn is restrained from moving by roller latch (210) which is pivoted on pin (214) and engages trigger (221) on trip lever (220). The linkage is held in the closed

* Handle Latch (224) must be held while closing or tripping.

200	MECH. FRAME
201	BEARING
202	LATCH STUD PIN
203	FIRST TOGGLE LINK
204	SECOND TOGGLE LINK
205	LINK
206	THIRD TOGGLE LINK
207	CLOSING LEVER
208	LATCH
209	PAWL
210	ROLLER LATCH
211	ROLLER
212	PIN
213	SPACER
214	PIN
* 215	SPRING, L. H. PAWL
216	PIN
217	PIN
218	PIN
219	PIN
220	TRIP LEVER
221	TRIGGER
222	SPRING PLATE STOP
* 223	SPRING, ROLLER LATCH
224	LATCH, HANDLE
* 225	SPRING, RETRIEVE
226	PIN
227	PIN
228	INDICATOR LINK
229	PIN
230	INDICATOR
231	SPRING, HANDLE LATCH
232	SHAFT
* 233	SPRING, HANDLE RETURN
* 234	SPRING, TRIP
* 235	LEVER
236	ROLLER
237	NEEDLE BEARING
238	PIN
* 239	SPRING, ANTI-BOUNCE RETURN
* 240	SPRING, R.H. PAWL
241	PIN
242	TRIP FINGER
243	SCREW
244	5/16-24 SET SCREW
245	ANTI-BOUNCE LATCH

* REPAIR PARTS

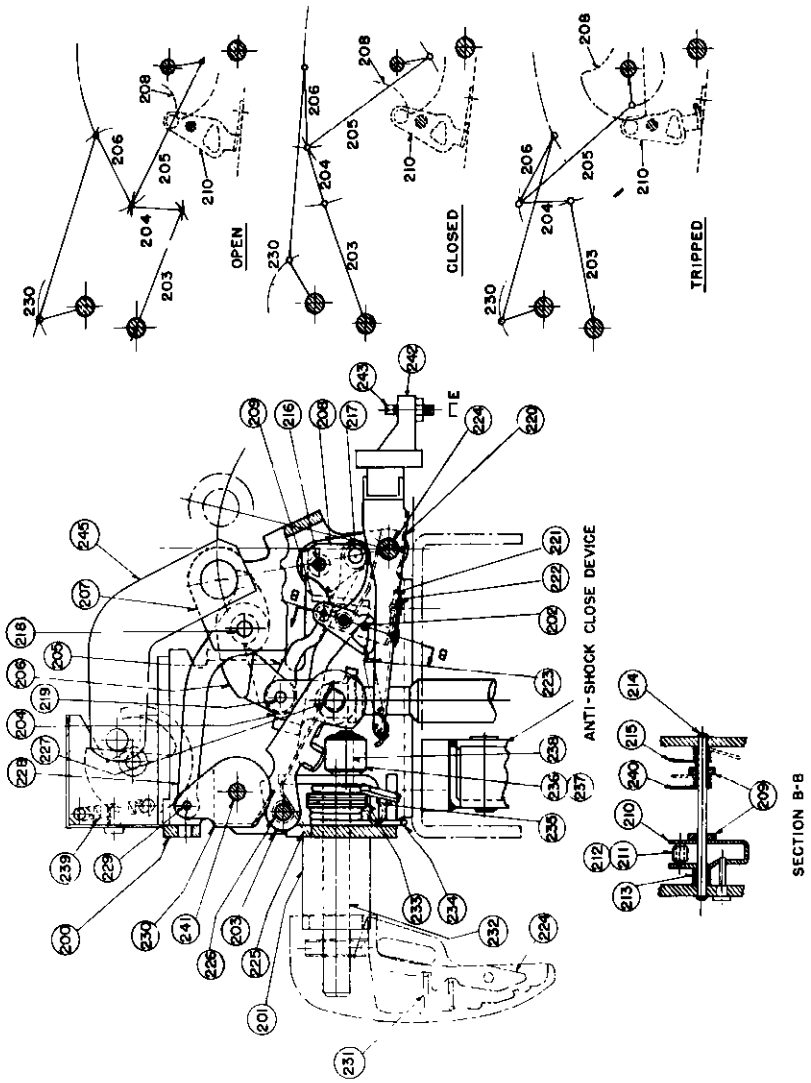

FIG. 5 — Mechanism

35-224-C5

position by pawl (209) which latches under pin (227). The handle shaft and lever are returned to the normal position after closing by handle return spring (233).

The mechanism is opened by rotating trip lever (220) counterclockwise. This is accomplished either by rotating handle counterclockwise, in which case the handle shaft lever strikes the extreme left end of trip lever (220) to move it downward; or by forcing push rod "E" of the tripping attachments to strike trip finger screw (243). In either case the counterclockwise rotation of the trip lever (220) moves trigger (221) out of engagement with the lower end of the roller latch (210), which in turn permits the roller latch to rotate counterclockwise out of engagement with latch (208). Latch (208) is then free to rotate in response to the pull of the latch link (205) so that the mechanism assumes the trip free position shown in Figure 5 in which the contacts are open but part of the mechanism levers are in the closed position. In this position pawl (209) is disengaged from pin (227) by a lug on link (204) which pushes it up permitting the linkage to collapse to the open position shown in Figure 4.

Trip spring (234) returns operating handle to the normal vertical position after manual tripping.

ANTI-BOUNCE LATCH

The anti-bounce latch (245) prevents the closing lever (207) from bouncing off its stops and re-closing the circuit when the circuit breaker interrupts maximum short circuit currents. When the circuit breaker interrupts these high currents, the top of the closing lever knocks the latch up, causing the latch to engage the closing lever should it tend to return to the closed position. The latch is mounted on top of the mechanism frame.

POSITION INDICATOR

Position indicator (230) is formed from sheet metal and is pivoted on pin (241). It is visible from the front of the circuit breaker through a window in the faceplate and mechanism frame. See Figure 2. With the circuit breaker in the open position shown in Figure 5, the yellow face of the indicator shows through the window. The word "OPEN" is stamped on this yellow face. When the breaker closes, pin (218) of the closing lever (207) pulls indicator link (228) to the right, thus rotating the other face of the indicator up into a position visible through the window. This face is painted blue and is stamped with the word "CLOSED".

REPLACEMENTS

To replace roller latch spring (223):

(a) Prepare to remove mechanism by removing anti-shock-open device (250), terminal block (169) and auxiliary switch (550) all of Figure 2. Avoid removing any more wires than necessary. It will usually be possible to push the devices aside without removing the wiring. Tag any wires which may have to be removed.

(b) Rotate handle (166) clockwise until pin (277) is visible through a hole in the right side of the mechanism frame. Using a small rod as a pusher, shove this pin part way through the hole until the rod of the anti-shock-close device, in the case of manually operated circuit breakers, or the operating rod of the closing magnet, in the case of electrically operated circuit breakers drops off. Return the pin (227) to its proper location and allow linkages to fall open. This frees mechanism from anti-shock-close device or the closing magnet as the case may be.

(c) Remove handle (166), faceplate (155) and cross' bar (168) of Figure 2.

(d) Remove the four bolts which hold mechanism to the shelf (152) Figure 2. This frees mechanism from shelf but frees also either anti-shock-close device (360) of manually operated breakers or closing magnet (340) of electrically operated breakers.

These devices should be temporarily replaced while repairs are being made to the mechanism.

(e) Removal of pin (224) enables trip lever (220) to be removed and spring (223) may then be replaced.

To replace pawl springs (215) and (240):

(a) Repeat (a) to (e) above.

(b) Remove pin (214) far enough to release pawl (209). Roller latch (210) and hold-in which are pivoted on the same pin will then remain in place. Replace springs (215) and (240), making sure that their ends are supported correctly as indicated in Figure 5.

To replace trip spring (234) or handle return spring (233):

(a) Repeat operations (a) through (e) under replacement of roller latch spring.

(b) Remove pin (214) and drop pawl (209) and roller latch (210) out of frame.

(c) Remove snap ring from handle shaft (232) and push the handle shaft back into frame. Spring (233) or (234) may then be replaced.

To replace retrieve spring (225):

(a) Repeat operations (a) through (e) under "Replacement of Roller Latch Spring".

(b) Remove cover (239).

(c) Remove pins (241) and (226). Retrieve spring (225) may then be replaced.

When replacing mechanism springs, particular attention should be given to the mechanism drawing Figure 5 to see that spring ends are properly placed and that torsion springs are properly oriented to exert torque in the proper direction.

D-6. ANTI-SHOCK-CLOSE DEVICE

Reference Figure 6

FUNCTION

This device serves to prevent the circuit breaker contacts from closing from shock when open. This is accomplished by an arrangement whereby a mechanical escapement device or "ticker" is operated by the closing of the breaker. Shock blows tending to close the breaker are of such short duration that the mechanical escapement device does not have time to operate and the device effectively locks the open circuit breaker in the open position under shock conditions.

DESCRIPTION

The anti-shock-close device consists of a ticker case (360) Figure 6 which contains the ticker assembly, bolted to the platform by two bolts (379). A rod and cam pusher assembly (363) is connected at its upper end to pin (227) Fig. 5 of the mechanism. Whenever circuit breaker is closed, rod (363) is pulled up by pin (227) and cam (361) is caused to rotate in a clockwise direction around pin (370) against the torsion of return spring (369). As the cam rotates in this manner, oscillator wheel (362) is caused to rotate clockwise around pin (372) by pin (369) mounted in cam (361). The rotation of wheel (362) is regulated by mechanical oscillator (364) which is pivoted on pin (365). This oscillator oscillates due to the engagement of its teeth with the teeth of oscillator wheel (362). When the circuit breaker is tripped, rod (363) drops unimpeded and return spring (369) returns cam and consequently oscillator wheel to the "breaker open" position shown in the figure.

Shock blows tending to close the circuit breaker would have to act in such a way as to raise rod (363). These blows are of such short duration that the cam is restrained long enough by the oscillator wheel and oscillator to prevent closing of the circuit breaker.

REPLACEMENTS

To replace return spring (369):

(a) Remove handle (166) and faceplate (155) Figure 2.

(b) Remove guide pieces (374) and (375) by removing bolt (376).

(c) Remove bolts (379) and remove case (360) from shelf.

(d) Removing snap rings (367), (371) and (373) will allow corresponding pins to be removed. The various parts are then free to be removed and the spring may be replaced.

(e) After reassembly, be sure that the cam operates freely and that it returns freely to its starting position when pushed over.

D-7. ELECTRIC LOCKOUT (DIESEL GENERATOR BREAKER)

Reference Figure 7

FUNCTION

This device will prevent the circuit breaker from being closed unless its coil (711) is energized. It does this by holding up the trip bar and thus holding the circuit breaker in the "trip free" position.

DESCRIPTION

The device is bolted to the underside of the circuit breaker platform under the shunt trip device.

It consists of a coil (711), a stationary core (708), a moving core (709), a frame (701), and a system of linkages to the trip bar and cross bar.

When coil (711) is de-energized, moving core (709) drops down and lever (703) rotates

35-224-C5

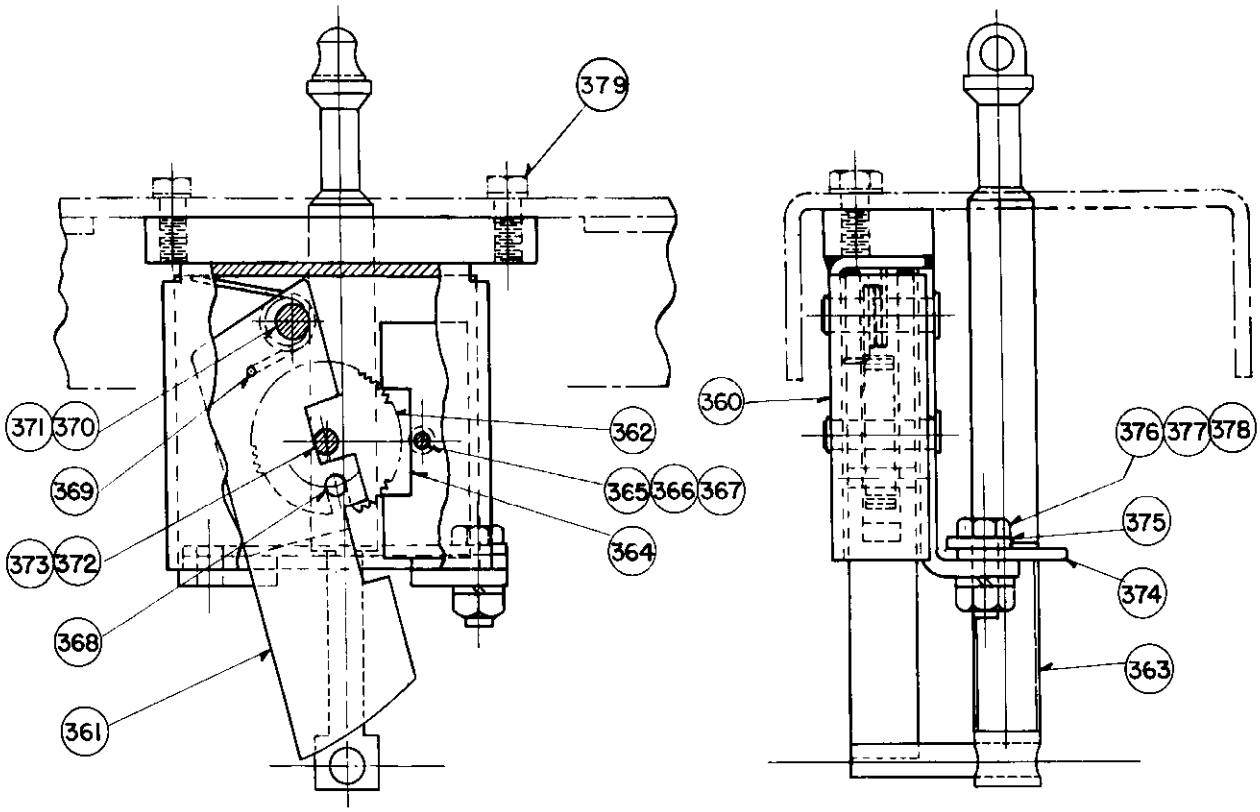

360	CASE	
361	CAM	
362	WHEEL	
363	ROD AND CAM PUSHER	
364	OSCILLATOR	
365	PIN	
366	.190 STD. BRS. WASHER	
367	SNAP RING	
368	PIN	
* 369	SPRING, RESET	

*REPAIR PARTS

370	PIN
371	SNAP RING
372	PIN
373	SNAP RING
374	GUIDE
375	GUIDE
376	5/16-18X 7/8 HEX. STL. BOLT
377	5/16-18 HEX. MACH. SCR. NUT
378	5/16 STL. LOCKWASHER
379	BOLT

FIG. 6 — Anti-Shock-Close Device

35-224-C5

counterclockwise around pin (705) in response to pull of operating spring (704). This counterclockwise rotation of lever (703) pulls up locking lever (702) through pin (706) which in turn lifts trip bar (157).

When coil (711) is energized, moving core (709) moves up in response to the magnetic attraction between it and stationary core (708) pushing with it plunger rod (710) which turns lever (703) clockwise against the tension of spring (704). This rotation allows locking lever to drop and allows trip bar to reset.

When the circuit breaker is closed, cross bar link (715) is moved by the cross bar to such a position that the electric lockout is inoperative. In other words, with the breaker closed locking lever (702) is held down regardless of whether or not the coil (711) is energized.

REPLACEMENTS

Coil (711) or spring (704) may be easily replaced after removing the device from the circuit breaker platform.

D-8. CLOSING MAGNET (ELECTRICALLY OPERATED CIRCUIT BREAKER)

Reference Figure 8

FUNCTION

The closing magnet is the device used to close the circuit breaker electrically and is mounted directly below the mechanism and under the shelf of the circuit breaker. It is secured to the shelf with the same four bolts that hold the mechanism in place.

Together with a control switch, a source of power, and the closing relay, the closing magnet enables an operator to close the circuit breaker from a remote point.

DESCRIPTION

The closing magnet Figure 8 consists of an iron frame or yoke which is securely bolted to the circuit breaker shelf, a plunger or moving core (348), an operating rod (346), a stationary core (355), and a coil (350).

The operating rod (346) connects the moving core (348) to pin (227) Figure 5 of the mechanism. It will be observed that an upward movement of this pin will cause the mechanism to close and latch the circuit breaker.

When coil (350) is energized by contact of relay (see Figure 3) the moving core (348) moves upward in response to the magnetic attraction between stationary and moving cores across air gap "A". About one-tenth of a second is required for the solenoid to close and latch the circuit breaker. When the moving core moves into the "breaker closed" or "closed gap" position, trip bracket (353) trips the relay mechanically, and its contacts open, thus deenergizing the closing magnet. The closing coil is momentarily rated and serious damage will result if potential is allowed to remain on its terminals through improper adjustment of trip stud (327) of the relay Figure 9 so that the relay does not trip and interrupt close coil circuits. When the moving core and operating arm have pushed the mechanism linkages to the closed and latched position, pin (227) holds the moving core in the "closed gap position".

When the mechanism is tripped pin (227) falls allowing operating arm and moving core to fall with it.

REPLACEMENTS

To replace closing coil (350):

(a) Remove handle (166) and faceplate (155) Figure 2.

(b) Remove trip bracket (353) and cam pusher by removing bolts (352).

(c) Remove anti-shock-close device from side of closing magnet by removing bolt (354) and bolts (345). This frees punchings (344).

(d) Disconnect closing coil leads from terminal of terminal block and terminal of closing relay.

(e) Coil may then be worked out of yoke and replaced.

ANTI-SHOCK-CLOSE DEVICE

On electrically operated circuit breakers, the anti-shock-close device (354) is bolted to the side of the closing magnet. Arm (374) bolted to the bottom of moving core (348) operates cam (361) of the device. Otherwise the operation is identical with that described in Section D-6.

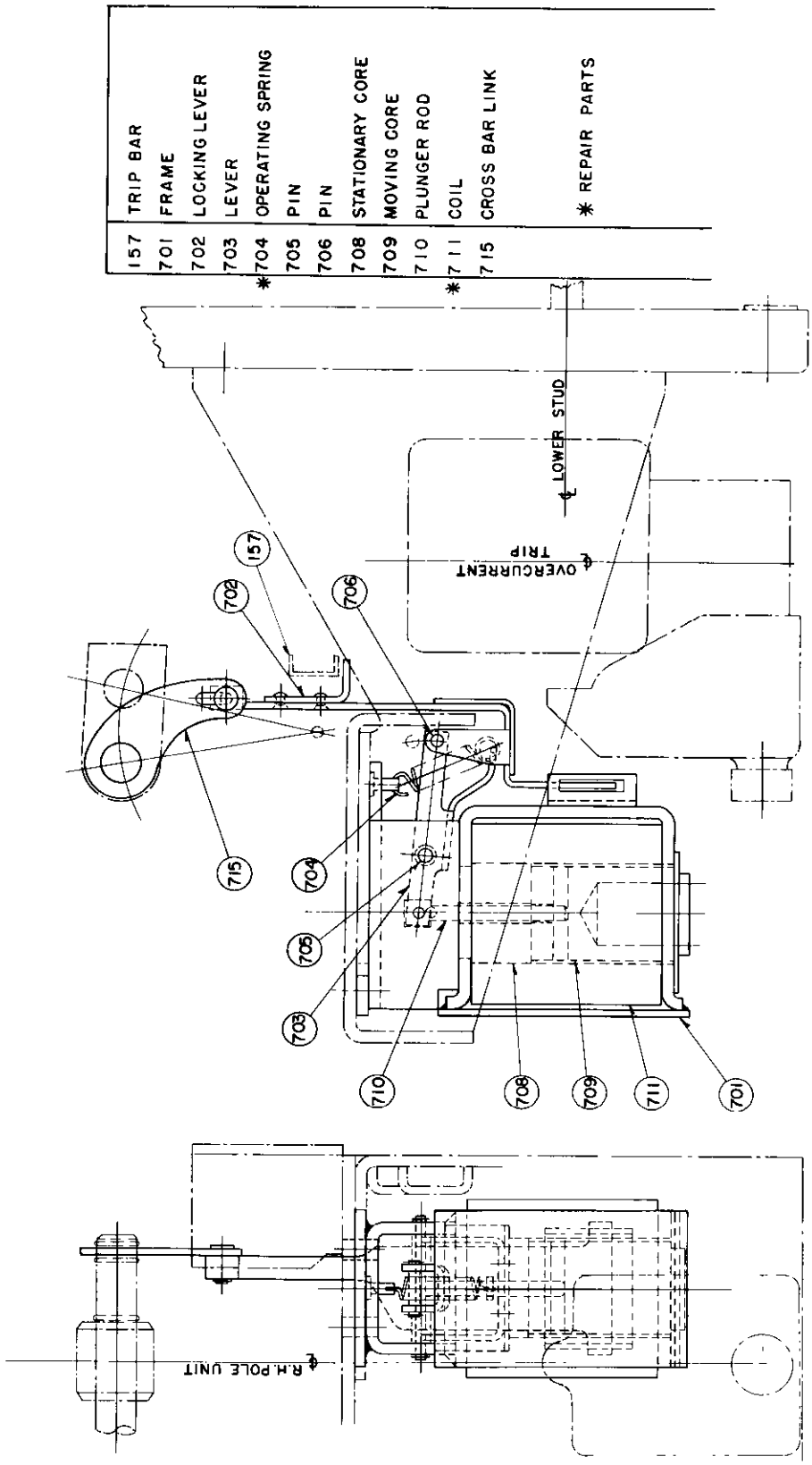

FIG. 7 — Electric Lockout Device

35-224-C5

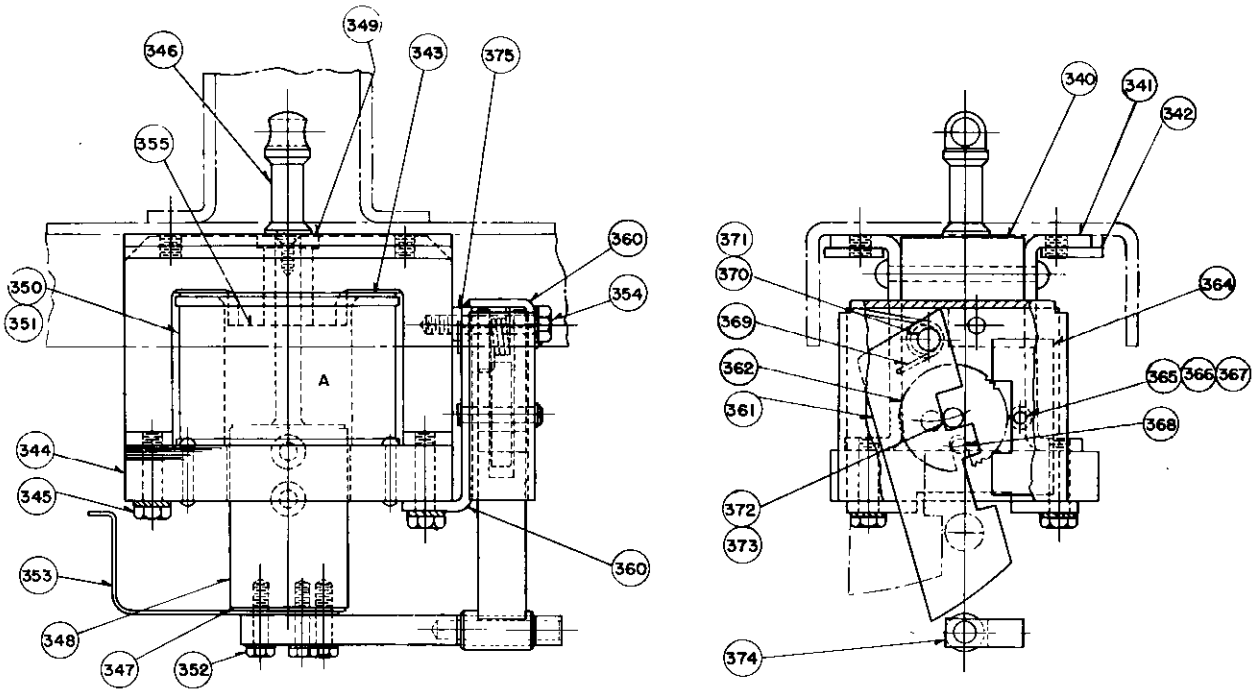

	340	CLOSING MAGNET
	341	SIDE PLATE
	342	PAD
	343	PACKING WASHER
	344	PUNCHINGS
	345	BOLT
	346	ROD
	347	PUNCHINGS
	348	MOVING CORE
	349	STOP
*	350	COIL
	351	SPOOL
	352	BOLT
	353	TRIP BRACKET
	354	BOLT
	355	STATIONARY CORE

	360	ANTI-SHOCK-CLOSE DEVICE
	361	CAM
	362	WHEEL
	364	OSCILLATOR
	365	PIN
	366	.190 STD. BRS. WASHER
	367	SNAP RING
	368	PIN
*	369	SPRING
	370	PIN
	371	SNAP RING
	372	PIN
	373	SNAP RING
	374	ARM
	375	PAD

FIG. 8 — Closing Magnet

35-224-C5

D-9. THE CLOSING COIL CONTACTOR (ELECTRICALLY OPERATED CIRCUIT BREAKER)

Reference Figure 9

FUNCTION

The closing relay is used on electrically operated circuit breakers only and is mounted on the underside of the breaker shelf to the left of the closing magnet. The relay has the function of closing and opening the closing coil circuit in electrical operation. Together with the shunt trip, the relay enables the operator to control the circuit breaker electrically from a remote point by means of control switches. The operating coil of the DBN-40S closing relay has a momentary rating.

DETAILED DESCRIPTION

The relay base (300) is molded from insulating material. Contact assemblies, coil assembly, and other parts are attached to the base. Frame (305) serves as part of the magnetic circuit of coil (338) and also serves to hold the coil in place. This frame or yoke is fastened to the molded base by three screws (318). The coil (338) is wound on a molded spool (339) and is held in place by guide tube (337) which extends from the top of the molded base through the bottom of the frame (305) and through the center of the spool.

The moving core (333) is free to slide up and down in the guide tube (337). In moving up in response to the magnetic pull from the stationary core when the coil is energized by closing switch CSC, Figure 3, the moving core pulls up latch (336) which is fastened with pin (335). When the coil (338) is energized, spring (334) bearing against latch (336) holds latch in such a position that it is hooked under latch pin (316) thus causing moving contact arm assembly (301) to rotate counterclockwise around contact arm pin (329), thereby compressing spring (314). The moving contact (303) is thus pulled against the stationary contact (304) completing the circuit. In Figure 9 the moving core is shown in the upper or "contacts closed" position.

As soon as the contacts close, current starts flowing through the closing coil of the circuit breaker. The moving core (348) of the closing magnet, Figure 8, moves up, closing the circuit breaker. Trip bracket (353) fastened to moving core moves up with it and strikes trip stud (327) of the relay. The trip screw is fastened to release bracket (308) which is caused to rotate counterclockwise around pin (317) against the torque exerted by torsion spring (313). When release bracket (308) is rotated in this manner, it strikes the bottom of latch (336) rotating it counterclockwise around pin (335) against the force of spring (334). This rotation of latch (336) causes it to become disengaged from latch pin (316) and consequently spring (314) extends causing moving contact assembly (301) to rotate clockwise thereby snapping moving contacts (303) away from stationary contacts (304) and interrupting the circuits.

The moving contact (303) is resiliently mounted by means of spring (312) around stud set into the moving contact arm (301) and is secured by elastic stop nut (315). This causes a slight rolling and wiping action on the spherically shaped contact surfaces as they meet which helps to insure a positive electrical connection.

An arc chamber (310) molded from arc resisting material surrounds the left hand contacts. It is held in place by means of the two iron plates of the blowout magnet assembly (310) which in turn is fastened to the molded base (300) by means of screw (323). The blowout magnet coil is connected in series with the contacts and consequently flux is flowing through the magnetic circuit and the air gap of the blowout magnet assembly at the time the contacts part and draw an arc. The magnetic circuit is so arranged that its air gap is across the arc chamber and the arc. The arc is forced by magnetic action down into the arc chamber where it goes out due to the stretching and cooling process. The right hand contact is not used.

ADJUSTMENT

The relay trip out sequence should be checked as follows:

(a) Remove cover (309) from relay and disconnect closing coil lead from relay.

(b) Energize relay coil (momentary rated coil may be safely energized for 3 or 4 minutes). Close breaker slowly manually and observe relative position of cross bar (168) Figure 2 when trip bracket (353) Figure 8 releases relay contacts. The release position should occur just before the breaker latches closed; but within the last 1/64 inch travel of the cross bar. Bend trip bracket (353) if required to obtain above adjustment. With breaker closed, relay coil should be de-energized and energized several times to make sure relay contacts will not close.

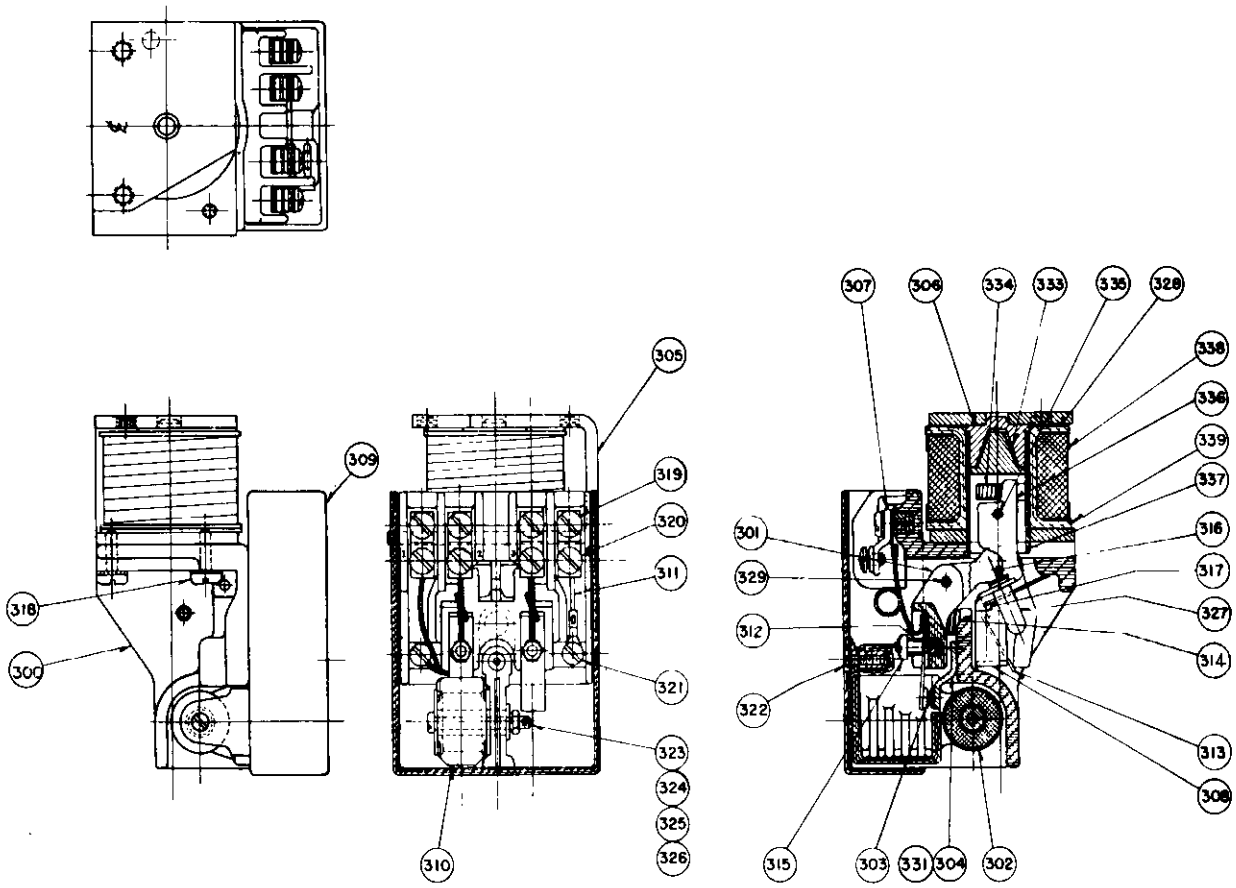

	300	RELAY BASE	321	.164-32X3/8 PAN HD.SCR.
	301	MOVING CONT. ARM ASSY.	322	.164-32X3/4 PAN HD.SCR.
*	302	BLOWOUT MAGNET ASSY.	323	.190-32X1 3/8 PAN HD.SCR.
*	303	MOVING CONT. ASSY.	324	.190 STD. WASHER
*	304	STAT. CONT. ASSY. R.H.	325	.190 STD.LOCKWASHER
	305	FRAME	326	.190-32 NUT
	306	STAT. CORE	327	TRIP STUD
	307	TERMINAL BRACKET	328	SPRING WASHER
	308	RELEASE BRACKET	329	CONTACT ARM PIN
	309	COVER		
	310	ARC CHAMBER	* 331	STAT. CONT ASSY. L.H.
	311	TERM. CONN.		
*	312	SPRING, CONTACT	333	MOVING CORE
*	313	SPRING, TRIP	* 334	SPRING, LATCH
*	314	SPRING, CONTACT ARM	335	PIN
	315	ELASTIC STOP NUT	336	LATCH
	316	LATCH PIN	337	GUIDE TUBE
	317	RELEASE BRKT PIN	* 338	OPERATING COIL
	318	1/4-20X5/8 SCREW	339	MOLDED SPOOL
	319	.190-32X3/8 SCREW		
	320	.190X1/4 BINDING HD.SCR.		
				* REPAIR PARTS

FIG. 9 — Closing Relay

35-224-C5

(c) Reconnect close coil and close breaker electrically. With breaker closed, relay coil should be de-energized and energized several times to make sure the relay contacts will make.

REPLACEMENT OF SPARE PARTS

DANGER!

Before working on the relay, make sure that the circuit breaker is open and that the upper and lower studs are "dead". Make sure that control circuits are "dead". Realize that contorl wiring may be "hot" even though the main circuit breaker studs are "dead".

Before replacing parts of the relay, it is best to disconnect the wiring and remove it from the circuit breaker:

(a) Remove screw (322) and lift off molded cover (309) of the relay thus exposing the terminals.

(b) Remove and tag the wires from the terminals by loosening screws (320).

(c) One or more lead from the relay coil may be connected to the terminal block. Remove front cover of the terminal block and disconnect leads.

(d) Remove the two screws through the circuit breaker shelf (152) Figure 2 which hold the relay to the shelf.

The relay is now free from the circuit breaker.

To replace relay coil:

(a) Remove three screws holding coil frame (305) to molded base (300) and remove from base.

(b) Pull out guide tube (337) allowing stationary core to drop out. Coil is now free to be replaced.

To replace latch spring (334):

(a) Remove frame (305) as before.

(b) Lift out moving core assembly (333).

(c) Rotate latch clockwise as far as it will go.

Spring will drop out. Replace.

To replace trip spring (313):

(a) Remove release bracket pin (317).

(b) Replace pin and new spring.

To replace moving contact arm assembly spring (314):

(a) Remove contact arm pin.

(b) This releases moving contact arm assembly (303) and spring (314) may then be replaced.

To replace moving contact (303) or contact spring (312):

(a) Remove elastic stop nut (315) and replace spring (if necessary).

(b) If the moving contact is to be replaced, disconnect its lead from under the terminal screw (319) and remove and replace.

To replace blowout magnet assembly:

(a) Remove leads of blowout coil.

(b) Remove screw (323) and replace blowout magnet assembly.

To replace stationary contact assembly:

(a) Remove blowout magnet assembly as outlined above.

(b) Remove the screw (321) and replace contact.

D-10. ANTI-SHOCK-OPEN DEVICE

Reference Figure 10

FUNCTION

This device prevents tripping of the circuit breaker due to rotation of the trip lever caused by shock but allows normal rotation of the trip lever by tripping devices.

DESCRIPTION

The bracket (250) is mounted on the supporting frame shelf to the immediate right of the operating mechanism frame (200) Figure 1 and is held to the shelf by two bolts (256). Lever (252) is pivoted on pin (253) as is plate (254). Lever and plate are connected by bolt and elastic stop nut (265) in such a way that if the trip bar raises, lever (252) rotates counterclockwise around pin (253) and plate (254) is caused to rotate in the same direction. Con-

versely, if plate (254) is restrained from rotating, trip bar is held down by lever (252). Under shock conditions, plate (254) is restrained from moving in the following manner:

Studs (255) and (258) are suspended on pin (251) and plate (254) is fitted with a slot in its end arranged so that the plate will slide down and allow the circuit breaker to trip under normal tripping impulses. Under shock conditions, however, the two outboard studs are caused to rotate around pin (251) due to the off center weights (257), thus jamming the plate (254) from sliding down. The middle stud is actuated by a separately pivoted weight (267) which rotates about pin (264). Spring (262) serves to hold weight in position shown during normal operation.

REPLACEMENTS

To replace plate spring (263):

(a) Remove cover by removing screws (266).

(b) Remove device from shelf by removing two screws (256).

(c) Remove right hand snap ring from pin (253) and withdraw pin (253) far enough to free spring (263).

ADJUSTMENT

With the breaker closed any motion of trip bar (157) should cause plate (254) to move down. Pushing trip bar down about 1/16 inch should cause 1/32 inch or less upward motion of slotted end of plate (254). Adjustment should be made with breaker open by turning nut (265).

D-11. SERIES OVERCURRENT TRIP DEVICE

Reference Figure 11

FUNCTION

This device provides for selective protection of the various portions of the electrical system under two distinct conditions of current: First, for low overcurrent values, it will trip the breaker after a SHORT TIME DELAY; and second, for still higher values of overcurrent it will trip the circuit breaker instantaneously.

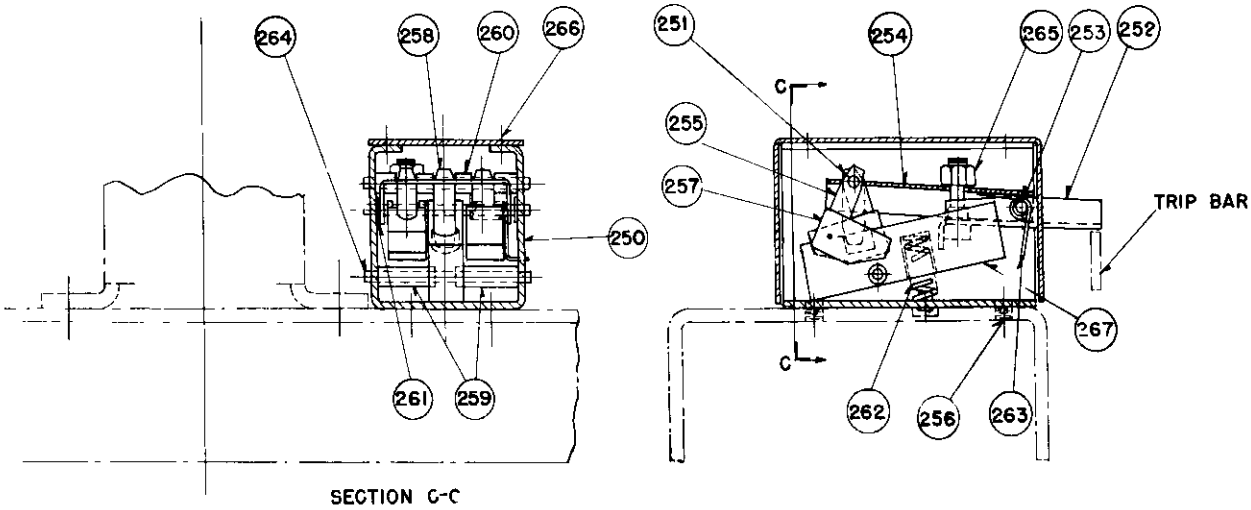

250	ANTI-SHOCK OPEN BRACKET
251	PIN
252	LEVER
253	PIN
254	PLATE
255	STUD
256	SCREW
257	WEIGHT
258	STUD

259	SPACER
260	SPACER
261	WASHER
*262	SPRING WEIGHT
*263	SPRING PLATE
264	PIN
265	1/4-20 ELASTIC STOP NUT
266	J64-32 X 1/4 FIL.HD.STL.MACH.SCR.
267	WEIGHT

FIG. 10 — Anti-Shock-Open Device

35-224-C5

DESCRIPTION

The device is actuated by an electromagnet connected in series with the moving contact assembly and the lower stud of the circuit breaker.

The SHORT TIME DELAY pickup calibration is set at the factory at the ampere setting marked on the nameplate. The operating time consists of three different time settings: minimum, intermediate and maximum time. If an overcurrent occurs of greater magnitude than the short time delay pickup setting, the circuit breaker will trip subject to a short time delay as determined by a gear escapement mechanism.

At currents above the instantaneous setting, the circuit breaker trips without any intentional time delay. The pickup setting is made at the factory at some ampere value from 5 to 30 times the series overcurrent trip coil rating and is not readily adjustable in the field. The maximum setting shall not exceed 18,000 amperes.

If during the short time delay period the current drops to 100% of rated overcurrent trip coil current, the series overcurrent trip device will reset and the breaker will not trip provided the overcurrent has not persisted beyond the time indicated by the lower edge of the band curve for the particular breaker involved.

SHORT TIME DELAY

The tube (423) consists of an upper nonmagnetic tube and a lower core (424) of magnetic material.

With an overcurrent in excess of pickup, the magnetic force between lower core (424), and yoke ring (475) will cause the tube to rise and trip the breaker restrained only by the mechanical escapement device.

The pin (472) in lower core is attached to a mechanical escapement device enclosed in housing (458). This device consists of a lever (459) pivoted on a fixed pin (463) and connected through instantaneous spring (420) to gear segment (460) which operates pinion (474) and oscillator wheel (461) which is on the same shaft. Oscillator wheel (461) is impeded from free rotation by oscillator (462).

INSTANTANEOUS TRIP

With fault currents of sufficient magnitude to extend instantaneous spring (420), the operation is identical with the above except that the upward motion of the tube is not restrained by oscillator (462) due to the extension of instantaneous spring (420).

REPLACEMENTS

To replace calibration springs (410):

(a) Remove two bolts (451) and (478) from back of panel and remove trip device.

(b) Remove insulation cover (484) by removing screws (495). Calibration springs (410) are now accessible for replacement.

To replace instantaneous spring (420):

(a) Repeat (a) and (b) above.

(b) Remove housing (458) from yoke (457) by removing four screws (476).

(c) Spring (420) may be replaced by loosening adjusting screw (469). Arm (456) must be pin pricked near the screw after replacement for locking purposes.

D-12. AUXILIARY SWITCH

Reference Figure 12

FUNCTION

The auxiliary switch is used to close or open auxiliary or control circuits. The closed or open positions of its sets of contacts are coordinated with the closed or open position of the main circuit breaker contacts.

DESCRIPTION

The four pole type RC auxiliary switch is mounted on the top of the supporting frame shelf to the left of the operating mechanism. It is operated by shaft (555) and arm (557) which connects to the breaker lever of the operating mechanism. An eight pole auxiliary switch consists of two four pole switches, one mounted above the other.

The contacts are designed to carry 15 amperes continuously or 250 amperes for three seconds.

The auxiliary switch is a shaft-operated, four pole, rotary type having "a" and "b" contacts. An "a" contact is one that is open when the circuit breaker is open, and a "b" contact is one that is closed when the circuit breaker is open.

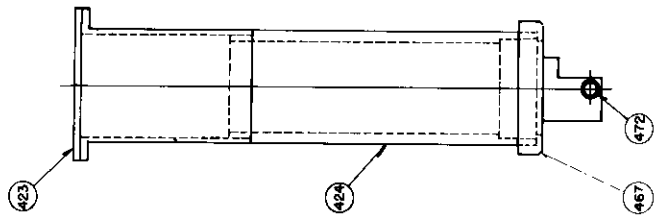

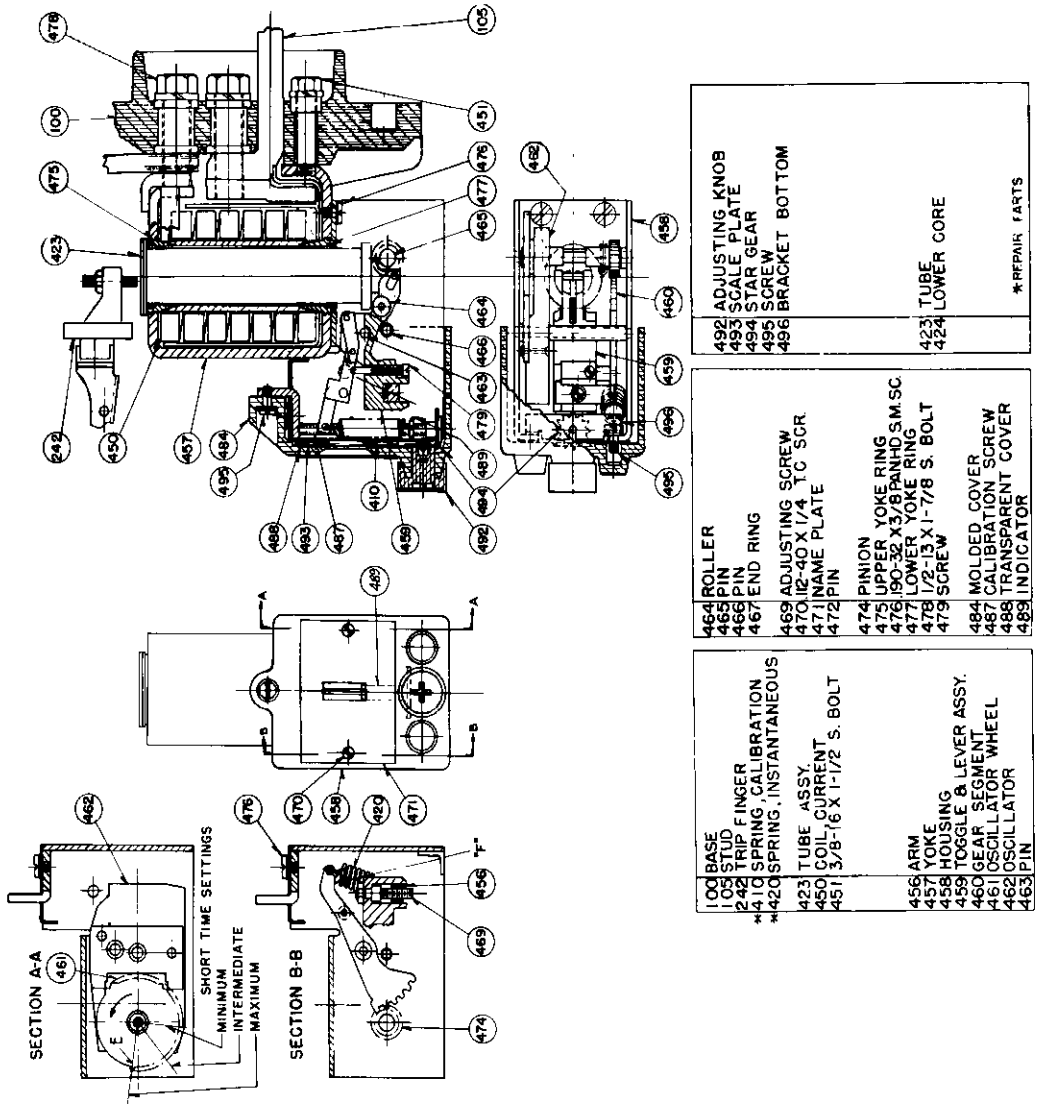

Fig. 11 — Series Overcurrent Trip Device

35-224-C5

A square shaft (555) extends through the rotor molds (560) which in turn insulate and support the rotor contacts (562). The rotor assembly is clamped together into a solid unit by screw (564). The rotor contacts are set 60° apart for 60° rotation of shaft (555).

Contact fingers (553) have one end hooked into stem (551) with spring (552) maintaining pressure between the finger contact and stem. The center of the contact finger bears against a stop surface in casing (550) to position the outer end of the contact finger.

REPLACEMENT OF AUXILIARY SWITCH

(a) Remove and tag the terminal connections.

(b) Disconnect arm (557) from closing lever, remove the two mounting bolts and remove switch.

(c) Remove link from closing lever and add new switch.

D-13. SHUNT TRIP DEVICE

Reference Figure 13

FUNCTION

The shunt trip device serves as a means of tripping the circuit breaker from some remote point by the closing of a control switch or relay contacts at that remote point.

DESCRIPTION

The shunt trip device is mounted on the extreme right end of the supporting frame shelf. It consists of a frame, coil and moving core mounted horizontally. Energizing trip coil (513) causes a magnetic attraction between stationary core (503) and moving core (504) which causes moving core (504) to move to the left rotating trip lever (501) about pin (502). Lever (501) raises trip bar (157) Fig. 1 to trip the circuit breaker. The opening of the circuit breaker de-energizes the shunt trip coil through an "a" contact of the auxiliary switch. See Section D-12. Spring (508) returns moving core (504) to its normal position. Non-magnetic washer (510) prevents residual magnetism from holding the cores together when the coil is de-energized.

REPLACEMENTS

To replace coil (513):

(a) Disconnect the shunt trip leads from the auxiliary switch and cut-off switch.

(b) Take out the two bolts (515) and remove the shunt trip assembly from the supporting frame.

(c) Remove pin (502) and screws (509) holding plate (505) in place and drop out the moving core (504), stationary core (503) and sleeve (507). The coil is then free to be replaced.

To replace spring (508):

(a) Repeat operations (a) and (b) above.

(b) Remove pin (502) and replace spring (508).

D-14. REVERSE CURRENT TRIP DEVICE (DIESEL GENERATOR BREAKER)

Reference Figure 14

FUNCTION

This device has application on direct current breakers only. It will instantaneously trip the circuit breaker when the current flows in its series coil in the reverse direction and exceeds the calibration setting. This device is set and marked in amperes, at the factory, at 120 amperes.

DESCRIPTION

This device is mounted on the center insulating base of the breaker and the top terminal of its current coil is connected to the upper stud of the circuit breaker. A copper connector (634) connects this upper stud to the lower stud of the right hand pole. Thus the series coil (624) of the reverse current trip device is connected in series with the right hand pole of the circuit breaker.

The potential coil (623) is connected directly across the line through an "a" contact of the auxiliary switch as shown in Figure 2. This contact demagnetizes the armature (603) when the breaker trips and permits calibration spring (612) to reset it.

The main structural parts of the device consist of a yoke (600), a pole piece (601), a core (610) and an armature (603), all of magnetic steel. Bearing casting (602) of non-magnetic material is drilled for pin (621) about which armature (603) has a limited freedom of rotation. If armature (603) rotates counterclockwise, it pulls pin (619) and link (606) with it. After link (606) has traveled some distance, the slot in its end engages pin (622) of trip lever (605) and moves it to the left. This causes trip lever

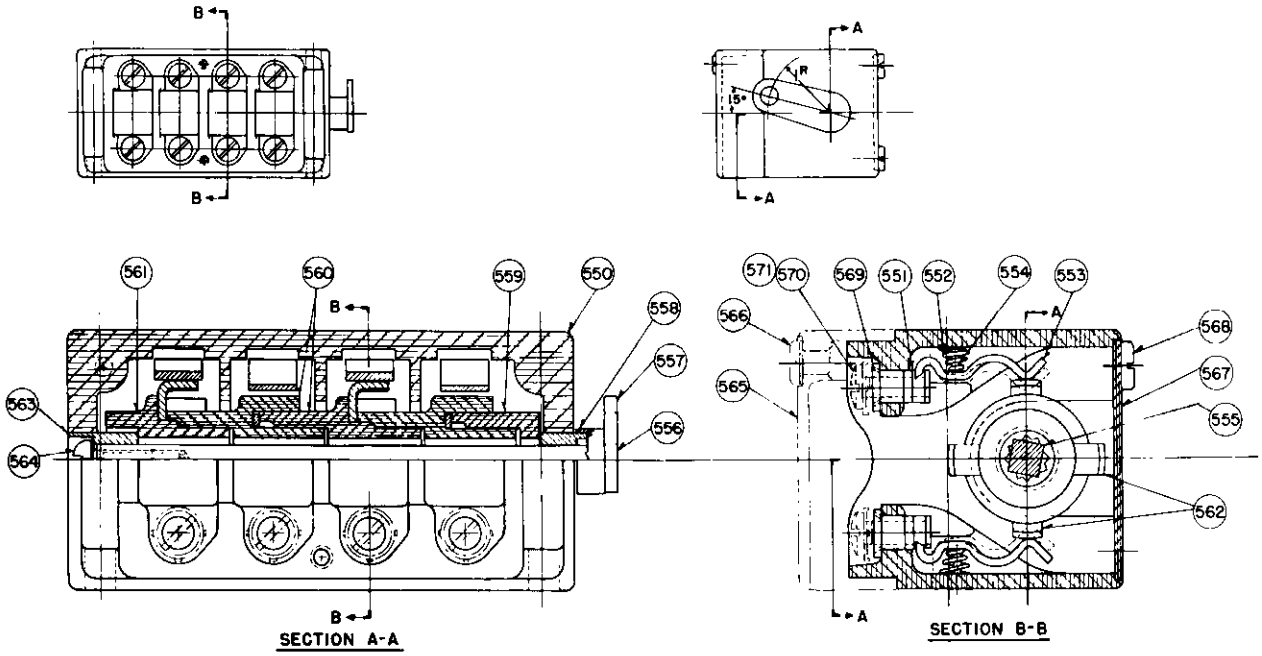

*	550	AUXILIARY SWITCH
	551	STEM
	552	CONTACT SPRING
	553	CONTACT FINGER
	554	RIVET
	555	SHAFT
	556	SHAFT END
	557	ARM
	558	SPACER
	559	ROTOR END
	560	ROTOR SECTION

561	ROTOR END
562	CONTACT
563	BUSHING
564	.190-32 X ½ RD. T. C. SEMS MACH. SCR
565	COVER
566	.164-32 X ¾ PAN BL. STL. SEMS MACH. SCR.
567	COVER
568	.164-32 X ⅜ PAN T. C. BL. STL. MACH. SCR.
569	COLLAR
570	.164-32 X ½ BD SI. BRZ MACH. SCR.
571	CRIMP WASHER

* REPAIR PARTS

FIG. 12 — Auxiliary Switch

35-224-C5

500	SHUNT TRIP FRAME
501	TRIP LEVER
502	PIN
503	STATIONARY CORE
504	MOVING CORE
505	PLATE
506	BRACKET
507	SLEEVE
* 508	SPRING, RESET
509	SCREW
510	WASHER
511	BUSHING
512	COIL SPOOL
* 513	COIL
514	LEADS
515	BOLTS
157	TRIP BAR

*REPAIR PARTS

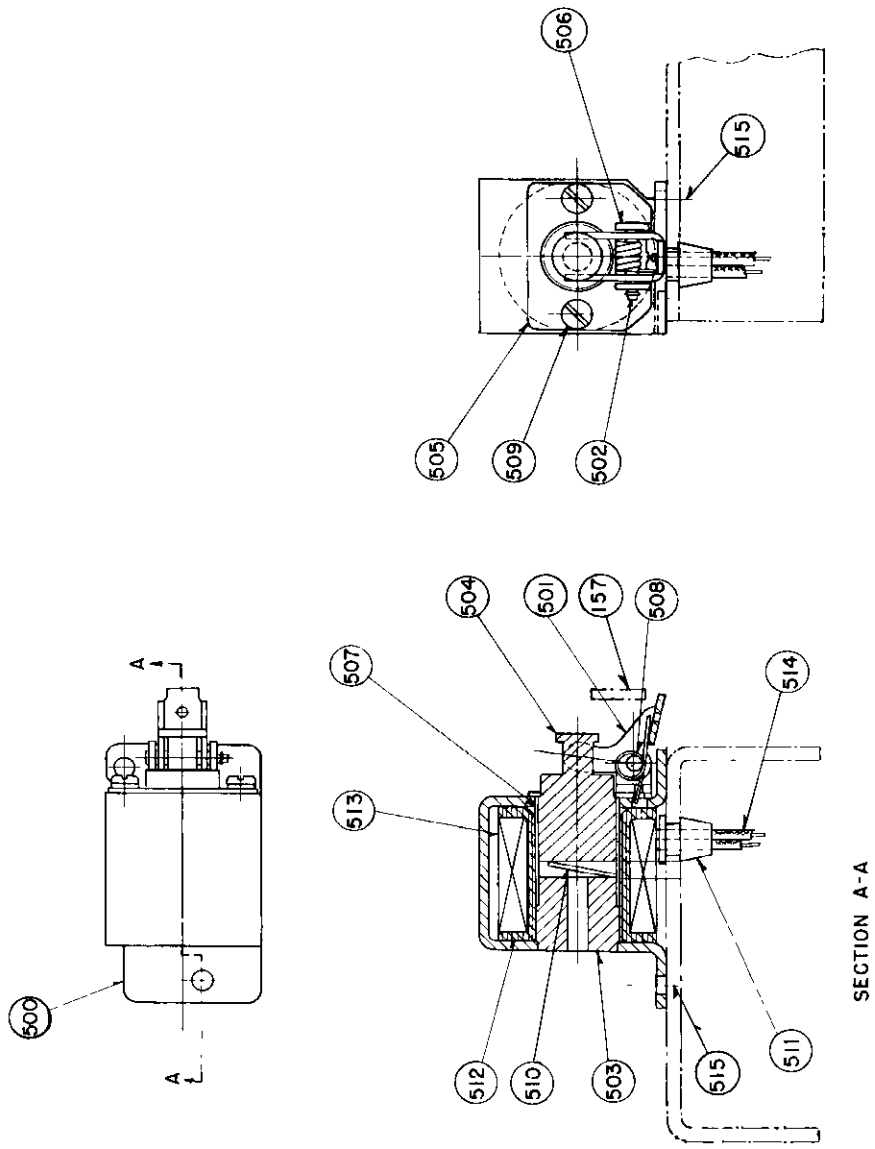

FIG. 13 — Shunt Trip Device

35-224-C5

	100	MOLDED BASE
	105	LOWER STUD
	600	YOKE
	601	POLE PIECE
	602	BEARING CASTING
	603	ARMATURE
	604	LUG
	605	TRIP LEVER
	606	LINK
	607	BAND
	608	ARM
	609	LOCKING PIECE
	610	CORE
	611	5/16-18 X 3 1/4 FLAT HD.STL.MACH.SCREW
*	612	SPRING, CALIBRATION
	613	CALIBRATION SCREW
	614	1/4-20 SET SCREW

	617	PIN
	618	.190-32 X 1/2 PAN STL.SEMS MACH.SCR.
	619	PIN
	620	PIN
	621	PIN
	622	PIN
*	623	POTENTIAL COIL
	624	SERIES COIL
	625	TUBE
	626	INSULATION
	627	INSULATION
	628	INSULATION
	629	WASHER
	630	1/2-13 X 1 7/8 HEX.STL.BOLT
	631	3/8-16 X 2 HEX.STL.BOLT
	632	3/8-16 X 1 1/2 HEX.STL.BOLT
	633	1/2-13 X 1 3/4 HEX.STL.BOLT
	634	CONNECTOR
	635	CONNECTOR

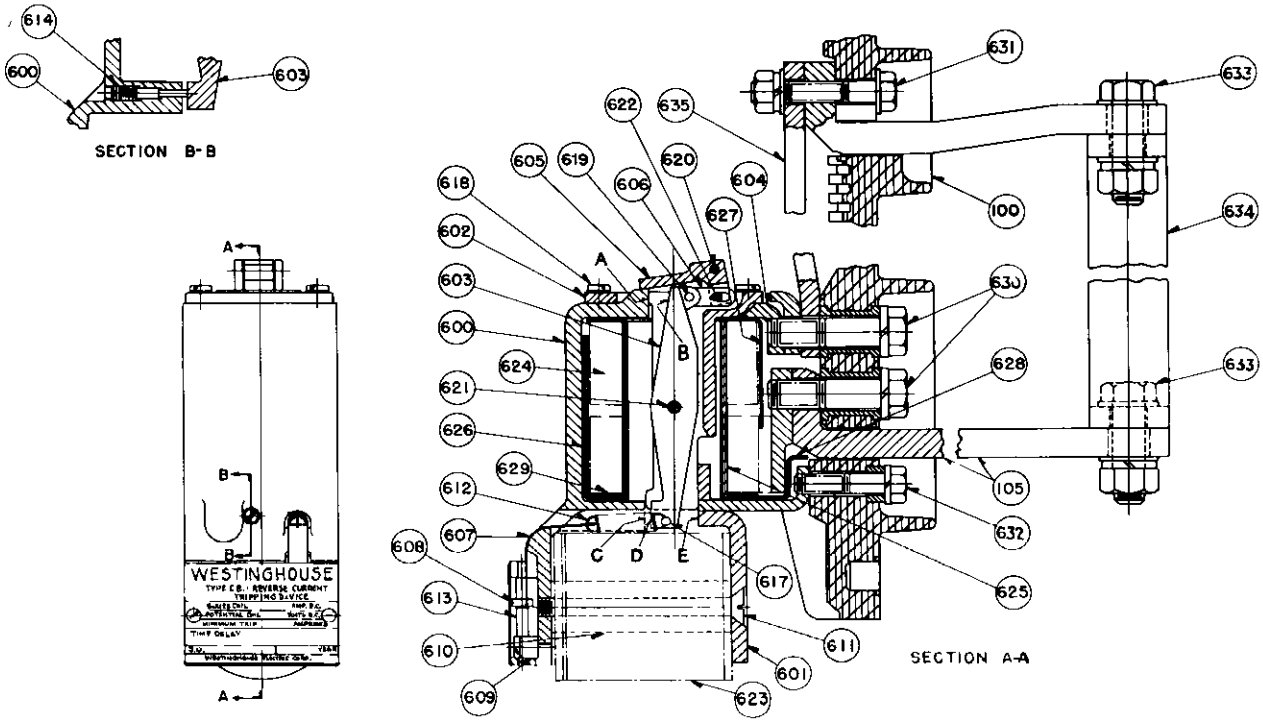

FIG. 14 — Reverse Current Trip Device

35-224-C5

(605) to rotate clockwise about fixed pin (620) in bearing casting (602). This rotation causes the trip lever (605) to move trip screw (243) Figure 1 up thus causing the circuit breaker to trip. Slot in link (606) is to enable armature (603) to gain momentum before picking up the trip load.

Each of the coils of the device, the potential coil (623) and the series coil (624), has its own magnetic circuit. With forward current flowing in series coil (624), pole B is a south pole, say, and pole A is a north pole. At the bottom of the magnetic circuit of series coil (624), pole D is a north pole and pole C is a south pole as far as the series coil magnetic circuit is concerned. In the potential coil magnetic circuit, pole E is a north pole and pole C is a south pole as far as the potential coil magnetic circuit is concerned. It can be seen that under the circumstance of forward current flow in the series coil the magnetic pull between unlike poles C and D will hold armature (603) immobile since pole C is a strong south pole due to flux from both coils while pole D is a north pole due to flux of series coil.

When the current in series coil (624) reverses, poles A and B change their polarity to south and north respectively, and pole D changes to a south pole. Since pole E is still a north pole due to the potential coil, there is now an attraction between poles D and E where repulsion existed before. Pole C is still a south pole as far as the potential coil is concerned but has become a north pole with respect to the series coil. The net result is that pole C becomes very weak and as soon as the attraction between unlike poles A and B and the attraction between unlike poles D and E becomes strong enough to overcome the tension in calibration spring (612), the armature rotates counterclockwise and trips the circuit breaker as described before.

This device is set at the factory and should not be tampered with in the field. However, it may be necessary to make a field adjustment in case calibration spring (612) has been replaced.

(a) Remove two screws in nameplate and remove nameplate from device.

(b) Remove locking piece (609).

(c) Calibration screw (613) has a square cross section and may be turned with a small wrench. Turning screw (613) so that arm (608) moves down increases the calibration setting of the device and turning it the other direction decreases the setting. The screw should be set so that the amount of reverse current indicated on the nameplate will just trip the circuit breaker.

REPLACEMENTS

(a) Calibration spring (612) can be easily replaced after removing the device from the circuit breaker. It is accessible without removing other parts. The device is removed from the breaker by removing bolts (630) and (632).

To replace potential coil (623):

(a) Disconnect wiring from terminal 4 of the auxiliary switch and from the bus as shown in wiring diagram Figure 2.

(b) Remove unit from the circuit breaker by removing bolts (630) and (632).

(c) Removing screw (611) frees the voltage coil for replacement.

NOTE: Any field adjustment of this device should be regarded as temporary pending recalibration.

D-15. REPAIR PARTS

Potential coils, springs, arcing contacts, and auxiliary switches are supplied as repair parts. Refer to consolidated repair parts list for further details.

CERTIFICATION DATA FOR CIRCUIT BREAKERS

A. MASTER DRAWING S-6205-3,166,492 REVISION A
B. MFR'S. DRAWING NO. 1-JH-453 REVISION 3
C. MASTER DRAWING FIGURES APPLICABLE TO CONTRACT 1,4,+5
WIRING DIAGRAM SHEET 2
D. APPLICABLE SPECIFICATION MIL-C-1938-ELECTRIC BOAT SPEC. NO. 557
REV. A DATED 9-2-53 AND SPECIAL SPECIFICATIONS FOR SSN-575.
E. NAVY CONTRACT OR SHIPBUILDER'S ORDER NO. NOBS-3247+T-1204-403
F. MFR'S ORDER NO. G.O. NH-50472-Y S.O. 31-Y-9531
G. CIRCUIT BREAKER TYPE AND FRAME SIZE-NAVY ACB-600 FRAME
MFR'S. DBN-40S
H. DESCRIPTION OF CIRCUIT BREAKER
VOLTAGE 355 D.C. MEANS OF CLOSING MANUAL & ELECTRIC
NO. OF POLES 2 NO. OF OVERCURRENT COILS 2
CONNECTIONS REAR MOUNTING DEAD FRONT-STATIONARY
AUXILLIARY SWITCH CIRCUITS 8 (SEE SHEET 2)
OVERCURRENT TRIPPING CURVE MFR'S. NO. 388437
I. COIL RATINGS, PICKUP AND TIME SETTINGS:—
1. OVERCURRENT COIL RATING-AMPERES 900
2. LONG-TIME DELAY PICKUP SETTING-AMPERES NONE
3. SHORT TIME DELAY PICKUP SETTING-AMPERES 2000
4. SHORT TIME DELAY BAND SETTING 3
5. INSTANTANEOUS PICKUP SETTING 15000
6. SHUNT TRIP COIL RATING-VOLTS ..... 250 (200-355) D.C.
7. CLOSE COIL RATING — VOLTS ..... 250 (200-350) D.C.
8. CLOSING RELAY COIL RATING-VOLTS ..... 250 (200-355) D.C.
9. REVERSE CURRENT TRIP SETTING-AMPERES ... NONE
10. REVERSE CURRENT POTENTIAL COIL-VOLTS ... NONE
J. NUMBER OF SHIPS INVOLVED 1
K. IDENTIFICATION NUMBERS OF SHIPS SSN-575
L. NUMBER OF CIRCUIT BREAKERS PER SHIP 3
M. TOTAL NO. OF CIRCUIT BREAKERS INVOLVED 3
N. REPAIR PARTS SEE SHEET 2
O. ADDITIONAL DATA, REMARKS, NOTES:-
HOLD-IN OMITTED.
CLOSING RELAY OPERATING COIL HAS AN INTERMITTENT RATING.
I.C. - 100,000 AMPS. - 355 V.D.C., SINGLE POLE

DRAFTSMAN	DATE	CERTIFICATION DATA	WESTINGHOUSE ELECTRIC CORPORATION EAST PITTSBURGH PA USA	
THOMSON	8-4-53	TYPE DBN 40S	DWG. 29-B-6881	
CHECKER Wagner	8-7-53	AIR CIRCUIT BREAKER		
CERTIFIED	11/15/54	150 KW. MOTOR GEN. BREAKER	BUSHIPS DWG NO.	REV.
BUSHIPS APPR. LETTER SSN575/S62/5 SER. 271C-1881 OF 15 MARCH 1954			SSN575-S6205-1444638	A
			SHEET 1 OF 3	

35-224-C9

FIG. 15-A— Motor-Generator Breaker, Certification Data

REPAIR PARTS LIST
NAVY CONTRACT– NOBS-3247 + T-1204-403
WESTINGHOUSE G.O. NH-50472-Y S.O. 31-Y-9531

ITEM NO.	NUMBER OF REPAIR PARTS	NO. INSTALLED PER VESSEL	NAME OF PART	IDENTIFICATION: WESTINGHOUSE STYLE NO.	WT. LB.	WESTINGHOUSE DRAWING NO.	STANDARD NAVY STOCK NO.
1		6	CONTACT - MOVING ARCING	1574789	.15	18-A-9894	PN 17-WX-2152
2		6	CONTACT - STATIONARY ARCING	1766536	.22	21-A-3598	PN 17-WX-3350
3		6	SPRING - ACCELERATION	1491496	.03	9-D-9360	PN 20-5-10804
4		3	SPRING - PAWL	1718591	.04	26-D-2190	PN 42-WX-3289
5		3	SPRING - ROLLER LATCH	1584498	.01	21-D-7688	PN 42-WX-3290
6		3	SPRING - RETRIEVE (MECH)	1491448	.02	13-D-6568	PN 20-5-10802
7		3	SPRING - HANDLE RETURN	1491497	.05	13-D-3193	PN 20-5-10807
8		3	SPRING - TRIP (MECH.)	1491444	.05	13-D-3193	PN 20-5-10801
9		3	SPRING - WEIGHT (A.S. OPEN)	1404668	.02	9-D-9236	PN 20-5-10806
10		3	SPRING - RESET (A.S. OPEN)	1574793	.02	18-D-6418	PN 20-5-10805
11		3	SPRING - RESET (A.S. CLOSED)	1574792	.04	15-D-2190	PS 20-5-10725
12		3	COIL - SHUNT TRIP 250 V.D.C	1581779	.6	L-484464	PM 17-WX-1984
13		3	COIL - RELAY 250 V.D.C.	1581778	.66	L-484463	PM 17-WX-1986
14		3	COIL - SOLENOID 250 V.D.C.	1581777	.3	L-484462	PN 17-WX-2488
15		3	AUXILIARY SWITCH	1645287	.9	25-B-3146	PN 17-WX-3446
16		3	BLOWOUT COIL - RELAY	1589340	.05	13-C-9668	PN 17-WX-3141
17		3	CONTACT - RELAY - L.H. STAT.	1589493	.03	23-A-3609	PN 17-WX-3351
18		3	CONTACT - RELAY - MOVING	1589495	.03	23-A-3609	PN 17-WX-3352
19		3	SPRING - RELAY - CONT. ARM	1574332	.02	17-D-5806	PN 20-5-10808
20		3	SPRING - RELAY - LATCH	1491484	.02	17-D-5806	PS 20-5-10736
21		3	SPRING - RELAY - TRIP	1533822	.02	18-D-9176	PS 20-5-10737
22		3	SPRING - RELAY - CONTACT	1491306	.01	17-D-5806	PS 20-5-10738
23		3	SPRING - SHUNT TRIP - RESET	1491282	.02	17-D-1520	PS 20-5-10729
24		3	SPRING - ANTI - BOUNCE	1718090	.01	18-D-9178	PN 42-WX-3291
25		3	SPRING - HANDLE LATCH	1589485	.02	21-D-7417	PN 17-WX-2107
26		3	AUXILIARY SWITCH	1397643	.9	19-A-3835	PN 17-WX-2151
27		12	SPRING - CALIBRATION O.C.	1574796	.02	19-D-8883	PS 20-5-10732
28		6	SPRING - INST. (O.C.)	1611891	.02	19-D-8833	PN 42-WX-3466

SEE SHEET 2 DWG. 32B5801 – BUSHIPS NO. SSN575-S6205-1444641

DRAFTSMAN	DATE
THOMSON	8-4-53
CHECKER Wagner	8-7-53
CERTIFIED	1/15/54

BUSHIPS APPR. LETTER SSN 575/562/5 SER. 271 C-1881 OF 15 MAR. 1954

CERTIFICATION DATA

TYPE DBN-405

AIR CIRCUIT BREAKER

150 KW MOTOR-GEN. BREAKER

WESTINGHOUSE ELECTRIC CORPORATION
EAST PITTSBURGH PA. U.S.A.

DWG. 29-B-6881

BUSHIPS DWG. NO.	REV.
SSN575-S6205-1444638	A

SHEET 2 OF 3

FIG. 15-B — Motor-Generator Breaker, Certification Data

35-224-C9

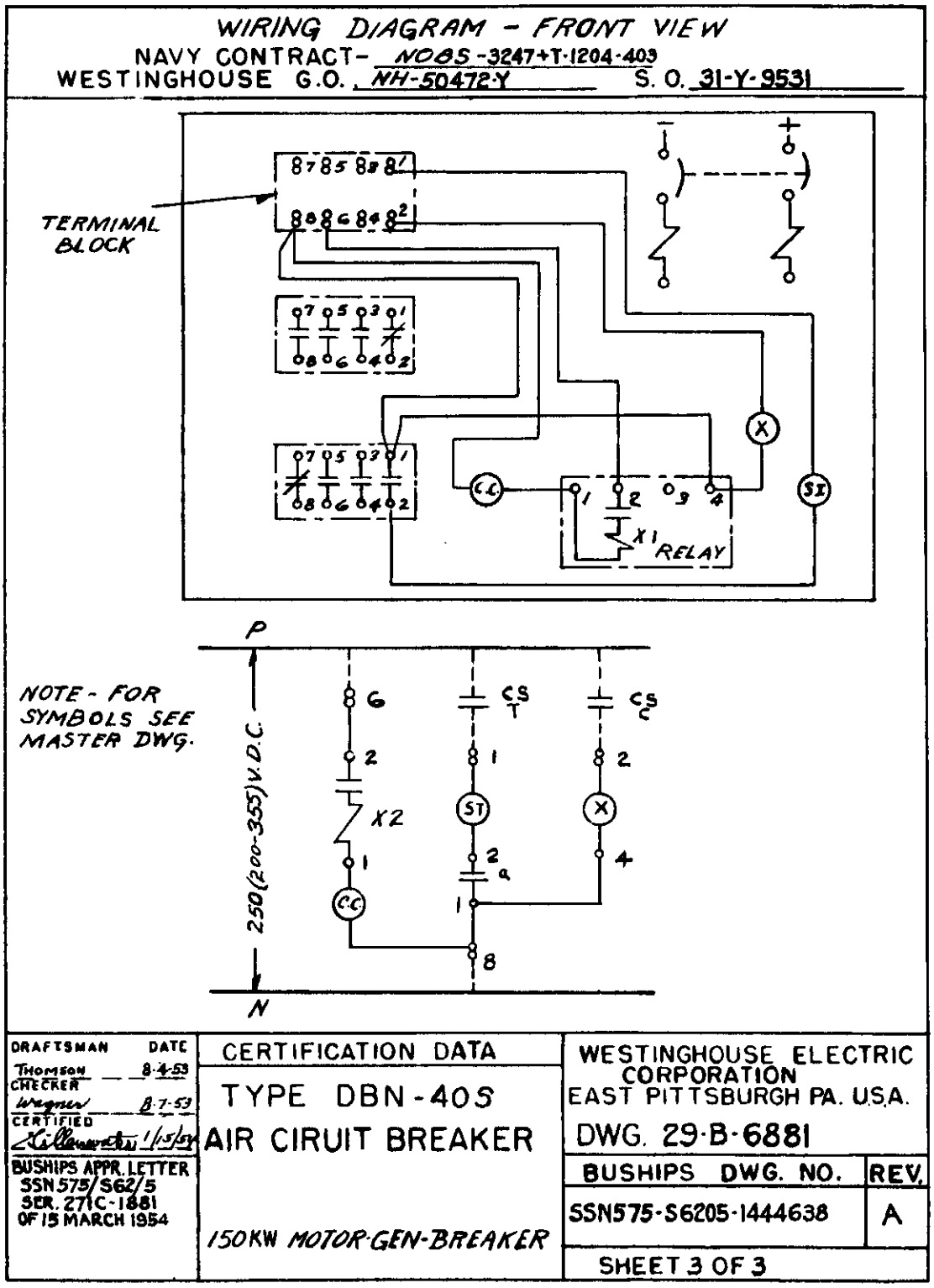

FIG. 15-C — Motor-Generator Breaker, Certification Data

35-224-C9

CERTIFICATION DATA FOR CIRCUIT BREAKERS

A. MASTER DRAWING S-6205-3,166,492 REVISION A
B. MFR'S. DRAWING NO. 1-JH-453 REVISION 3
C. MASTER DRAWING FIGURES APPLICABLE TO CONTRACT 1,5
WIRING DIAGRAM NONE
D. APPLICABLE SPECIFICATION MIL-C-1938 - ELEC. BOAT SPEC. NO. 557
REV. 'B' DATED 4-11-55 AND SPECIAL SPECIFICATIONS FOR SSN 575.
E. NAVY CONTRACT OR SHIPBUILDER'S ORDER NO. NOBS-3247+T-1204-403
F. MFR'S ORDER NO. . . . . GO NH-50472-Y S.O. 31-Y-9532
G. CIRCUIT BREAKER TYPE AND FRAME SIZE-NAVY ACB-600 FRAME
MFR'S. DBN-40S
H. DESCRIPTION OF CIRCUIT BREAKER
VOLTAGE 355 D.C. MEANS OF CLOSING MANUAL
NO. OF POLES 2 NO. OF OVERCURRENT COILS 2
CONNECTIONS REAR MOUNTING DEAD FRONT-STATIONARY
AUXILLIARY SWITCH CIRCUITS 4(3A & 1B)
OVERCURRENT TRIPPING CURVE MFR'S. NO. 362409
I. COIL RATINGS, PICKUP AND TIME SETTINGS:—
1. OVERCURRENT COIL RATING-AMPERES 640
2. LONG-TIME DELAY PICKUP SETTING—AMPERES NONE
3. SHORT TIME DELAY PICKUP SETTING-AMPERES 1500
4. SHORT TIME DELAY BAND SETTING 1
5. INSTANTANEOUS PICKUP SETTING 2500
6. SHUNT TRIP COIL RATING-VOLTS . . . . . NONE
7. CLOSE COIL RATING — VOLTS . . . . . NONE
8. CLOSING RELAY COIL RATING—VOLTS . . . . . NONE
9. REVERSE CURRENT TRIP SETTING— AMPERES . . . NONE
10. REVERSE CURRENT POTENTIAL COIL — VOLTS . . . NONE
J. NUMBER OF SHIPS INVOLVED 1
K. IDENTIFICATION NUMBERS OF SHIPS SSN-575
L. NUMBER OF CIRCUIT BREAKERS PER SHIP 2
M. TOTAL NO. OF CIRCUIT BREAKERS INVOLVED 2
N. REPAIR PARTS — — — — — — — — SEE SHEET 2
O. ADDITIONAL DATA, REMARKS, NOTES:-
HOLD-IN OMITTED
I.C.-100,000 AMPS-355 V.D.C., SINGLE POLE

DRAFTSMAN	DATE	CERTIFICATION DATA	WESTINGHOUSE ELECTRIC CORPORATION
THOMSON	8-6-53	TYPE DBN-40 S	EAST PITTSBURGH PA. USA
CHECKER [signature]	8-7-53	AIR CIRCUIT BREAKER	DWG. 29-B-6882
CERTIFIED [signature]	1/15/54	AUXILIARY POWER BREAKER	

BUSHIPS APPR. LETTER	REV.	DES.	EBB	USN	BUSHIPS DWG NO.	REV
SSN575/S62/5 SER. 271C-1881 OF 15 MARCH 1954 [signature]	B	PG. 1, REV. 5-1-55 H.D.M. 6-2-55 M.P.B. PARAGRAPH D, I3, & I5 IN ACCORDANCE WITH REV. B EB SPEC. NO. 557.			SSN575-S6205-1444639	B
					SHEET 1 OF 2	

FIG. 16-A — Auxiliary Power Breaker, Certification Data

35-224-C9

REPAIR PARTS LIST
NAVY CONTRACT– NOBS-3247+T-1204-403
WESTINGHOUSE G.O. NH-50472-Y S.O. 31-Y-9532

ITEM NO.	NUMBER OF REPAIR PARTS	NO. INSTALLED PER VESSEL	NAME OF PART	IDENTIFICATION: WESTINGHOUSE STYLE NO.	WT. LB.	WESTINGHOUSE DRAWING NO.	STANDARD NAVY STOCK NO.
1	SEE SHEET 2 DWG. 32B5801 – BUSHIPS NO. SSN575-S6205-1444641	4	CONTACT-MOVING ARCING	1574789	.15	18-A-9834	PN17-WX-2152
2		4	CONTACT-STATIONARY ARCING	1766536	.22	21-A-3538	PN17-WX-3350
3		4	SPRING-ACCELERATION	1491496	.03	9-D-9360	PN20-5-10804
4		2	SPRING-PAWL	1718591	.09	26-D-2190	PN42-WX-3289
5		2	SPRING-ROLLER LATCH	1584498	.01	21-D-7688	PN42-WX-3290
6		2	SPRING-RETRIEVE (MECH.)	1491448	.02	13-D-6568	PN 20-5-10802
7		2	SPRING-HANDLE RETURN	1491497	.05	13-D-3193	PN 20-5-10807
8		2	SPRING-TRIP (MECH.)	1491444	.05	13-D-3193	PN 20-5-10801
9		2	SPRING-WEIGHT (A.S. OPEN)	1404668	.02	9-D-9236	PN 20-5-10806
10		2	SPRING-RESET (A.S. OPEN)	1574793	.02	18-D-6418	PN 20-5-10805
11		2	SPRING-RESET (A.S. CLOSED)	1574792	.04	15-D-2190	PS 20-5-10275
12		2	SPRING-ANTI-BOUNCE	1718000	.01	18-D-9178	PN42-WX-3291
13		2	SPRING-HANDLE LATCH	1589485	.02	21-D-7417	PN17-WX-2107
14		8	SPRING-CALIBRATION (O.C.)	1574736	.02	19-D-8833	PS 20-5-10732
15		4	SPRING-INST. (O.C.)	1611892	.02	19-D-8833	P20S-11141
16		2	SWITCH AUX.	1397643	.9	18-A-3835	PN17WX-2151

DRAFTSMAN	DATE	CERTIFICATION DATA	WESTINGHOUSE ELECTRIC CORPORATION EAST PITTSBURGH PA. U.S.A.
Thomson	8-6-53	TYPE DBN	DWG. 29-B-6882
CHECKER		AIR CIRCUIT BREAKER	BUSHIPS DWG. NO. / REV.
CERTIFIED	8-7-53	AUXILIARY POWER BREAKER	SSN575-S6205-1444639 / B
BUSHIPS APPR. LETTER SSN575/562/5 SER. 271C-1881 OF 15 MARCH 1954			SHEET 2 OF 2

FIG. 16-B — Auxiliary Power Breaker, Certification Data

35-224-C9

CERTIFICATION DATA FOR CIRCUIT BREAKERS

A. MASTER DRAWING S-6205-3,166,492 REVISION A
B. MFR'S. DRAWING NO. 1-JH-453 REVISION 3
C. MASTER DRAWING FIGURES APPLICABLE TO CONTRACT 1,5,6,7 & 7A
WIRING DIAGRAM SHEET 3
D. APPLICABLE SPECIFICATION MIL-C-1938, ELEC. BOAT SPEC. NO. 557 REV. "B" DATED 4-11-55 AND SPECIAL SPECIFICATIONS FOR SSN575.
E. NAVY CONTRACT OR SHIPBUILDER'S ORDER NO. NOBS-3247+T-1204-403
F. MFR'S ORDER NO. G.O. NH-50472-Y S.O. 32-Y-4409
G. CIRCUIT BREAKER TYPE AND FRAME SIZE-NAVY ACB-600 FRAME
MFR'S. DBN-405
H. DESCRIPTION OF CIRCUIT BREAKER
VOLTAGE 355 DC MEANS OF CLOSING MANUAL & ELECTRIC
NO. OF POLES 2 NO. OF OVERCURRENT COILS 2
CONNECTIONS REAR MOUNTING DEAD FRONT-STATIONARY
AUXILLIARY SWITCH CIRCUITS 8 (SEE SHEET 3)
OVERCURRENT TRIPPING CURVE MFR'S. NO. 362406
I. COIL RATINGS, PICKUP AND TIME SETTINGS:—
1. OVERCURRENT COIL RATING-AMPERES 1200
2. LONG-TIME DELAY PICKUP SETTING—AMPERES NONE
3. SHORT TIME DELAY PICKUP SETTING-AMPERES 2500
4. SHORT TIME DELAY BAND SETTING ..... #1
5. INSTANTANEOUS PICKUP SETTING 4000
6. SHUNT TRIP COIL RATING-VOLTS ..... 250(200-355) DC
7. CLOSE COIL RATING — VOLTS ..... 250(200-355) DC
8. CLOSING RELAY COIL RATING—VOLTS ..... 250(200-355) DC
9. REVERSE CURRENT TRIP SETTING— AMPERES ... 120
10. REVERSE CURRENT POTENTIAL COIL — VOLTS ... 250(200-355) DC
J. NUMBER OF SHIPS INVOLVED 1
K. IDENTIFICATION NUMBERS OF SHIPS SSN-575
L. NUMBER OF CIRCUIT BREAKERS PER SHIP 2
M. TOTAL NO. OF CIRCUIT BREAKERS INVOLVED 2
N. REPAIR PARTS — — — — — — — — — — — SHEET NO. 2
O. ADDITIONAL DATA, REMARKS, NOTES:-
ELECTRIC LOCKOUT 250(200-355)VDC (ENERGIZED TO CLOSE BREAKER)
CLOSING RELAY OPERATING COIL HAS AN INTERMITTENT RATING.
HOLD-IN OMITTED.
I.C. -100,000 AMPS - 355 V.D.C., SINGLE POLE

DRAFTSMAN R.J. HYDAK DATE 1-5-54	CERTIFICATION DATA				WESTINGHOUSE ELECTRIC CORPORATION EAST PITTSBURGH PA. USA
CHECKER — — —	TYPE DBN-40S				
CERTIFIED 1/15/54	AIR CIRCUIT BREAKER				
	DIESEL GENERATOR BREAKER				DWG. 32B5801
BUSHIPS APPR. LETTER SSN575/S62/5 SER. 271C-1881 OF 15 MARCH 1954	REV	DES.	EBB	U.S.N	BUSHIPS DWG NO. / REV.
	B	PG. 1 REV. PAR D, 14, 15 PER REV. B EB SPEC. 557. PG. 3, ADD SHUNT, CONT. 5-6 TO R.C. POT. COIL CIRCUIT.	4-28-55	H.D.M. 4-28-55	M.P.B. SSN575-S6205-1444641 / B
					SHEET 1 OF 3

FIG. 17-A — Diesel-Generator Breaker, Certification Data

35-224-C9

REPAIR PARTS LIST o-31-Y-9531
NAVY CONTRACT—NOBS-3247+T-1204-403 Δ-31-Y-9532
WESTINGHOUSE G.O. NH-50472-Y **S.O.*** 32-Y-4409

	ITEM NO.	NUMBER OF REPAIR PARTS	NO. INSTALLED PER VESSEL	NAME OF PART	IDENTIFICATION: WESTINGHOUSE STYLE NO.	WT. LB.	DRAWING NO.	STANDARD NAVY STOCK NO.
o Δ *	1	9	14	CONTACT-MOVING ARCING	1574789	.15	18-A-9894	PN17-WX-2152
o Δ *	2	9	14	CONTACT-STATIONARY ARCING	1766536	.22	21-A-3598	PN17-WX-3350
o Δ *	3	3	14	SPRING-ACCELERATION	1491496	.03	9-D-9360	PN20-S-10804
o Δ *	4	2	7	SPRING-PAWL	1718591	.04	26-D-2190	PN42-WX-3289
o Δ *	5	2	7	SPRING-ROLLER LATCH	1584498	.01	21-D-7688	PN42-WX-3290
o Δ *	6	2	7	SPRING-RETRIEVE (MECH)	1491448	.02	13-D-6568	PN20-S-10802
o Δ *	7	2	7	SPRING-HANDLE RETURN	1491497	.05	13-D-3193	PN-20-S-10807
o Δ *	8	2	7	SPRING-TRIP (MECH)	1491444	.05	13-D-3193	PN20-S-10801
o Δ *	9	2	7	SPRING-WEIGHT (A.S. OPEN)	1404668	.02	9-D-9236	PN20-S-10806
o Δ *	10	2	7	SPRING-RESET (A.S. OPEN)	1574793	.02	18-D-6418	PN20-S-10805
o Δ *	11	2	7	SPRING-RESET (A.S. CLOSED)	1574792	.04	15-D-2190	PS20-S-10725
o *	12	2	5	COIL-SHUNT TRIP 250 V.D.C.	1581779	.6	L-484464	PM17-WX-1984
o *	13	2	5	COIL-RELAY 250 V.D.C.	1581778	.66	L-484463	PM17-WX-1986
o *	14	2	5	COIL-SOLENOID 250 V.D.C.	1581777	3	L-484462	PN17-WX-2488
*	15	1	2	COIL-REV. CURR. 250 V.D.C.	1581705	2.1	L-484461	PN17-WX-2227
o *	16	2	5	BLOWOUT COIL-RELAY	1589340	.05	13-C-9668	PN17-WX-3141
o *	17	3	5	CONTACT-RELAY-LH STAT	1589493	.03	23-A-3609	PN17-WX-3351
o *	18	3	5	CONTACT-RELAY-MOVING	1589495	.03	23-A-3609	PN17-WX-3352
o *	19	1	5	SPRING-RELAY-CONT. ARM	1574332	.02	17-D-5806	PN20-S-10808
o *	20	1	5	SPRING-RELAY-LATCH	1491484	.02	17-D-5806	PS20-S-10736
o *	21	1	5	SPRING-RELAY-TRIP	1533822	.02	18-D-9176	PS20-S-10737
o *	22	1	5	SPRING-RELAY-CONTACT	1491306	.01	17-D-5806	PS20-S-10738
o *	23	1	5	SPRING-SHUNT TRIP-RESET	1491282	.02	17-D-1520	PS20-S-10729
o Δ *	24	2	7	SPRING-ANTI-BOUNCE	1718000	.01	18-D-9178	PN42-WX-3291
o Δ *	25	2	7	SPRING-HANDLE LATCH	1589485	.02	21-D-7417	PN17-WX-2107
o Δ *	26	2	6	AUXILIARY SWITCH	1397643	.9	18-A-3835	PN17-WX-2151
o Δ *	27	4	28	SPRING-CALIBRATION O.C.	1574796	.02	19-D-8833	PS20-S-10732
o *	28	2	5	AUXILIARY SWITCH	1645287	.9	25-B-3146	PN17WX-3446
*	29	1	2	COIL-ELEC. LOCKOUT	1611630		L-484465	PN17WX-2492
*	30	1	2	SPRING-CALIBRATION (R.C.)	1589382	.02	18-D-9178	PN17WX-2111
o	31	2	6	SPRING-INST. (O.C.)	1611891	.02	19-D-8833	PN42-WX-3446
*	32	1	2	SPRING-ELEC. LOCKOUT	1611601		18-D-9178	PN42-S-16339-5900
Δ *	33	2	8	SPRING-INST. (O.C.)	1611892		19-D-8833	P20S-11141

DF TCM CHK'ED R.J. Nicol 1/5/54
CERTIFIED 1/15/54
J.H. Lichtenwalter

BUSHIPS APPR. LETTER SSN575/S62/5 SER. 271C-1881 OF 15 MARCH 1954

AIR CIRCUIT BREAKER
TYPE DBN 40S
DIESEL GENERATOR BREAKER

EAST PITTSBURGH PA. U.S.A.
DWG. 32B5801

BUSHIPS DWG. NO.	REV.
SSN575-S6205-1444641	B

SHEET 2 OF 3

35-224-C9

Fig. 17-B — Diesel-Generator Breaker, Certification Data

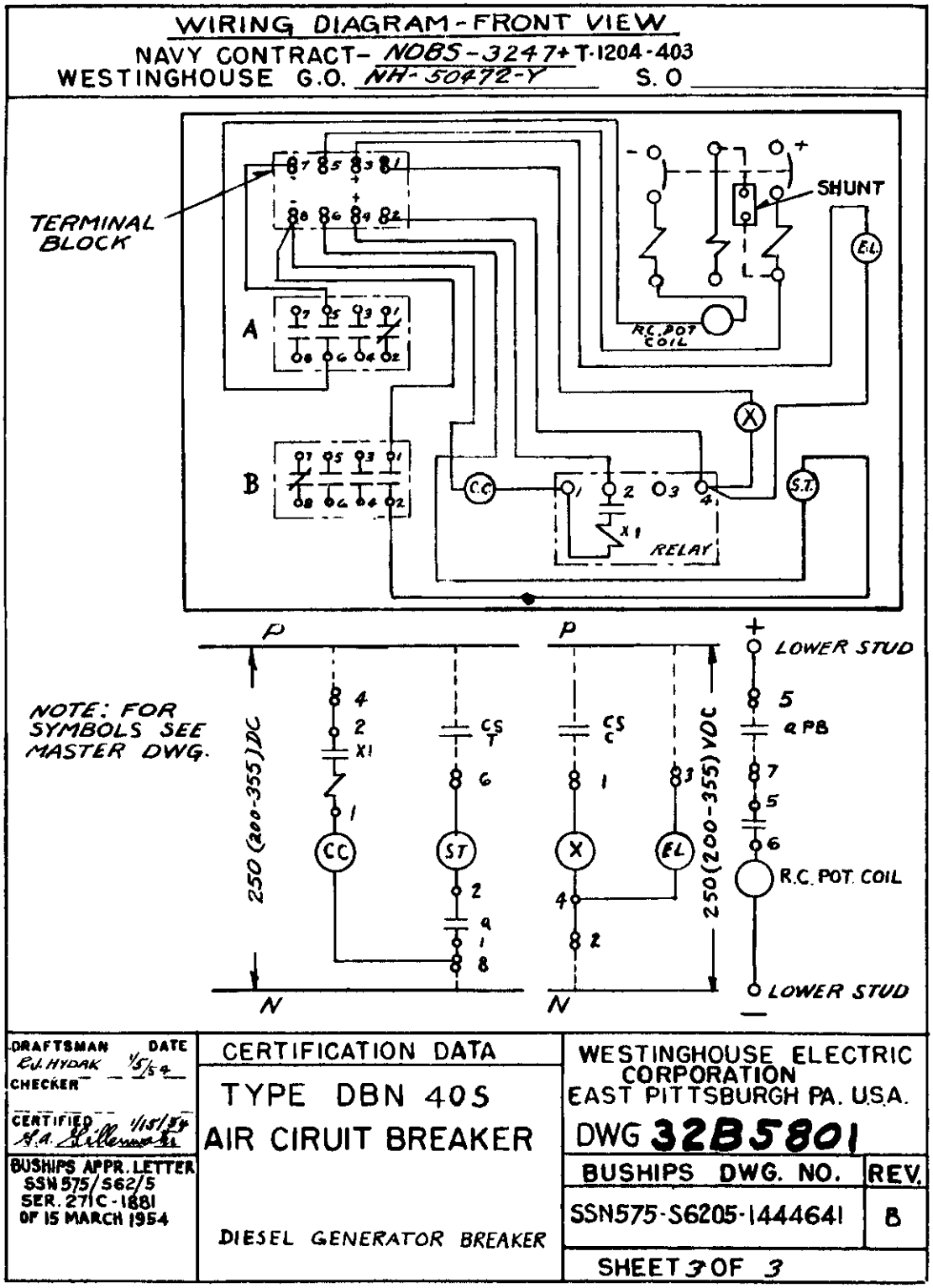

Fig. 17-C — Diesel-Generator Breaker, Certification Data

35-224-C9