NAVSHIPS 362-0748

PART II CHAPTER 3

SWITCHBOARD INSTRUCTION BOOK

NAVY TYPE ACB

1600-AMPERE FRAME SIZE

AIR CIRCUIT BREAKER

WESTINGHOUSE TYPE DBN-60

(STANDARDIZED DIMENSIONS)

INSTRUCTION BOOK 35-270-C2

WESTINGHOUSE ELECTRIC CORPORATION
EAST PITTSBURGH, PA., U.S.A.

BUREAU OF SHIPS • NAVY DEPARTMENT • SEPTEMBER, 1951

INDEX

AIR CIRCUIT BREAKER
Navy Type ACB (Westinghouse Type DBN 60)
1600 Amp. Frame Size
60,000 Amp. A-c and 50,000 Amp. D-c Interrupting Capacity
Westinghouse Electric Corp. Dwg. 1-JH-231
Buships Plan S6202-H-3, 102, 260

Description	Page
SECTION A - INTRODUCTION	1
List of Illustrations and Calibration Curves	1
Circuit Breaker Dimension Plan (Dwg. 22-B-7299)	3-4
SECTION B - GENERAL INFORMATION	5
Manually Operated Circuit Breaker	5
Electrically Operated Circuit Breaker	7
SECTION C - OPERATION AND MAINTENANCE	7
Caution	7
Wiring Diagram	7
Calibration	7
Shunt Tripping	7
Electric Closing (D-c)	7
Electric Closing (A-c)	8
Maintenance	8
SECTION D - COMPONENTS AND ATTACHMENTS	8
General Assembly (Manually Operated Breaker)	8
General Assembly (Electrically Operated Breaker)	8
Arc Chutes	8
Contact Assembly	10
Mechanism	11
Anti-Shock-Close Device	13
Hold-In Device	15
Closing Magnet (Electrically Operated Breaker)	15
Closing Relay (Electrically Operated Breaker)	17
Anti-Shock-Open Device	22
Series Overcurrent Trip Device	22
Auxiliary Switch	26
Shunt Trip Device	28
Reverse Current Trip Device (D-c Circuit Breaker)	28
Spare Parts List	32

AIR CIRCUIT BREAKER
NAVY TYPE ACB—WESTINGHOUSE TYPE DBN-60

SECTION A — INTRODUCTION

A-1 List of Illustrations and Calibration Curves

Fig. No.	Westinghouse Ref. Dwg.	Title	Page
1	33-A-6087	General Assembly	6
2	33-A-6088	Pole Unit	9
3	33-A-6091	Mechanism	12
4	23-B-6033	Anti-Shock-Close Device	14
5	23-B-6032	Hold-in Device	16
6	33-A-6090	Closing Magnet	18
7	33-A-6089	Closing Relay	19
8	22-B-7154	Anti-Shock-Open Device	21
9	33-A-6086	Series Overcurrent Trip Device	23
10	351775	Time vs. Current Calibration Curves	25
11	33-A-6084	Auxiliary Switch	27
12	22-B-7588	Shunt Trip Device	29
13	33-A-6085	Reverse Current Trip Device	30

A-2 Circuit Breaker Dimension Plan

	W.E. CORP PLAN	BUSHIPS PLAN	TITLE
1.	22-B-7299	S6202-2272	Standard Outline for Navy Type ACB 1600 Amp. Frame Air Circuit Breaker

This plan gives the standard dimensions of Navy Type ACB, 1600 ampere frame size air circuit breakers of which the DBN-60 is the Westinghouse Electric Corporation representative.

ker Dimension Plan

PLAN	TITLE
-2272	Standard Outline for Navy Type ACB 1600 Amp. Frame Air Circuit Breaker

ensions of Navy Type ACB, 1600 ampere which the DBN-60 is the Westinghouse .

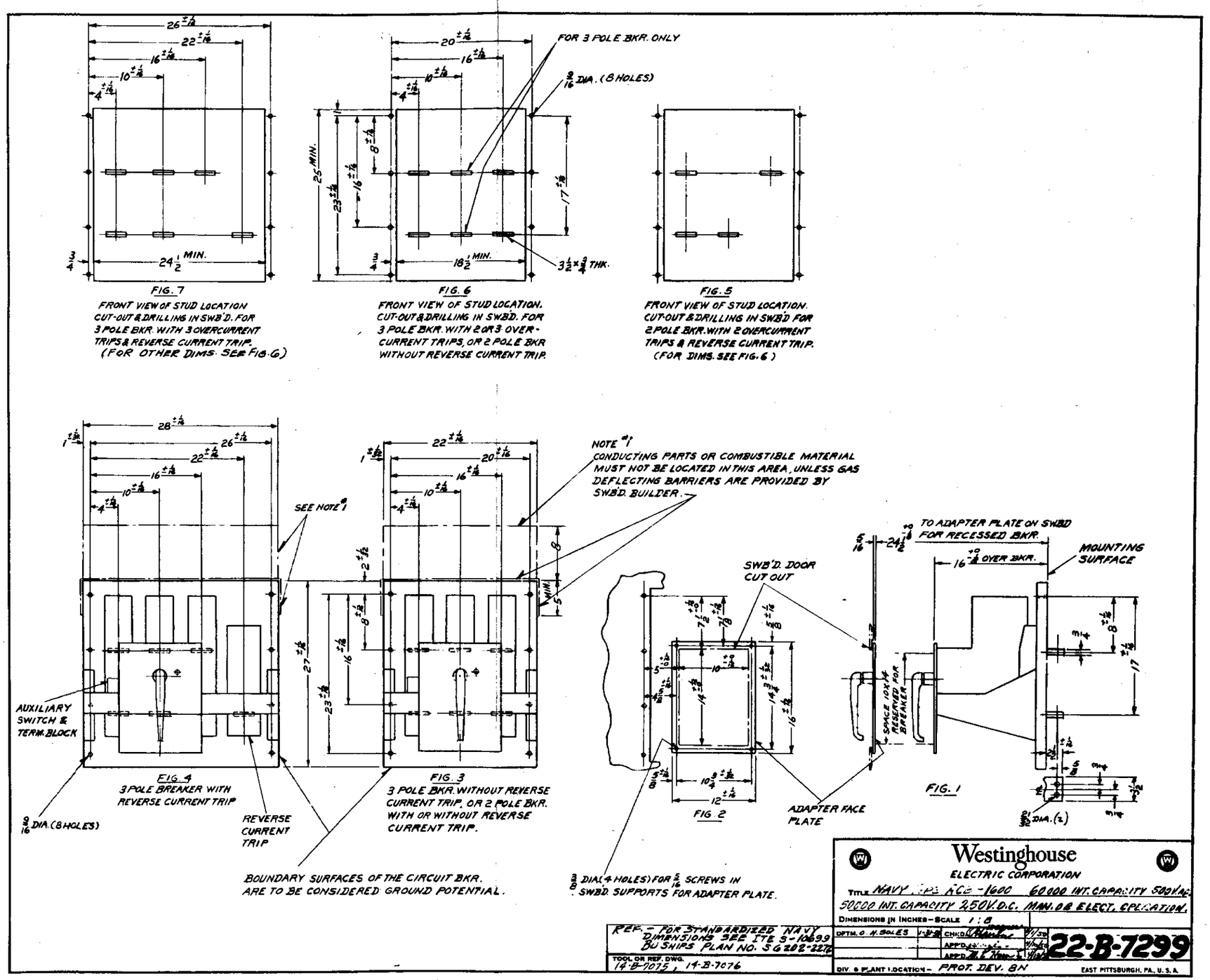

SECTION B — GENERAL INFORMATION

B-1. MANUALLY OPERATED CIRCUIT BREAKER

The DBN-60 air circuit breaker is a sturdy compact piece of shipboard electrical equipment consisting of a rigid steel chassis to which are bolted the several sub-assemblies which make up the complete circuit breaker. For example, the mechanism, pole units, arc chutes, overcurrent trip devices and other attachments are each complete within themselves and are readily interchangeable between breakers. They may be removed intact and replaced if necessary with minimum outage time.

The DBN-60 is a type ACB air circuit breaker of 1600 ampere frame size. Its interrupting and continuous current ratings are as outlined in the following table:

INTERRUPTING RATING

500 V. 60 Cycle A-C	250 V. D-C
R.M.S. Amperes A-C	Maximum Amperes D-C
60,000	50,000

CONTINUOUS CURRENT RATING

Circuit Breaker Copper Rating Amperes	Overcurrent Trip Coil Ratings Amperes	
1600	100	560
	160	640
	250	800
	320	1000
	400	1200
	480	1400
		1600

The chassis of the DBN-60 air circuit breaker consists of a rigid steel panel (150) Fig. 1 on the front of which is bolted a supporting frame (151) which supports shelf (152) and faceplate (155). A separate pole unit molded base (100) is bolted to the steel panel for each pole. A three pole breaker is illustrated in Fig. 1. A two pole breaker would have the same general appearance but the center pole unit would be omitted.

The base of each pole unit is molded from insulating material. When supplied, the series overcurrent trip devices (400) and the reverse current trip device (600) are bolted to the lower part of the pole unit base. The moving contact assembly is pivoted at its lower end on the pole unit base and is connected to the lower stud either directly or through a series overcurrent trip device. The stationary contact assembly is connected directly to the upper stud. The moving contact assembly opens and closes the electric circuit by moving out and in from the stationary contact assembly. An arc chute is mounted above and surrounding each pair of contacts. Its purpose is to extinguish the arc drawn when the contacts separate.

The operating mechanism (200) is located on the breaker shelf (152) and transmits the force for closing the breaker from the operating handle (166) to the cross bar (168) and thence to the moving contact assembly through insulating links. The mechanism then latches and holds the contacts in the closed position. The circuit breaker is closed manually by turning the operating handle (166) 90° clockwise and it may be tripped manually by turning the handle 45° in the opposite direction. Handle latch (233) must be depressed when closing or tripping the circuit breaker manually. Automatic tripping is accomplished by one of the automatic devices which lift the trip bar when suitably energized. These devices consist of the shunt trip (500), the series overcurrent trip (400) and the reverse current trip (600), any or all of which may be supplied with an individual circuit breaker. Unless otherwise specified, an eight contact auxiliary switch (550), with terminal block, is supplied with each circuit breaker.

The main power circuit through the circuit breaker consists of the lower stud, series overcurrent trip coil (if supplied), moving contact assembly, stationary contact, and upper stud, all connected in series in the order named. D-c circuit breakers supplied with reverse current protection have a somewhat different arrangement. See Section D-14.

MOUNTING

DBN-60 circuit breakers are suitable for flush mounting in which arrangement the faceplate (155) is just behind the switchboard front plate, or for recessed mounting. The standard depth from the rear mounting surface of the circuit breaker panel to the front of the faceplate is 16 inches. Provision is made, when specified, for a recessed mounting depth of

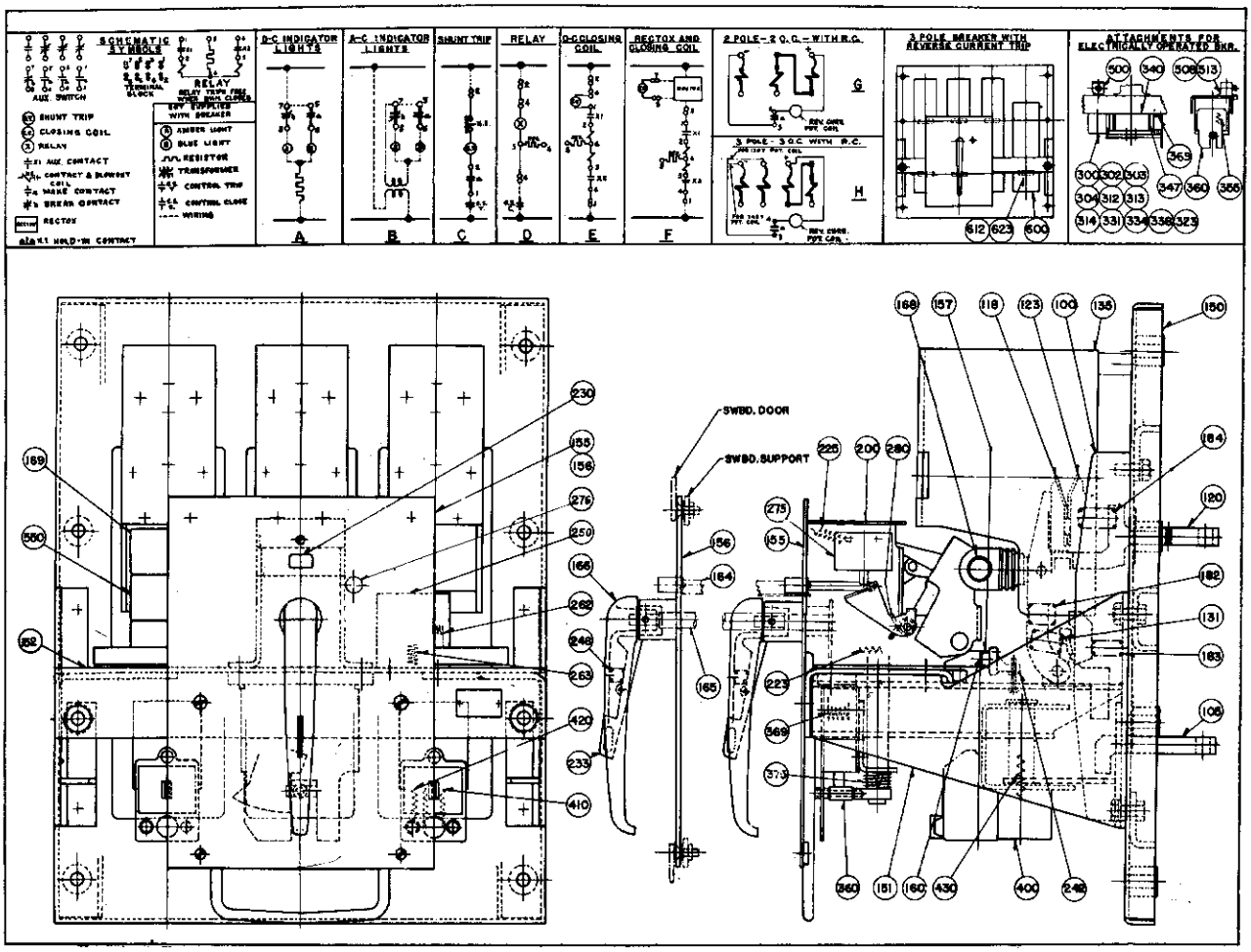

100	MOLDED BASE
105	LOWER STUD
120	UPPER STUD
135	ARC CHUTE
150	STEEL PANEL
151	SUPPORTING FRAME
152	SHELF
155	FACE PLATE
156	ADAPTER PLATE FOR RECESSED MOUNTING
157	TRIP BAR
160	ELASTIC STOP NUT
164	HOLD-IN EXTENSION
165	HANDLE EXTENSION
166	OPERATING HANDLE
168	CROSS BAR
169	TERMINAL BLOCK
200	MECHANISM
230	POSITION INDICATOR
233	HANDLE LATCH
242	TRIP FINGER
250	ANTI-SHOCK-OPEN DEVICE
275	HOLD-IN BUTTON
300	CLOSING RELAY
340	CLOSING MAGNET
360	ANTI-SHOCK-CLOSE DEVICE
400	OVERCURRENT TRIP
500	SHUNT TRIP DEVICE
600	REVERSE CURRENT

	— SPARE PARTS —
118	CONTACT, MOVING ARCING
123	CONTACT, STATIONARY ARCING
134	SPRING, ACCELERATING
182	SPRING, MAIN CONTACT
183	SPRING, AUXILIARY CONTACT
184	SPRING, ARCING CONTACT
223	SPRING, ROLLER LATCH
225	SPRING, PAWL
248	SPRING, HANDLE LATCH
262	SPRING, RESET (A-S-OPEN)
263	SPRING, WEIGHT (A-S-OPEN)
275	SWITCH, CUT-OFF
280	SPRING, RETURN (HOLD-IN)
302	MAGNET, BLOWOUT (RELAY)
303	CONTACT, MOVING (RELAY)
304	CONTACT, STATIONARY (RELAY) (R.H.)
312	SPRING, CONTACT (RELAY)
313	SPRING, TRIP (RELAY)
314	SPRING, CONTACT ARM (RELAY)
323	RESISTOR (RELAY)
331	CONTACT, STATIONARY (RELAY) (L.H.)
334	SPRING, LATCH (RELAY)
336	COIL (RELAY)
347	COIL (CLOSING MAGNET)
355	SPRING, KICKER (RELAY)
369	SPRING, RESET (A-S-CLOSE)
375	SPRING, ROD (A-S-CLOSE, MANUALLY OPER.)
410	SPRING, CALIBRATION (O.C.)
420	SPRING, INSTANTANEOUS (O.C.)
430	SPRING SHORT TIME DELAY (O.C.)
506	SPRING, RESET (SHUNT TRIP)
513	COIL (SHUNT TRIP)
550	SWITCH, AUXILIARY
612	SPRING CALIBRATION (REV. CURR.)
623	COIL (REV. CURR.)

FIG. 1 — General Assembly

24-1/2 inches. See "Circuit Breaker Dimension Plan" Section A2. A breaker intended for recessed mounting is provided with an additional faceplate called an adapter plate (156), an operating handle extension (165), and a hold-in device extension (164).

B-2. ELECTRICALLY OPERATED CIRCUIT BREAKER

The electrically operated DBN-60 circui breaker is basically the same equipment described in Section B-1 with the exception that it is equipped with a closing magnet (340) and a closing relay (300). These two attachments plus a source of closing power and a control switch enable an operator to close the circuit breaker from a remote point.

An external rectifier is supplied for electrically closing the circuit breaker from an a-c supply.

It should be noted that the addition of a closing magnet for electrical operation does not in any way change the manual operation features of the circuit breaker and that an electrically operated DBN-60 circuit breaker can also be manually operated.

SECTION C — OPERATION AND MAINTENANCE

CAUTION

Before working on a circuit breaker, load and control circuits feeding it must be de-energized. The breaker should be in the open position, but is should be noted that all circuit breaker studs are not necessarily dead when circuit breaker is open.

Before putting the circuit breaker in regular operation it should be closed and tripped manually several times to see whether all parts are in proper alignment and move freely. Particular care should be taken to make sure the studs have not been forced out of alignment by the bus work. Lift the trip bar by hand with the circuit breaker open to make sure that it does not bind.

WIRING DIAGRAM

Reference Figure 1

Fig. 1 shows typical wiring diagrams of the DBN-60.

CALIBRATION

Series Overcurrent Trip Devices

The overcurrent trip devices are calibrated at the factory for long time delay pickup, short time delay pick-up, short time delay time band, and for instantaneous pick-up. The long time delay pick-up is the only calibration setting readily adjustable in the field. Details may be found in Section D-11 "Series Overcurrent Trip Device."

CALIBRATION

Reverse Current Trip Device

The reverse current trip device is set at the factory to trip the circuit breaker at a reverse current value equal to either 5 or 10 percent of the full load current rating of the series coil of the device. The device is calibrated with the voltage coil operated at rated voltage which is either 120 or 240 volts.

SHUNT TRIPPING

Shunt trip coils for d-c shunt tripping have a nominal voltage of either 120 or 240 volts.

For the 120 volt coil, the voltage range is from 70 to 140 volts. For the 240 volt coil, the voltage range is from 140 to 280 volts.

Shunt trip coils for a-c shunt tripping have a nominal voltage of either 115 or 450 volts.

For the 115 volt coil, the voltage range is from 80 to 130 volts. For the 450 volt coil, the voltage range is from 320 to 500 volts.

ELECTRIC CLOSING (D-C)

Closing coils and closing relays for d-c closing have a nominal voltage of either 120 or 240 volts.

For the 120 volt coils, the voltage range is from 90 to 130 volts. For the 240 volt coils, the range is from 180 to 260 volts.

ELECTRIC CLOSING (A-C)

Closing coils for a-c closing are connected through a "Rectox" which is a dry disc rectifier furnished as an external device and not as an integral part of the circuit breaker. Relay coils are connected to the a-c side of the line.

The closing coil with its Rectox and the closing relay have a nominal a-c voltage of either 115 or 450 volts.

For the 115 volt system, the voltage range is from 90 to 130 volts. For the 450 volt system, the range is from 320 to 500 volts.

MAINTENANCE

The frequency of inspection for maintenance will depend upon local conditions but, in general, a complete inspection for preventive maintenance should be made at least once a year. It is recommended that a special inspection be given any breaker that has opened a heavy short circuit current.

If excessive heating not caused by overcurrent is observed, look for loose or corroded contacts or connections.

When inspecting the circuit breaker, examine the contact surfaces. Rough or high spots should be removed with a clean file or sandpaper. Do not use emery cloth since the dust from this material is a good conductor of electricity and is sure to cause trouble if allowed to settle on insulating surfaces.

Arc chutes which are badly burned and corroded should be replaced.

More detailed maintenance instructions are given later on in the sections on the individual attachments.

SECTION D — COMPONENTS AND ATTACHMENTS

D-1. GENERAL ASSEMBLY (Manually Operated Circuit Breaker)

The DBN-60 air circuit breaker for three phase a-c service is normally provided with series overcurrent trip devices in the two outer poles only. Otherwise, all three poles are identical, each being provided with a stationary and moving contact assembly, and an arc chute.

For a two wire d-c breaker with reverse current protection, the overcurrent trip devices are located on the two outer pole unit bases and a reverse current trip device is mounted on the center base. On this center base, the stationary and moving contact assembly is replaced by a copper connector which connects the series coil of the reverse current trip device to the upper stud.

For a three wire d-c breaker with reverse current protection, a wider panel (28 inches) is required. In this case, all three poles are used and are provided with series overcurrent trip devices with the center or neutral overcurrent trip rated at 25% the rating of the outside poles. The reverse current trip device is mounted on a molded base on the right side of the three poles.

More specific information is listed under applicable sections in this book.

D-2. GENERAL ASSEMBLY (Electrically Operated Circuit Breaker)

The general assembly of the electrically operated DBN-60 is similar to that of the manually operated breaker. The addition of a closing magnet and closing relay makes the breaker electrically operated. In addition to this, the anti-shock-close device is arranged to act on the moving core of the closing magnet rather than directly on the mechanism as in the case of manually operated breakers.

For more specific information, reference should be made to applicable sections of this book.

D-3. ARC CHUTES

Reference Fig. 2

FUNCTION

The arc chute (135) mounted above and surrounding the contact assembly of each pole, has the function of stretching and cooling the arc drawn by the separating contacts so that it may be quickly extinguished and the circuit opened in the least possible time. The arc chutes are an extremely important part of the circuit breaker and the breaker should never be energized without their being mounted in place.

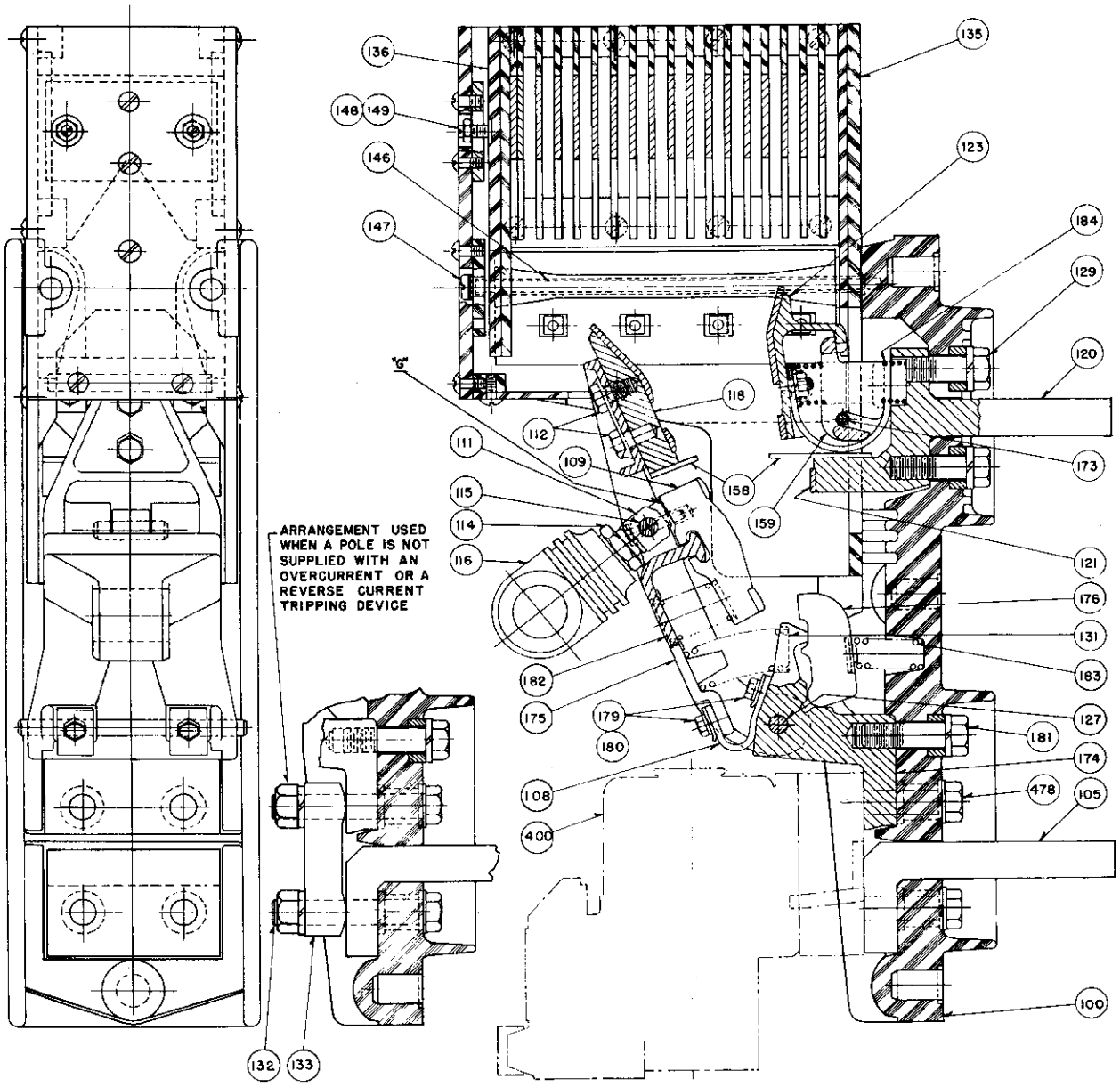

	100	MOLDED BASE
	105	LOWER STUD
	108	SHUNT
	109	MAIN MOVING CONTACT ASSEMBLY
	111	LINK
	112	5/16-18 X 1/2 HEX. STL. BOLT
	114	5/16-18 BRS. LOCKNUT
	115	PIN
	116	MOLDED LINK
*	118	CONTACT, MOVING ARCING
	120	UPPER STUD ASSEMBLY
	121	STATIONARY CONTACT
*	123	CONTACT, STATIONARY ARCING

	127	PIN
	129	1/2-13 X 1 1/2 HEX. STL. BOLT
*	131	SPRING, ACCELERATING
	132	1/2-13 X 3 HEX. STL. BOLT
	133	CONNECTOR
	135	ARC CHUTE
	136	CLAMPING PLATE
	146	TUBE SPACER
	147	5/16-18 X 8 1/4 PAN. HD. STL. SCREW
	148	1/4-20 HEADLESS SET SCREW
	149	1/4-20 GALV. STL. LOCKNUT
	158	CONTACT SHIELD
	159	ARCING CONTACT HINGE

	173	PIN
	174	MOVING CONTACT ARM HINGE
	175	MOVING CONTACT ARM
	176	AUXILIARY CONTACT
	179	1/4-20 X 1/2 HEX. STL. BOLT
	180	SHUNT CLIP
	181	1/2-13 X 2 1/2 HEX. STL. BOLT
*	182	SPRING, MAIN CONTACT
*	183	SPRING, AUXILIARY CONTACT
*	184	SPRING, ARCING CONTACT
	400	OVERCURRENT TRIP
	478	1/2-13 X 2 1/2 HEX. STL. BOLT

* SPARE PARTS

FIG. 2 — Pole Unit

DESCRIPTION

Each arc chute consists of a number of metal and asbestos plates (140) supported in a laminated case and held in place by a clamping plate (136) and insulating tube spacers (146) and two screws (147) through the insulating spacers to the molded base (100). When the arc is drawn by the separating contacts, it moves up into the chute by magnetic and thermal action where it is quickly de-ionized and extinguished thus opening the circuit.

REPLACEMENTS

When inspection shows that the plates of the arc chute are badly burned it should be replaced by removing screws (147).

D-4. CONTACT ASSEMBLY

Reference Fig 2

FUNCTION

The contact assembly closes and opens the electric circuit through the circuit breaker. The upper stud (120), the stationary contact (121), the series overcurrent trip device (400) (when supplied) and the lower stud (105) are stationary and are mounted rigidly on the molded base (100). The moving contact assembly is hinged on the molded base by pin (127) and is moved in and out by molded insulating link (116) which is pivoted on cross bar (168) Fig. 1.

The moving contact assembly is closed and held in the closed position against the force of the accelerating springs (131) by the insulating link (116). When the force exerted by the insulating link is released by tripping the breaker, the accelerating spring quickly moves the moving contact assembly to the open position. When the breaker interrupts high short circuit currents, magnetic forces play a large part in the rapid opening of the contacts.

When the circuit breaker is tripped, the moving contact assembly moves away, drawing the arc between the arcing contacts. This arrangement minimizes arc damage to main current carrying contacts. When the circuit breaker is closed the arcing contact surfaces touch first and then the main contacts touch and the closing operation is completed.

DESCRIPTION

The stationary contact assembly consists of the main contact extruded integral with the upper stud (120) and the arcing contact (123) held to copper section by two screws (124). All contact surfaces are special arc resisting silver alloy inserts.

The moving contact assembly consists of a contact arm (175) which is pivoted to the pole unit by pin (127) and which carries main moving contact (109) and moving arcing contact (118). Auxiliary contact (176) serves as a bridge between main moving contact (109) and connector to the upper terminal of the series coil of the overcurrent trip device.

The moving contact assembly is attached to the mechanism cross bar (168) Fig. 1 by molded insulating link (116) which is screwed on metal link (111) and locked by nut (114). When the breaker is tripped all force is removed from the cross bar and accelerating spring (131) quickly snaps the moving contact assembly from the closed to the open position.

ADJUSTMENTS

The correct contact pressure of the DBN-60 is obtained when gap "G" measures .030 to .070 inch when the circuit breaker is closed. This gap may be adjusted after removing arc chute (135) by removing two screws (147) and cross bar (168). Loosen locknut (114) and turn insulating link counterclockwise if the gap is too small, and clockwise if the gap is too large. The locknut should be retightened and the cross bar and arc chutes replaced.

REPLACEMENTS

To replace stationary arcing contact (123) or spring (184):

(a) Remove arc chute (135) by removing screws (147).
(b) Remove the two bolts holding the contact assembly and replace either it or the spring as required.

To replace moving arcing contact (118):
(a) Remove arc chute (135) by removing screws (147).
(b) Removal of bolts (112) frees the contact for replacement.

To replace main contact springs (182):

(a) Remove arc chute (135) by removing screws (147).
(b) Springs are held by locking clips in contact arm (175). These clips release the springs when depressed and rotated with a screw driver or with the fingers.

To replace accelerating springs (131):

(a) Remove arc chute (135) by removing screws (147).
(b) Springs may be worked out of their sockets with a screwdriver.

To replace auxiliary contact springs (183):

(a) Remove arc chute (135) by removing screws (147).
(b) Springs may be worked out with a screwdriver and replaced. If difficulty is experienced loosen moving contact arm hinge by loosening bolts in vicinity of lower stud holding overcurrent trip and contact arm hinge.

D-5. MECHANISM

Reference Fig. 3

FUNCTION

The operating mechanism opens and closes the circuit breaker contacts by moving the cross bar (168) Fig. 1 to which the moving contact assemblies are attached by insulating links. The DBN-60 is closed manually by turning the operating handle quickly and smoothly as far as it will go (90°) in a clockwise direction. The breaker may be tripped manually by turning the handle 45° in a counterclockwise direction. Handle latch (233) must be depressed when closing or tripping the breaker manually. The breaker is tripped automatically by one of the automatic devices described later which rotate trip lever (200) about pin (224).

The mechanism is "trip free", that is, it is not possible to close the breaker if one of the automatic tripping devices moves the trip bar (157) Fig. 1 up during the closing stroke or if the trip bar is held in the raised position.

DESCRIPTION

The operating mechanism consists of a group of toggle links, and a latch attached to the operating mechanism frame on fixed pins (214), (226), (241), (216), (224), and (245). The cross bar (168) Fig. 1 is held by the closing lever (207). Rotating the operating handle clockwise moves the mechanism linkage from the open position shown in Fig. 3 to the closed position shown. This is accomplished when the roller (236) located off-center on the end of the operating handle shaft (232) forces the first toggle link (203) upward pushing second toggle link (204), third toggle link (206) and closing lever (207) ahead of it. The motion of the toggle linkages is directed by link (205) which is pivoted at its lower end on pin (217) in latch (208). Latch (208) in turn is restrained from moving by roller latch (210) which is pivoted on pin (214) and engages trigger (221) on trip lever (220). The linkage is held in the closed position by pawl (209) which latches under pin (227). The handle shaft and lever are returned to the normal position after closing by gravity.

The mechanism is opened by rotating trip lever (220) counterclockwise. This is accomplished either by rotating handle counterclockwise, in which case roller (236) on the end of the handle shaft lever strikes the extreme left end of trip lever (220) to move it downward; or by causing the tripping attachments to strike trip finger screw (243) or trip bar (157) Fig. 1. In either case the counterclockwise rotation of the trip lever (220) moves trigger (221) out of engagement with the lower end of the roller latch (210), which in turn permits the roller latch to rotate counterclockwise out of engagement with latch (208). Latch (208) is then free to rotate in response to the pull of the latch link (205) so that the mechanism assumes the trip free position in which the contacts are open but part of the mechanism levers are in the closed position. In this position pawl (209) is disengaged from pin (227) by a lug on link (204) which pushes it up permitting the linkage to collapse to the open position shown in Fig. 3.

Gravity returns the operating handle to the normal vertical position after manual tripping. Handle latch (233) engages a depression in handle shaft bearing to prevent accidental tripping by flipping of the handle.

POSITION INDICATOR

Position indicator (230) is formed from sheet metal and is pivoted on pin (241). It is visible from the front of the circuit breaker through a window in the faceplate and mechanism frame. See Fig. 1. With the circuit breaker in the open position shown in Fig. 3, the yellow face of the indicator shows through the window. The word "OPEN" is stamped on this yellow face. When the breaker closes, pin (218) of the closing lever (207) pulls indicator link (228) to the right, thus rotating the other face of the indicator up into a position visible through the window. This face is painted blue and is stamped with the word "CLOSED".

REPLACEMENTS

To replace roller latch spring (223):

(a) Prepare to remove mechanism by removing

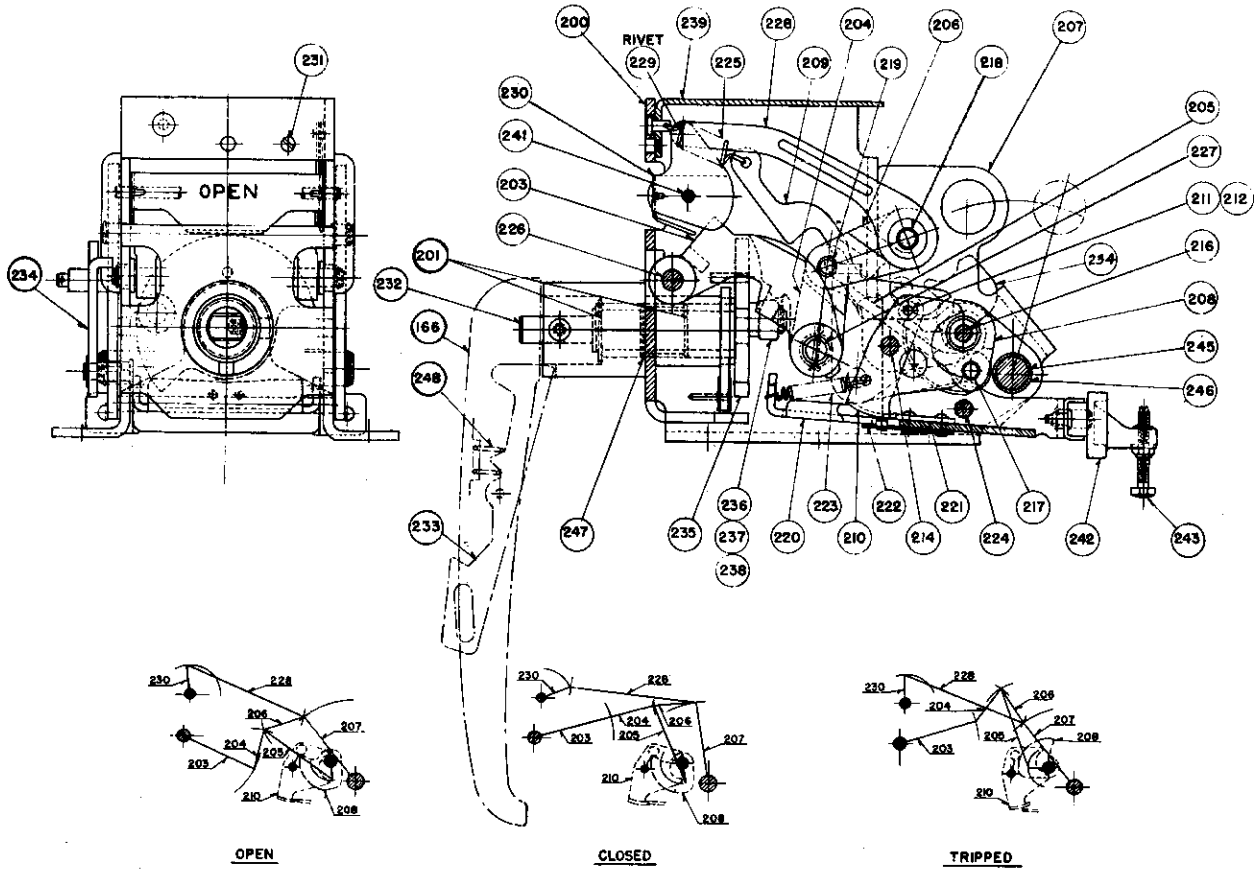

	166	OPERATING HANDLE
	200	FRAME, MECHANISM
	201	BEARING, ROLLER
	203	LINK, FIRST TOGGLE
	204	LINK, SECOND TOGGLE
	205	LINK
	206	LINK, THIRD TOGGLE
	207	LEVER, CLOSING
	208	LATCH
	209	PAWL
	210	LATCH, ROLLER
	211	ROLLER
	212	PIN
	214	PIN
	216	PIN
	217	PIN
	218	PIN
	219	PIN
	220	LEVER, TRIP
	221	TRIGGER
	222	STOP, SPRING
*	223	SPRING, ROLLER LATCH

	224	PIN
*	225	SPRING, PAWL
	226	PIN
	227	PIN
	228	LINK, INDICATOR
	229	PIN
	230	INDICATOR
	231	SCREW, .138-32 X 3/8 PAN HD.
	232	SHAFT
	233	HANDLE LATCH
	234	ANTI-BOUNCE LATCH
	235	LEVER
	236	ROLLER
	237	BEARING, NEEDLE
	238	PIN
	239	COVER
	241	PIN
	242	FINGER, TRIP
	243	SCREW, TRIP
	245	PIN
	246	SPACER
	247	SPACER
*	248	SPRING, HANDLE LATCH

* SPARE PARTS

FIG. 3 — Mechanism

anti-shock-open device (250), cutoff switch (275) and terminal block (169) and auxiliary switch (550) all of Fig. 1. Avoid removing any more wires than necessary. It will usually be possible to push the devices aside without removing the wiring. Tag any wires which may have to be removed.

(b) Rotate handle (166) clockwise until pin (277) is visible through a hole in the right side of the mechanism frame. Using a small rod as a pusher, shove this pin part way through the hole until the rod of the anti-shock-close device, in the case of manually operated circuit breakers, or the operating rod of the closing magnet, in the case of electrically operated circuit breakers, drops off. Return the pin (227) to its proper location and allow linkages to fall open. This frees mechanism from anti-shock close device or the closing magnet as the case may be.

(c) Remove handle (166), faceplate (155) and cross bar (168) of Fig. 1.

(d) Remove the four bolts which hold mechanism to the shelf (152) Fig. 1. This frees mechanism from shelf but frees also either anti-shock close device (360) of manually operated breakers or closing magnet (340) of electrically operated breakers.

These devices should be temporarily replaced while repairs are being made to the mechanism.

(e) Removal of pin (224) enables trip lever (220) to be removed and spring (223) may then be replaced.

To replace pawl spring (225):
(a) This spring may be easily replaced after removing mechanism cover (239).

To replace handle latch spring (248):

(a) This spring is easily replaced after removing handle (166) and handle latch (233).

D-6. ANTI-SHOCK-CLOSE DEVICE

Reference Fig. 4 for Manually Operated Breakers

Reference Fig. 6 for Electrically Operated Breakers

FUNCTION

This device serves to prevent the circuit breaker contacts from closing from shock when open. This is accomplished by an arrangement whereby a mechanical escapement device or "ticker" is operated by the closing of the breaker. Shock blows tending to close the breaker are on such short duration that the mechanical escapement device does not have time to operate and the device effectively locks the open circuit breaker in the open position under shock conditions.

DESCRIPTION

The anti-shock-close device consists of a ticker case (360) Fig. 4 which contains the ticker assembly, bolted to the platform by two bolts (379). A rod and cam pusher assembly (363) is connected at its upper end to pin (227) Fig. 6 of the mechanism. Whenever circuit breaker is closed, rod (363) is pulled up by pin (227) and cam (361) is caused to rotate in a clockwise direction around pin (370) against the torsion of reset spring (369). As the cam rotates in this manner, oscillator wheel (362) is caused to rotate clockwise around pin (372) by pin (368) mounted in cam (361). The rotation of wheel (362) is regulated by mechanical oscillator (364) which is pivoted on pin (365). This oscillator oscillates due to the engagement of its teeth with the teeth of oscillator wheel (362). When the circuit breaker is tripped, rod (363) drops unimpeded and return spring (369) returns cam and consequently oscillator wheel to the "breaker open" position shown in the figure.

Shock blows tending to close the circuit breaker would have to act in such a way as to raise rod (363). These blows are of such short duration that the cam is restrained long enough by the oscillator wheel and oscillator to prevent closure of the circuit breaker.

REPLACEMENTS

(Manually Operated Circuit Breaker)

To replace return spring (369):

(a) Remove handle (166) and faceplate (155) Fig. 1.

(b) Remove guide pieces (374) and (375) by removing bolt (376).

(c) Remove bolts (379) and remove case (360) from shelf.

(d) Removing truarc rings (367), (371) and (373) will allow corresponding pins to be removed. The various parts are then free to be removed and the spring may be replaced.

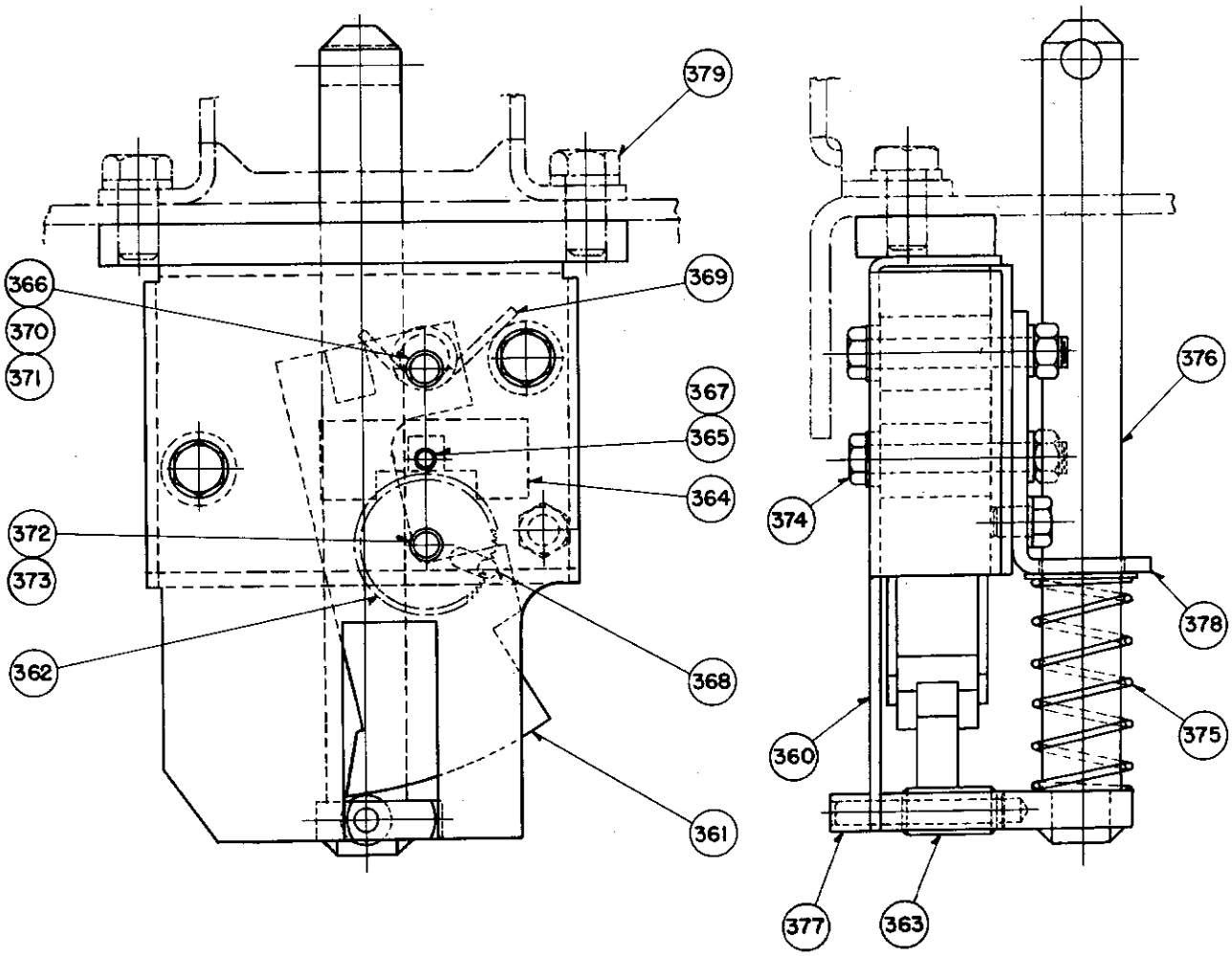

	360	CASE OF ANTI-SHOCK-CLOSE DEVICE
	361	CAM
	362	WHEEL
	363	ROLLER
	364	OSCILLATOR
	365	PIN
	366	BRS. WASHER
	367	TRUARC RING
	368	PIN
*	369	SPRING, RESET

	370	PIN
	371	TRUARC RING
	372	PIN
	373	TRUARC RING
	374	BOLT
*	375	SPRING, ROD
	376	OPERATING ROD
	377	ARM
	378	GUIDE
	379	BOLT

* SPARE PARTS

FIG. 4 — Anti-Shock—Close Device

(e) After reassembly, be sure that the cam operates freely and that it returns freely to its starting position when pushed over.

REPLACEMENTS

(Electrically Operated Breakers)

(a) Omit steps (a) (b) and (c) above.

(b) Remove 3 bolts holding device to side of closing magnet.

(c) Repeat steps (d) and (e) above.

D-7. HOLD-IN DEVICE

Reference Fig. 5.

FUNCTION

This device prevents manual or automatic tripping of the circuit breaker as long as the hold-in button (276) Fig. 8 is pushed in. No provision is made to lock it in the hold-in position. If an overcurrent of greater magnitude than the long time delay pick-up setting occurs during the time the hold-in button is pressed in and persists long enough to have tripped the circuit breaker had the button not been pressed, the circuit breaker will trip out upon release of the hold-in button. An exception to the above statement occurs when the current after an overcurrent drops to a value lower than 30% of coil rating in which case the trip devices will reset and the breaker will not trip.

DESCRIPTION

Pushing on button (276) rotates lever (279) clockwise about pin (214) Fig. 6 of mechanism. Projection (281) which is a part of lever (279) if forced against roller latch (210) of Fig. 6 to hold it inoperative regardless of tripping impulses. In other words, trip lever (220) is free to move without tripping the breaker.

Extension on lever (279) pushes button of switch (275) upward to open the shunt trip coil circuit through hold-in contact and thus prevent overheating of the coil should the shunt trip coil be energized during the time the hold-in device is held in.

REPLACEMENTS

To replace return spring (280):

(a) Remove anti-shock-open device (250) Fig. 1 from shelf thus exposing hold-in device.

(b) Remove cross bar (168) Fig. 1.

(c) Remove closing lever (207) Fig. 3 which holds pin (214) captive. This is accomplished by removing one truarc ring from end of pin (245).

(d) Remove truarc ring from end of pin (214) and slide pin in far enough to release spring (280).

D-8. CLOSING MAGNET
(Electrically Operated Circuit Breaker)

Reference Fig. 6.

FUNCTION

The closing magnet is the device used to close the circuit breaker electrically and is mounted directly below the mechanism and under the shelf of the circuit breaker. It is secured to the shelf with the same four bolts that hold the mechanism in place.

Together with a control switch, a source of power, and the closing relay, the closing magnet enables an operator to close the circuit breaker from a remote point.

DESCRIPTION

The closing magnet consists of an iron frame or yoke (340) which is securely bolted to the circuit breaker shelf by 4 bolts (349), a plunger or moving core (342), an operating rod (343), a stationary core (351), and a coil (347).

The operating rod (343) connects the moving core (342) to pin (227) Fig. 6 of the mechanism. It will be observed that an upward movement of this pin will cause the mechanism to close and latch the circuit breaker.

When coil (347) of the solenoid is energized by contact of relay (see section D-9, Fig. 7) the moving core (342) moves upward in response to the magnetic attraction between stationary and moving cores across air gap "A". About one-tenth of a second is required for the solenoid to close and latch the circuit breaker. When the moving core moves into the "breaker closed" or "closed gap" position, trip bracket (359) trips the relay mechanically, and its contacts open, thus de-energizing the closing magnet. Trip bracket (359) in moving up lifts trip rod (357) which rotates relay kicker (356) against the force of kicker spring (355). This rotation of kicker (356) engages trip screw (327) of

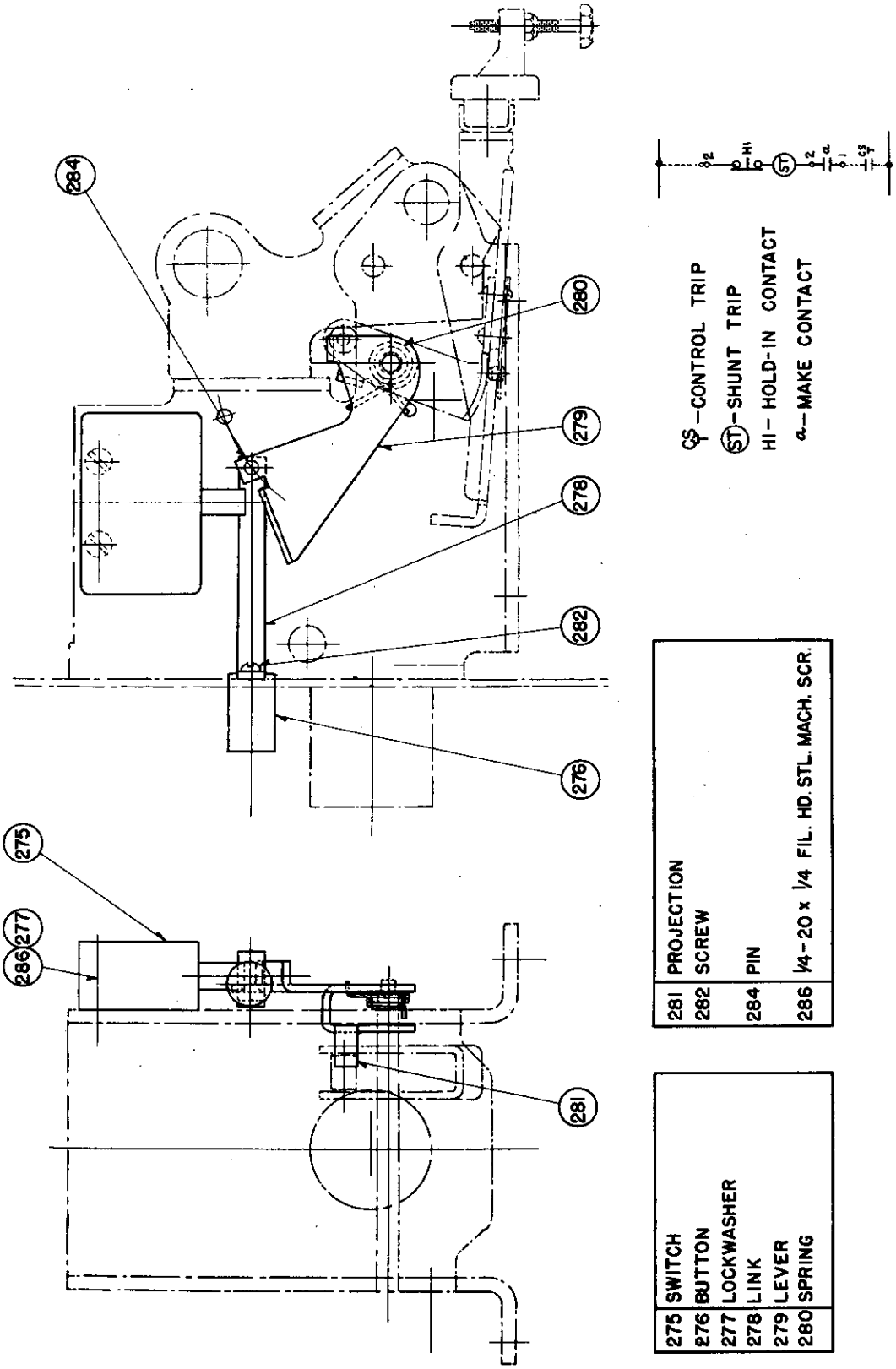

FIG. 5 — Hold-in Device

closing relay Fig. 7 and trips the relay. The closing coil is momentarily rated and serious damage will result if potential is allowed to remain on its terminals through improper adjustment of trip screw (327) of closing relay Fig. 7 so that the relay does not trip and interrupt closing coil circuit. When the moving core and operating arm have pushed the mechanism linkages to the closed and latched position, pin (227) Fig. 3 holds the moving core in the "closed gap position".

When the mechanism is tripped, pin (227) Fig. 3 falls allowing operating arm (343) and moving core (342) to fall with it.

REPLACEMENTS

To replace closing coil (347):

(a) Remove handle (166) and faceplate (155) Fig. 1.

(b) Remove trip bracket (359) and arm (348) by removing bolts (351).

(c) Remove anti-shock-close device (360) from side of closing magnet by removing 3 bolts.

(d) Disconnect closing coil leads from terminals 7 and 5 of terminal block (169) Fig. 1.
(e) Remove 4 bolts (350) and plate (346). Coil is now free to be replaced.

ANTI-SHOCK-CLOSE DEVICE

On electrically operated circuit breakers, the anti-shock-close device (360) is bolted to the side of the closing magnet. Arm (348) bolted to the bottom of moving core (342) operates cam (361) of the device. Otherwise the operation is identical with that described in Section D-6.

D-9. CLOSING RELAY (Electrically Operated Circuit Breaker)

Reference Fig. 7

FUNCTION

The closing relay is used on electrically operated circuit breakers only and is mounted on the under side of the breaker shelf to the left of the closing magnet. The relay has the function of closing and opening the closing coil circuit in electrical operation. Together with the shunt trip and the closing magnet, the closing relay enables the operator to control the circuit breaker electrically from a remote point by means of control switches.

DETAILED DESCRIPTION

The relay base (300) is molded from insulating material. The contact assemblies, coil assembly and other parts are attached to the base. Frame (305) serves as part of the magnetic circuit of coil (338) and also serves to hold the coil in place. This frame or yoke is fastened to the molded base by three screws (318). The coil (338) is wound on a molded spool (339) and is held in place by guide tube (337) which extends from the top of the molded base through the bottom of the frame (305) and through the center of the spool. At its upper end the guide tube (337) supports the stationary core (306) firmly in place against the frame.

The moving core (333) is free to slide up and down in the guide tube (337). In moving up in response to the magnetic pull from the stationary core when the coil is energized, the moving core pulls up latch (336) which is fastened with pin (335). When the coil (338) is energized, spring (334) bearing against latch (336) holds latch in such a position that it is hooked under latch pin (316) thus causing moving contact arm assembly (301) to rotate counterclockwise around contact arm pin (329), thereby compressing spring (312). The moving contacts (303) are thus pulled against the stationary contacts (304) completing the circuit. In Fig. 7 the moving core is shown in the upper or "contacts closed" position.

As soon as the contacts close, current starts flowing through the closing coil of the circuit breaker. The moving core (342) of the closing magnet, Fig. 6, moves up, closing the circuit breaker. Trip bracket (359) fastened to moving core moves up with it and when the circuit breaker is closed and latched the trip bracket (359) Fig. 6, strikes trip screw (327), which is fastened to release bracket (308), thereby rotating bracket (308) counterclockwise around pin (317) against the torque exerted by torsion spring (313). When release bracket (308) is rotated in this manner, it strikes the bottom of latch (336) rotating it counterclockwise around pin (335) against the force of spring (334). This rotation of latch (336) causes it to become disengaged from latch pin (316) and consequently spring (312) extends causing moving contact assembly (301) to rotate clockwise thereby snapping moving contacts (303) away from stationary contacts (304) and interrupting the circuits.

With the circuit breaker in the closed position, trip bracket (359) Fig. 6 on the moving core of the closing magnet holds trip screw (327) of the relay in the trip position. Therefore, even though the coil may be inadvertently

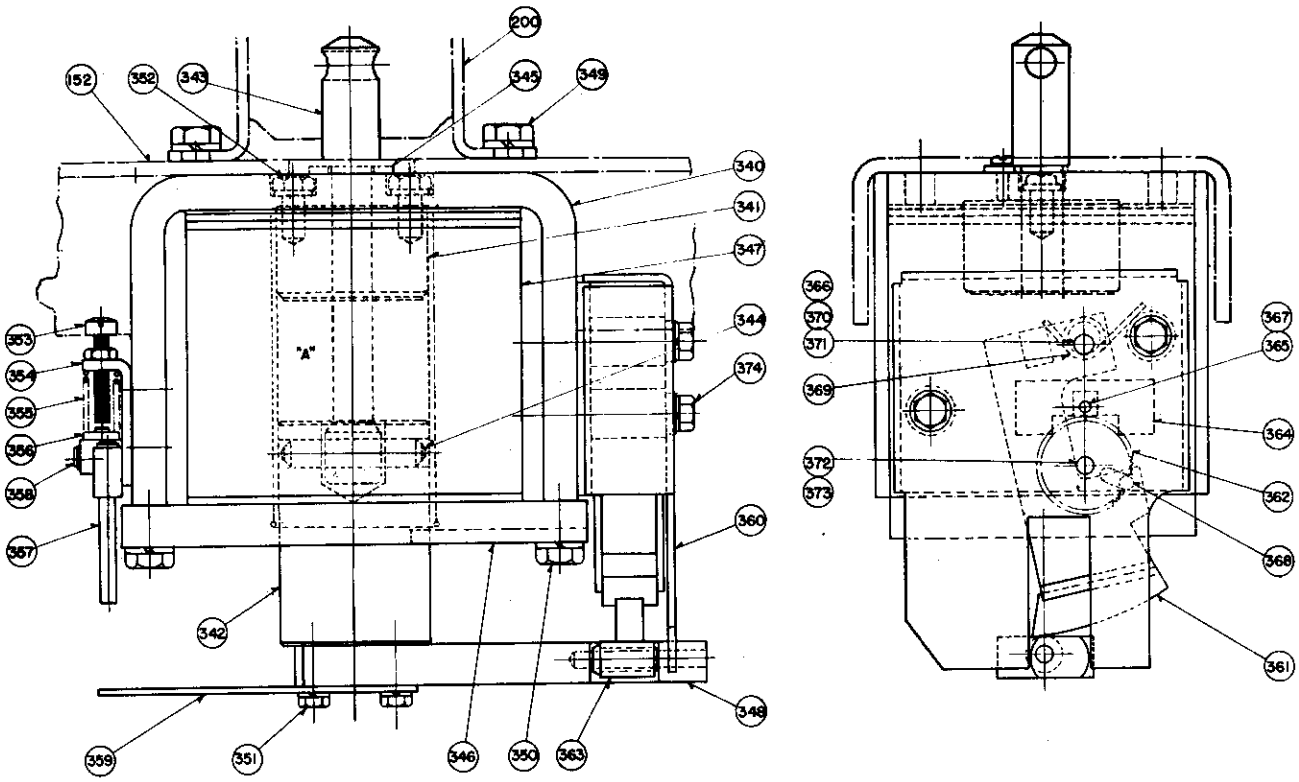

152	PLATFORM
200	MECHANISM
340	CLOSING MAGNET YOKE
341	STATIONARY CORE
342	MOVING CORE
343	OPERATING ROD
344	PIN
345	STOP
346	PLATE
* 347	COIL
348	ARM
349	BOLT
350	BOLT

351	BOLT
352	BOLT
353	ADJUSTING SCREW
354	BRACKET, CONTACTOR KICKER
* 355	SPRING
356	CONTACTOR KICKER
357	TRIP ROD
358	PIN
359	TRIP BRACKET
360	CASE OF ANTI-SHOCK CLOSE-DEVICE
361	CAM
362	WHEEL
363	ROLLER

364	OSCILLATOR
365	PIN
366	BRS. WASHER
367	TRUARC RING
368	PIN
* 369	SPRING, RESET
370	PIN
371	TRUARC RING
372	PIN
373	TRUARC RING
374	BOLT
	* SPARE PARTS

FIG. 6 — Closing Magnet

300	RELAY BASE	
301	MOVING CONT. ARM ASSY.	
*302	BLOWOUT MAGNET ASSY.	
**303	MOVING CONT. ASSY.	
*304	STAT. CONT. ASSY. R.H.	
305	FRAME	
306	STAT. CORE	
307	TERMINAL BRACKET	
308	RELEASE BRACKET	
309	COVER	
310	ARC CHAMBER	
311	TERM. CONN.	
*312	SPRING, CONTACT	
**313	SPRING, TRIP	
*314	SPRING, CONTACT ARM	
315	ELASTIC STOP NUT	
316	LATCH PIN	
317	RELEASE BRKT PIN	
318	¼-20X⅜ SCREW	
319	.190-32X⅜ SCREW	
320	.190X¼ BINDING HD. SCR.	
321	.164-32X⅜ PAN HD. SCR.	
322	.164-32X¾ PAN HD. SCR.	
*323	RESISTOR	
324	¼-20 x 4 FIL. HD. SCR.	
325	.190 STD. WASHER	
326	.190 STD. LOCKWASHER	
327	FINGER, TRIP	
329	CONTACT ARM PIN	
330	.190-32 x 2½ PAN HD. SCR.	
*331	STAT. CONT. ASSY. L.H.	
332	.190-32 NUT	
333	MOVING CORE	
*334	SPRING, LATCH	
335	PIN	
336	LATCH	
337	GUIDE TUBE	
*338	OPERATING COIL	
339	MOLDED SPOOL	

* SPARE PARTS

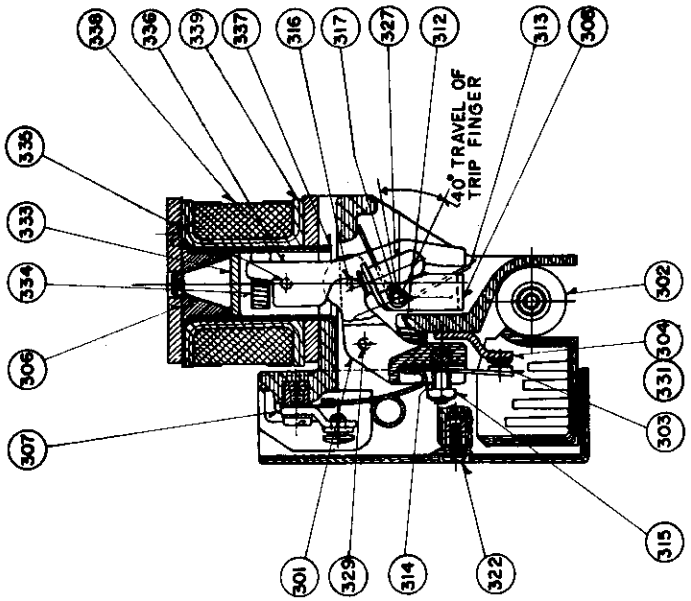

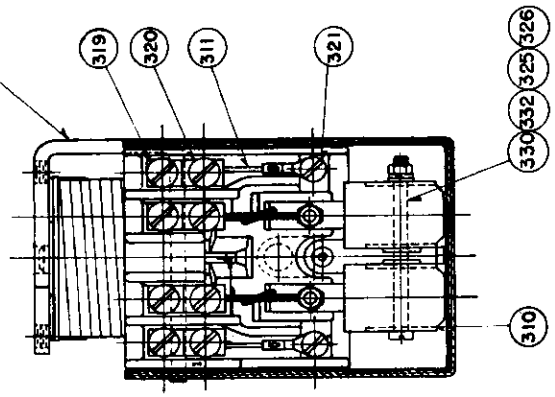

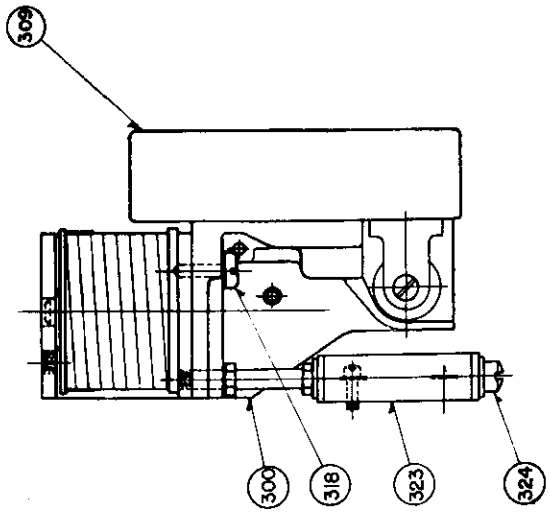

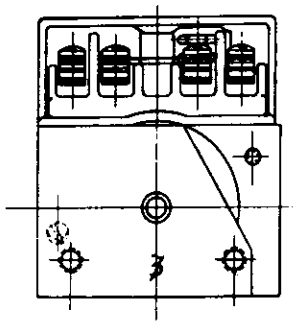

FIG. 7 — Closing Relay

energized when the circuit breaker is latched, the relay contacts will not close and no current will flow through the circuit breaker closing coil.

The moving contacts (303) are resiliently mounted by means of springs (314) around studs set into the moving contact arm (301) and are secured by elastic stop nuts (315). This causes a slight rolling and wiping action on the spherically shaped contact surfaces as they meet which helps to insure a positive electrical connection.

WIRING DIAGRAM

Reference Fig. 1D, 1E, 1F

When control switch C.S.C. Fig. 1D is closed relay coil X is energized from the control bus. This causes relay to close its contacts X1 and X2, Fig. 1E or 1F. The closing of these contacts energizes the closing coil directly in the case of D-C operated breakers of Fig. 1E, or through a Rectox dry disc rectifier in the case of a-c operated breakers shown in Fig. 1F.

Contact X2 is also connected in parallel with the control switch through a resistor in the contactor coil circuit. This "seal-in" feature means that, once energized, the relay will hold its contacts closed until it is tripped mechanically by the closing of the breaker.

Contacts X1 and X2 connected in series make and interrupt the closing coil circuit. An arc chamber (310) Fig. 7 molded from arc resisting material surrounds each pair of contacts. Each arc chamber is held in place by the two iron plates of its blowout magnet assembly (302). The two blowout magnet assemblies are held to the molded base by bolt and nut (330).

The blowout magnet coils are connected in series with the contacts and consequently flux is flowing through the magnetic circuits and across the air gaps of the blowout magnets at the time the contacts part and draw an arc. The magnetic circuits are so arranged that the air gaps are across the arc chambers and the arcs. The arcs are forced by magnetic action down into the arc chamber where they are extinguished due to the stretching and cooling process. This arrangement makes possible a small and efficient relay.

REPLACEMENT OF SPARE PARTS

DANGER!

Before working on the relay, make sure that the circuit breaker is open and that the upper and lower studs are dead. Make sure that control circuits are dead. Realize that control wiring may be "hot" even though the main circuit breaker studs are dead.

Before replacing parts of the relay, it is best to disconnect the wiring and remove it from the circuit breaker:

(a) Remove screw (322) and lift off molded cover (309) of the contactor thus exposing the four numbered terminals.

(b) Remove and tag the wires from the terminals.

(c) One lead from the contactor coil is connected to the terminal block. Remove front cover of terminal block and disconnect lead.

(d) Remove the two screws through the circuit breaker shelf (152) Fig. 1 which hold the relay to the shelf.

The relay is now free from the circuit breaker.

To replace relay coil:

(a) Remove screws holding coil frame (305) to molded base (300) and remove from base.

(b) Pull out guide tube (337), allowing stationary core to drop out. Coil is now free to be replaced.

To replace latch spring (334):

(a) Remove frame (305) as before.

(b) Lift out moving core assembly (333).

(c) Rotate latch clockwise as far as it will go. Spring will drop out. Replace.

To replace trip spring (313):

(a) Remove snap ring from one end of release bracket pin (317) and push pin out.

(b) Replace pin and new spring.

To replace moving contact arm assembly spring (312):

(a) Remove snap ring from one end of contact arm pin (329) and push pin out.

(b) This releases moving contact arm assembly (303) and spring (312) may then be replaced.

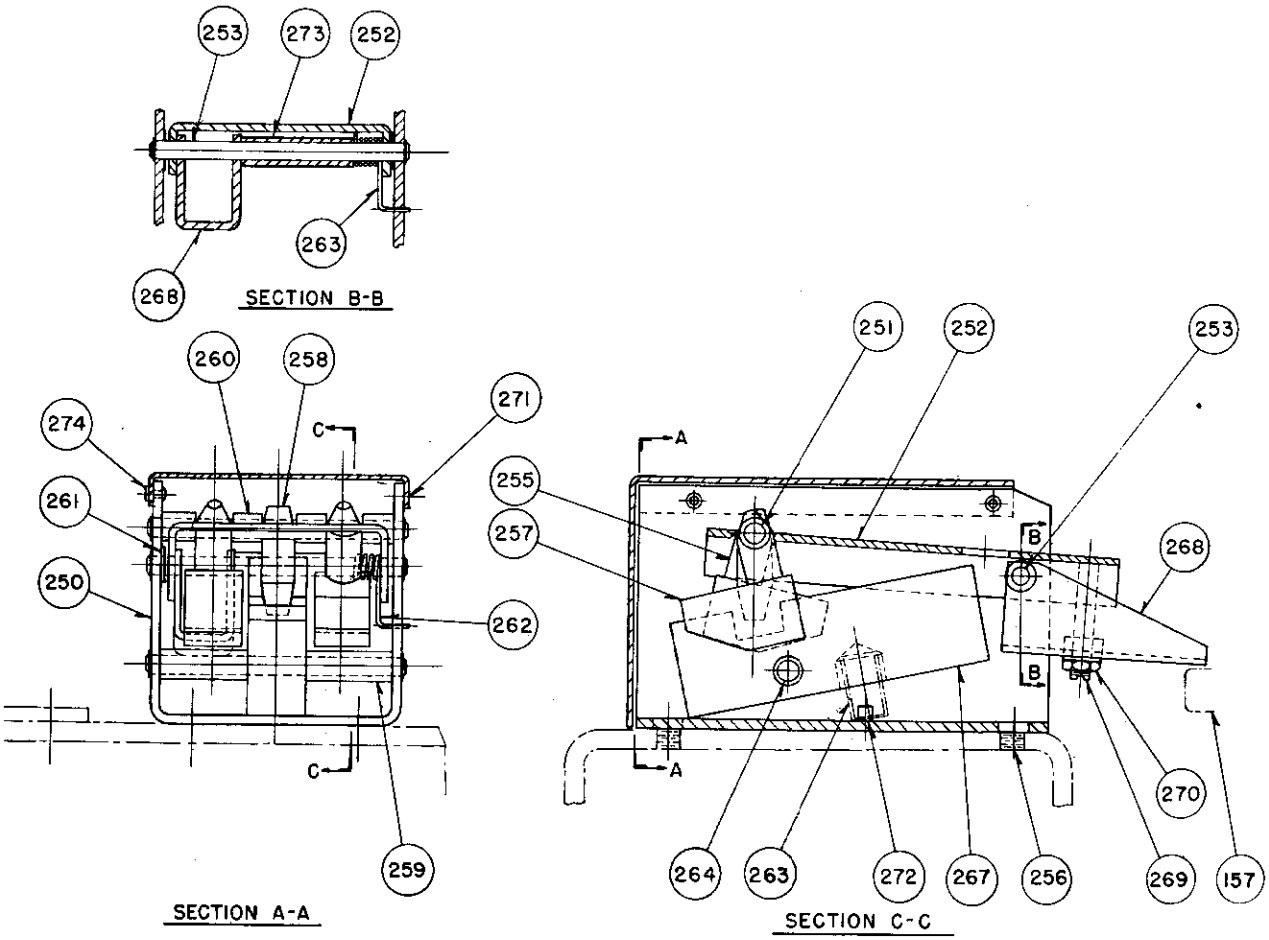

250	BRACKET, ANTI-SHOCK-OPEN	
251	PIN	
252	PLATE	
253	PIN	
255	STUD	
256	SCREW	
257	WEIGHT	
258	STUD	
259	SPACER	
260	SPACER	
261	WASHER	

*	262	SPRING, RESET
*	263	SPRING, WEIGHT
	264	PIN
	267	WEIGHT
	268	LEVER
	269	SET SCREW, 1/4-20 X 1 1/2 HEADLESS
	270	LOCKNUT, 1/4-20
	271	SCREW, .164-32 X 3/8 PAN. SEMS
	272	RIVET
	273	SPACER
	274	RIVET
	157	TRIP BAR

FIG. 8 — Anti-Shock—Open Device

To replace moving contact (303) or contact spring (314):

(a) Remove elastic stop nut (315) and replace spring (if necessary).

(b) If a moving contact is to be replaced, disconnect its lead from under the applicable terminal screw (319) and remove and replace.

To replace blowout magnet assembly.

(a) Remove leads of blowout coil.

(b) Remove bolt and nut (330) and replace blowout magnet assembly.

To replace stationary contact assembly:

(a) It will be necessary to remove blowout magnet assembly as outlined above.

(b) Remove the applicable screw (321) and replace contacts.

To replace resistor (323):

(a) Loosen screw (324) and replace.

D-10. ANTI-SHOCK-OPEN DEVICE

Reference Fig. 8

FUNCTION

This device prevents tripping of the circuit breaker due to rotation of the trip lever caused by shock but allows normal rotation of the trip lever by tripping devices.

DESCRIPTION

The bracket (250) is mounted on the supporting frame shelf to the immediate right of the operating mechanism frame (200) Fig. 1 and is held to the shelf by two screws (256). Plate (252) is pivoted on pin (253) as is lever (268). Lever and plate are connected by set screw (269) in such a way that if the trip bar rises, lever (268) rotates counterclockwise around pin (253) and plate (252) is caused to rotate in the same direction. Conversely, if plate (252) is restrained from rotating, trip bar is held down by lever (268). Under shock conditions, plate (252) is restrained from moving in the following manner:

Studs (255) and (258) are suspended on pin (251) and plate (252) is fitted with a slot in its end arranged so that the plate will slide down and allow the circuit breaker to trip under normal tripping impulses. Under shock conditions, however, the two outboard studs are caused to rotate around pin (251) due to the off-center weights (257), thus jamming the plate (252) from sliding down. The middle stud is actuated by a separately pivoted weight (267) which rotates about pin (264). Spring (262) serves to hold weight in position shown during normal operation.

REPLACEMENTS

To replace reset spring (262):

(a) Remove cover by removing screws (271).

(b) Remove device from shelf by removing two screws (256).

(c) Removal of pin (253) will allow spring (262) to be replaced.

To remove weight spring (263):

(a) Repeat (a) and (b) above.

(b) Removal of pin (264) will free weight (267) and allow weight spring (262) to be replaced.

D-11. SERIES OVERCURRENT TRIP DEVICE

Reference Fig. 9

FUNCTION

This device provides for selective protection of the various portions of the electrical system under three distinct conditions of current: First, for low overcurrent values, it will trip the breaker after a LONG TIME DELAY; second, for higher overcurrent values, it will trip the breaker after a SHORT TIME DELAY; and third, for still higher values of overcurrent, it will trip the circuit breaker instantaneously.

DESCRIPTION

The device is actuated by an electromagnet connected in series with the moving contact assembly and the lower stud of the circuit breaker. By turning adjusting knob (492), the series overcurrent trip device can be set to pick up the armature subject to LONG TIME DELAY at ampere settings corresponding to approximately 150%, 200% and 250% of trip coil rating. These three points are marked on the scale plate (493) in amperes. If the overcurrent continues above the set value for the long time delay period as determined by an oil displacement piston the circuit breaker will trip.

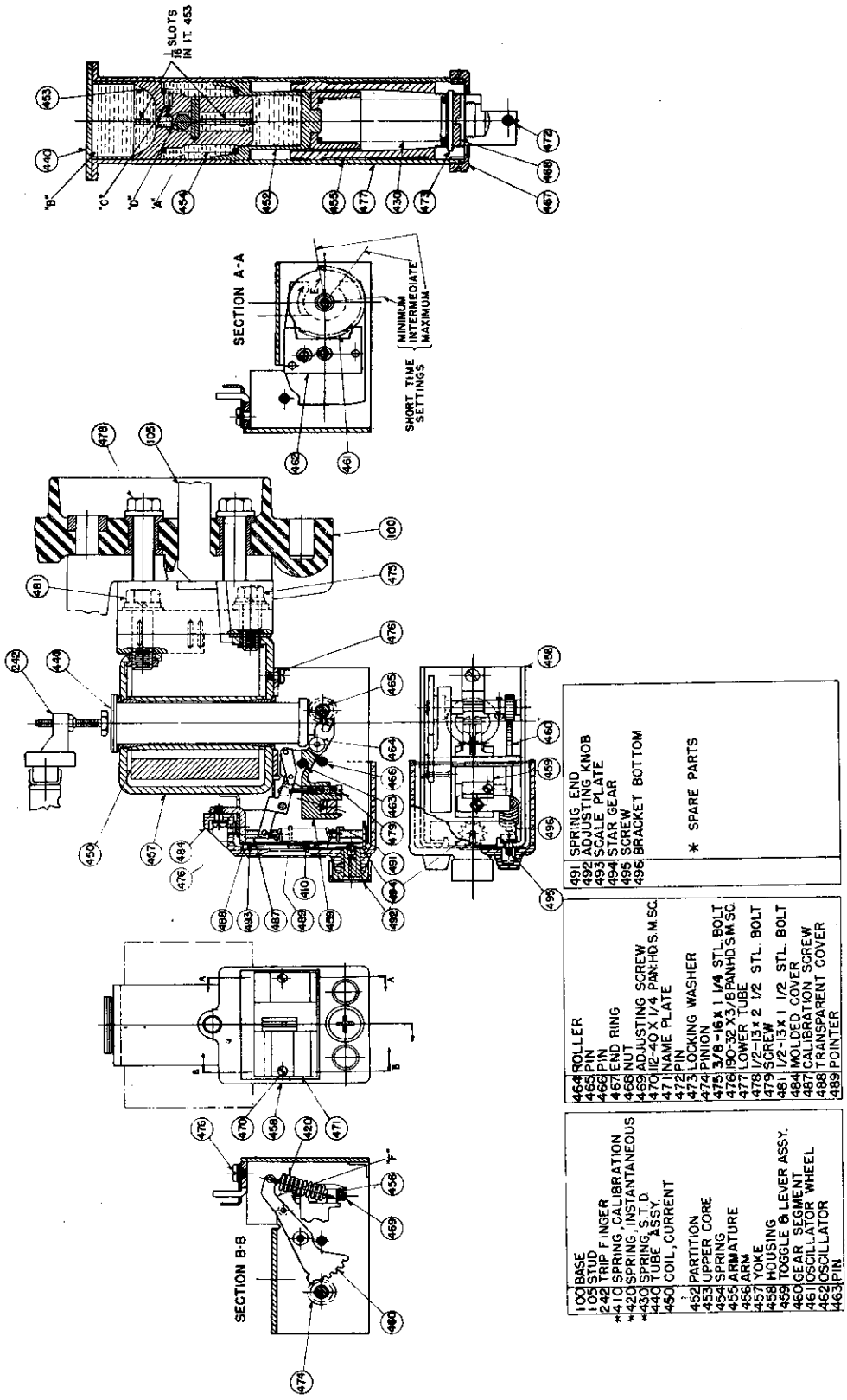

FIG. 9 — Series Overcurrent Trip Device

Some breakers have no long time delay features. In these cases, the upper core, upper core spring, and oil are omitted. The short time delay pickup calibration is marked on the scale plate at one point only.

Unlike the long time delay pickup, the SHORT TIME DELAY pickup calibration and operating time are set at the factory at the ampere setting marked on the nameplate, and are not readily adjustable in the field. The operating time is set on one of three different time settings: #1 (minimum), #2 (intermediate), or #3 (maximum) time (see typical time current curves Fig. 10). If an overcurrent occurs of greater magnitude than the short time delay pickup setting, the circuit breaker will trip subject to a short time delay as determined by a gear escapement mechanism without waiting for the longer time delay of the oil displacement piston.

Some breakers have long time delay and instantaneous features only with no short time delay. In these cases only two teeth are set on the oscillator for shock proofing purposes and the short time delay pickup becomes the instantaneous pickup.

The overcurrent trip device on the neutral pole of a 3 pole d-c breaker has long time delay only, with no short time delay or instantaneous features. In this case, a solid brass spacer is used inside of spring (430) to block the short time delay and instantaneous armature (455) from operating.

At currents above the instantaneous setting, the circuit breaker trips without any intentional time delay. The pickup setting is made at the factory from 5 to 30 times the series overcurrent trip coil rating and is not readily adjustable in the field.

If during the long or short time delay period the current drops to 100% of rated overcurrent trip coil current, the series overcurrent trip device will reset and the breaker will not trip provided the overcurrent has not persisted beyond the time indicated by the lower edge of the band curve for the particular breaker involved. If the current drops to a lower value than 100% of rated series coil current, the electrical reset time is increased in proportion. Fig. 10 gives examples of typical time current characteristics of circuit breaker installations aboard ship.

LONG TIME DELAY

Moving core assembly consists of a sealed enclosed tube assembly (440), consisting of an upper core (453), and upper core spring (454), an armature (455), a short time delay spring (430), and a lower tube (477). Space "A" is filled with a special fluid having a high viscosity.

With an overcurrent less than the pickup setting of the short time delay device, upper core (453) remains in a fixed position relative to yoke (457), due to magnetic attraction between core and yoke through the tube wall, but armature (455) moves upward in response to the magnetic pull between it and the upper core. Since the magnitude of the current is not sufficient to compress the short time delay spring (430), tube assembly (440) also moves upward with armature (455), forcing the liquid from space "A" to space "B" through orifice "C" in upper core (453). After tube (440) trips the breaker, the tube falls to its lower position carrying core (453) along with it. Then spring (454) returns the upper core (453) to its normal position, forcing the liquid back from space "B" to space "A" through a quick reset check valve "D".

SHORT TIME DELAY

The pin (472) in armature (455) is attached to a mechanical escapement device enclosed in housing (458). This device consists of a lever (459) pivoted on a fixed pin (463) and connected through instantaneous spring (420) to gear segment (460) which operates pinion (474) and oscillator wheel (461) which is on the same shaft. Oscillator wheel (461) is impeded from free rotation by oscillator (462).

With overcurrents of sufficient magnitude to compress short time delay spring (430) but not sufficient to extend instantaneous spring (420), armature (455) moves upward rotating lever (459) counterclockwise to operate the mechanical device; also roller (464) which is a part of lever (459) bears against the end ring (467), which is a part of tube assembly (440), to raise it and trip the breaker. Upper core (453) is carried along with tube (452) as the liquid does not have time to flow from space "A" to space "B".

INSTANTANEOUS TRIP

With fault currents of sufficient magnitude to extend instantaneous spring (420), the operation is identical with the above except that the upward motion of armature (455) is not restrained by oscillator (462) due to the extension of instantaneous spring (420).

ADJUSTMENTS

CAUTION: Although the overcurrent trip device is insulated, avoid making adjustments

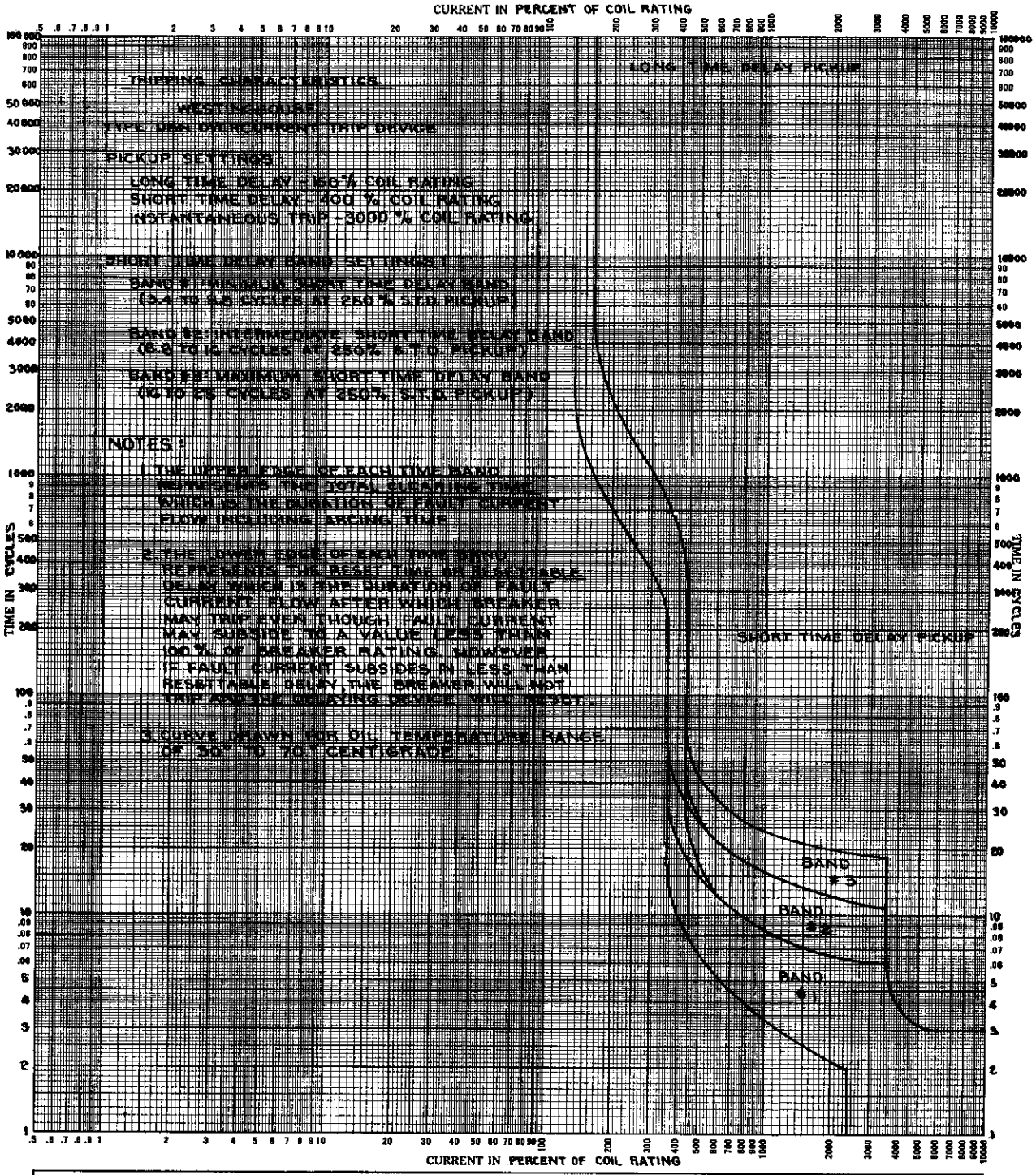

FIG. 10 — Time vs. Current Calibration Curves

while breaker is energized unless absolutely necessary. The only adjustment that can be made while the breaker is energized is the long time delay pickup adjustment.

To change the pickup current setting of the long time delay device, turn adjusting knob (492) so that indicator points to desired current setting.

To change the pickup current setting of the short time delay device,it is necessary to change short time delay spring (430).

(a) Remove bolts (478) from the back of panel and remove the trip device. Remove bolts (481) and (475).

(b) Remove screw (495) and 4 screws (476) and remove molded cover (484). Drop the housing (458) from the yoke assembly (457).

(c) Remove locking ring and unscrew end ring (467) to free spring (430). Replace with a spring having the desired pickup current characteristics. This spring must have been previously tested and tagged at the factory. Care must be taken to make sure the prongs of locking washer (473) fit into slots of armature (455).

(d) Nut (468) can be used to secure minor variations in pickup current. Turning the nut in compresses the spring and consequently increases the pickup current; turning the nut out reduces the pickup current. The nut should always be turned in half-turn steps so it will lock itself.

To change the short time delay band:

(e) Perform (a) and (b) above, push segment (460) with a thin screw driver at "F" in direction shown by arrow to disengage pinion (474) from segment (460). Turn gear pinion (474) one tooth clockwise to increase the short time delay and one tooth counterclockwise to decrease the time delay. If a closer adjustment is wanted turn screw (479) in to increase time delay and out to decrease the short time delay. This screw (479) must be locked in place by pin pricking the casting (459) near the screw.

To change the instantaneous trip current pickup:

(f) Perform (a) and (b) above, remove screw and nut (469) unhook spring (420) from arm (456) and segment (460) and replace with new spring having the desired pickup current characteristics. Minor variations in instantaneous pickup may be obtained by turning screw (469) in and out. Turning screw in increases the pick-up and turning the screw out decreases the pickup current. This screw must be locked by pin pricking arm (456) near it. Elastic stop nut on the end of this screw must be loosened before adjustment.

REPLACEMENTS

To replace short time delay spring (430): Proceed as described under Adjustments (a), (b), (c) and (d).

To replace instantaneous spring (420): Proceed as described under adjustments (f).

To replace calibration springs (410): Remove molded cover and scaleplate (493), and unhook the upper end of the springs (410). The lower ends can then be worked off the indicator and the springs replaced.

NOTE: Any adjustments or replacements on the overcurrent attachment should be regarded as temporary pending recalibration or replacement of the complete overcurrent attachment. Adjustments of the short time delay time and the instantaneous pickup setting are not recommended unless absolutely necessary.

D-12. AUXILIARY SWITCH

Reference Fig. 11

FUNCTION

The auxiliary switch is used to close or open auxiliary or control circuits. The closed or open positions of its sets of contacts are coordinated with the closed or open position of the main circuit breaker contacts.

DESCRIPTION

The four pole type RC auxiliary switch is mounted on the top of the supporting frame shelf to the left of the operating mechanism. It is operated by shaft (555) and arm (557) which connects to the closing lever (207) of the operating mechanism (200).

The contacts are designed to carry 15 amperes continuously or 250 amperes for three seconds.

The INTERRUPTING CAPACITIES of the auxiliary switch contacts are as follows:

Volts	Non-Inductive Circuit	Inductive Circuit
125 DC	11 Amps.	6.25 Amps.
250 DC	2 Amps.	1.75 Amps.
115 AC	75 Amps.	15.0 Amps.
450 AC	25 Amps.	5.0 Amps.

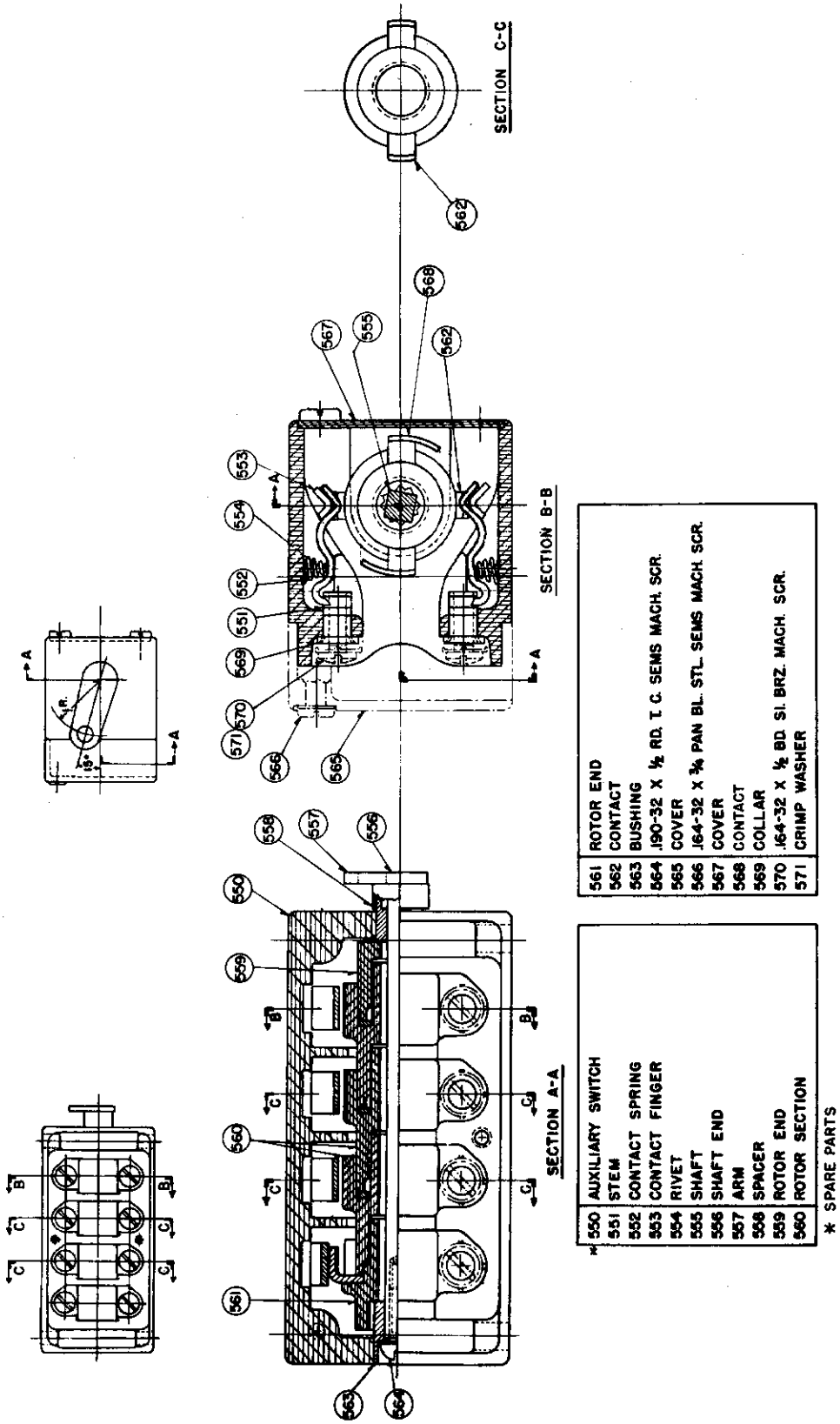

FIG. 11 — Auxiliary Switch

For the purposes of this table, and "inductive" circuit is considered to be a bell alarm or shunt trip circuit and a "non-inductive" circuit is considered to be an indicating light or similar circuit.

The auxiliary switch is a shaft-operated, rotary type having "a" and "b" contacts. An "a" contact is one that is open when the circuit breaker is open, and a "b" contact is one that is closed when the circuit breaker is open. Each circuit breaker is supplied with two 4 pole auxiliary switches unless otherwise specified. See Fig. 1 for typical wiring diagrams.

A square shaft (555) extends through the rotor sections (560) which in turn insulate and support the rotor contacts (562). The rotor assembly is clamped together into a solid unit by screw (564). The rotor contacts are set 90° apart for 90° rotation of shaft (555).

Contact fingers (553) have one end hooked into stem (551) with spring (554) maintaining pressure between the finger contact and stem. The center of the contact finger bears against a stop surface in casing (550) to position the outer end of the contact finger.

REPLACEMENT OF AUXILIARY SWITCH

(a) Remove and tag the terminal connections.

(b) Disconnect link (557) from closing lever, (207) Fig. 3, remove the two mounting bolts and remove switch.

(c) Remove link (557) from old switch and add to new switch.

D-13. SHUNT TRIP DEVICE

Reference Fig. 12

FUNCTION

The shunt trip device serves as a means of tripping the circuit breaker from some remote point by the closing of a control switch or relay contacts at that remote point.

DESCRIPTION

The shunt trip device is mounted to the left of the mechanism (200) Fig. 1 on the supporting frame shelf. It consists of a frame, coil and moving core mounted horizontally. Energizing trip coil (513) causes a magnetic attraction between stationary core (503) and moving core (504) which causes moving core (504) to move to the left rotating trip lever (501) about pin (502). Lever (501) raises trip bar (157) Fig. 1 to trip the circuit breaker. The opening of the circuit breaker de-energizes the shunt trip coil through an "a" contact of the auxiliary switch. See Section D-12. Spring (508) returns moving core (504) to its normal position. Non-magnetic washer (510) prevents residual magnetism from holding the cores together when the coil is de-energized.

REPLACEMENTS

To replace coil (513):

(a) Disconnect the shunt trip leads from the auxiliary switch and the cut-off switch.

(b) Take out the two bolts (515) and remove the shunt trip assembly from the supporting frame.

(c) Remove pin (502) and screws (509) holding plate (505) in place and drop out the moving core (504), stationary core (503) and sleeve (507). The coil is then free to be replaced.

To replace spring (508):

(a) Repeat operations (a) and (b) above.

(b) Remove pin (502) and replace spring (508).

D-14. REVERSE CURRENT TRIP DEVICE (D-C Circuit Breaker)

Reference Fig. 13

FUNCTION

This device has application on direct current breakers only. It will instantaneously trip the circuit breaker when the current flows in its series coil in the reverse direction and exceeds the calibration setting. This device is set and marked in amperes, at the factory, at either 5 or 10 percent of the rated continuous current of the circuit breaker overcurrent trip coils.

DESCRIPTION

This device (600) is mounted on the center insulating base of a two pole breaker and the top terminal of its current coil is connected to the upper stud (120) of the circuit breaker. A copper connector (634) connects the upper stud to the lower stud of the right hand pole. Thus the series coil (624) of the reverse current trip device is connected in series with the right hand pole overcurrent trip coil.

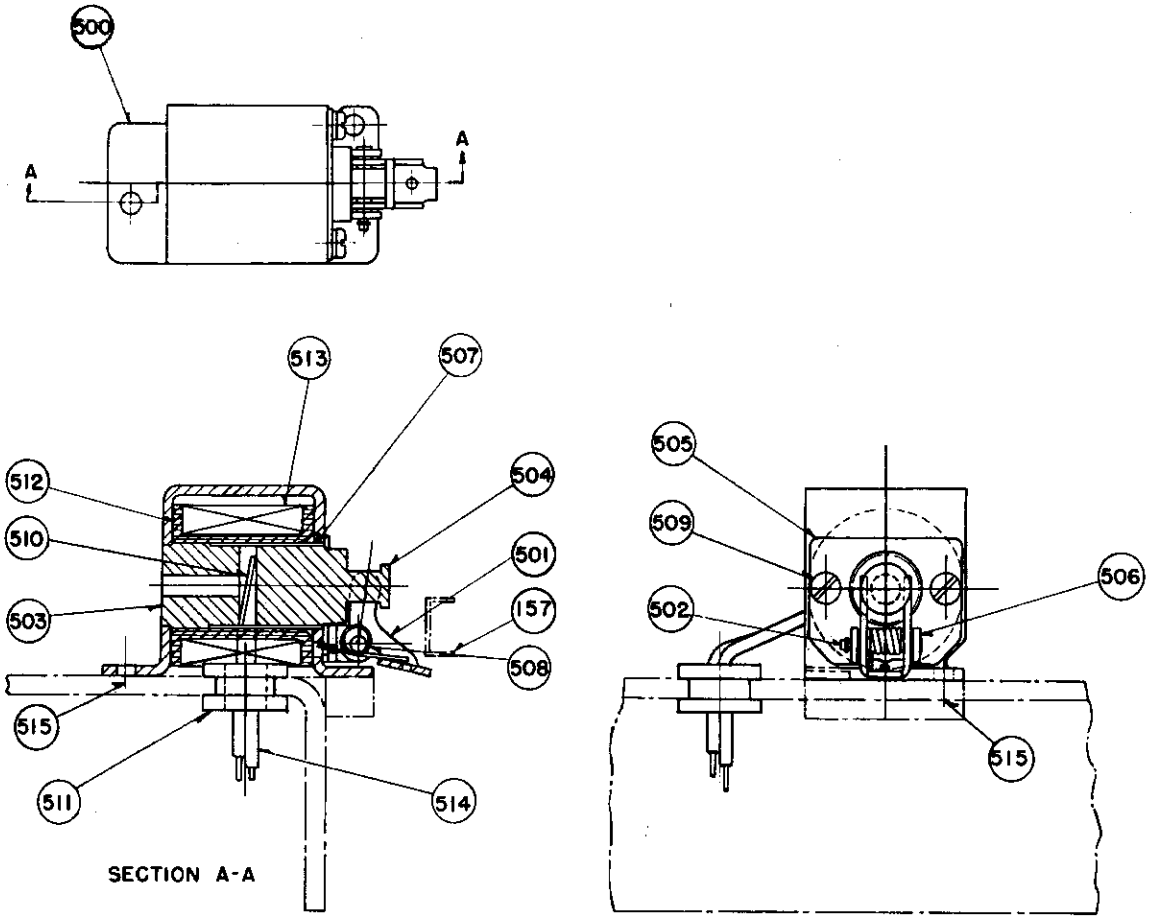

	500	SHUNT TRIP FRAME
	501	TRIP LEVER
	502	PIN
	503	STATIONARY CORE
	504	MOVING CORE
	505	PLATE
	506	BRACKET
	507	SLEEVE
*	508	SPRING, RESET
	509	SCREW
	510	WASHER
	511	BUSHING
	512	COIL SPOOL
*	513	COIL
	514	LEADS
	515	BOLTS
	157	TRIP BAR

* SPARE PARTS

FIG. 12 — Shunt Trip Device

100	MOLDED BASE
105	LOWER STUD
600	YOKE
601	POLE PIECE
602	BEARING CASTING
603	ARMATURE
604	LUG
605	TRIP LEVER
606	LINK
607	BAND
608	ARM
609	LOCKING PIECE
610	CORE
611	5/16-18 X 3 1/4 FLAT HD.STL.MACH.SCREW
* 612	SPRING, CALIBRATION
613	CALIBRATION SCREW
614	1/4-20 SET SCREW

617	PIN
618	190-32 X 1/2 PAN STL.SEMS MACH.SCR.
619	PIN
620	PIN
621	PIN
622	PIN
* 623	COIL, POTENTIAL
624	COIL, SERIES
625	TUBE
626	1/2-13 x 2 1/2 HEX. STL. BOLT
627	1/2-13 x 1 1/2 HEX. STL. BOLT
628	3/8-16 x 1 1/4 HEX. STL. BOLT
629	CONNECTOR
630	CONNECTOR
	* SPARE PARTS

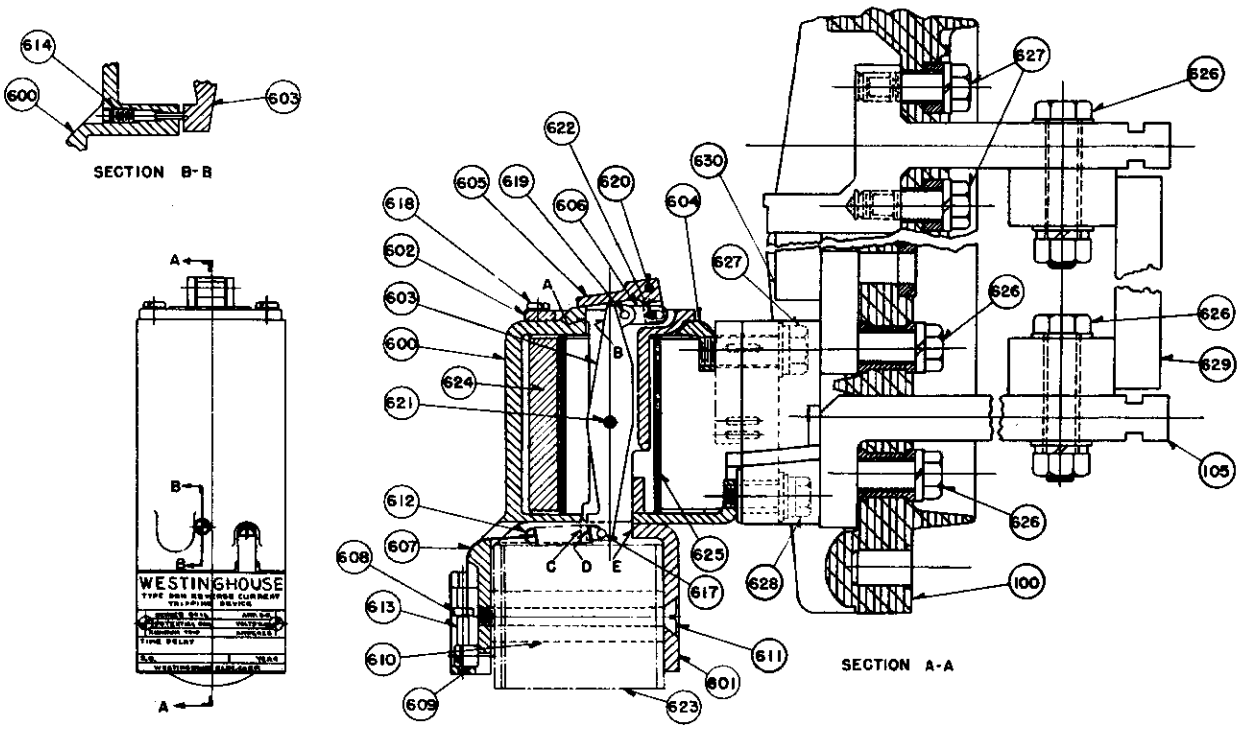

FIG. 13 — Reverse Current Trip Device

A three pole breaker with reverse current protection requires a larger panel as can be seen by an examination of the dimension plan Section A-2. In this case a molded base (100) is mounted to the right of the three poles and the reverse current device is mounted on this molded base. It is connected in series with the right hand pole series overcurrent trip device in the same manner as on the two pole breaker.

The potential coil (623) is connected directly across the line through an "a" contact of the auxiliary switch as shown in Fig. 1. This demagnetizes the armature (603) when the breaker trips on a reverse current and permits calibration spring (612) to reset it.

The main structural parts of the device consist of a yoke (600), a pole piece (601), a core (610) and an armature (603), all of magnetic steel. Bearing casting (602) of non-magnetic material is drilled for pin (621) about which armature (603) has a limited freedom of rotation. If armature (603) rotates counterclockwise, it pulls pin (619) and link (606) with it. After link (606) has traveled some distance, the slot in its end engages pin (622) of trip lever (605) and moves it to the left. This causes trip lever (605) to rotate clockwise about fixed pin (620) in bearing casting (602). This rotation causes the trip lever (605) to move trip screw (243) up thus causing the circuit breaker to trip. Slot in link (606) is to enable armature (603) to gain momentum before picking up the trip load.

Each of the coils of the device, the potential coil (623) and the series coil (624), has its own magnetic circuit. With forward current flowing in series coil (624), pole B is a south pole, say, and pole A is a north pole. At the bottom of the magnetic circuit of series coil (624), pole D is a north pole and pole C is a south pole as far as the series coil magnetic circuit is concerned. In the potential coil magnetic circuit, pole E is a north pole and pole C is a south pole as far as the potential coil magnetic circuit is concerned. It can be seen that under the circumstance of forward current flow in the series coil, the magnetic pull between unlike poles C and D will hold armature (603) immobile since pole C is a strong south pole due to flux from both coils while pole D is a north pole due to flux of series coil.

When the current in series coil (624) reverses, poles A and B change their polarity to south and north respectively, and pole D changes to a south pole. Since pole E is still a north pole due to the potential coil, there is now an attraction between poles D and E where repulsion existed before Pole C is still a south pole as far as the potential coil is concerned but has become a north pole with respect to the series coil. The net result is that pole C becomes very weak and as soon as the attraction between unlike poles A and B and the attraction between unlike poles D and E becomes strong enough to overcome the tension in calibration spring (612), the armature rotates counterclockwise and trips the circuit breaker as described before.

This device is set at the factory and should not be tampered with in the field. However, it may be necessary to make a field adjustment in case calibration spring (612) has been replaced.

(a) Remove two screws in nameplate and remove nameplate from device.

(b) Remove locking piece (609).

(c) Calibration screw (613) has a square cross section and may be turned with a small wrench. Turning screw (613) so that arm (608) moves down increases the calibration setting of the device and turning it the other direction decreases the setting. The screw should be set so that the amount of reverse current indicated on the nameplate will just trip the circuit breaker.

REPLACEMENTS

To replace calibration spring (612):

(a) Calibration spring (612) can be easily replaced after removing the device from the circuit breaker. It is accessible without removing other parts.

To replace potential coil (623):

(a) Disconnect wiring from terminal 4 of the auxiliary switch and from the bus as shown in wiring diagram Fig. 1.

(b) Remove unit from the circuit breaker by removing bolts (626).

(c) Removing screw (611) frees the potential coil for replacement.

NOTE: Any field adjustment of this device should be regarded as temporary pending recalibration at the factory.

D-20. SPARE PARTS

See Certification Data for List of Spare Parts