NAVSHIPS 362-2067

PART II CHAPTER 2

OF

SWITCHBOARD INSTRUCTION BOOK

NAVY TYPE ACB

600-AMPERE FRAME SIZE

(STANDARDIZED DIMENSIONS)

AIR CIRCUIT BREAKER

WESTINGHOUSE TYPE DBN-40

WESTINGHOUSE ELECTRIC CORPORATION
EAST PITTSBURGH, PA., U.S.A.
INSTRUCTION BOOK 35-224-C1

BUREAU OF SHIPS • NAVY DEPARTMENT • SEPTEMBER, 1951

INDEX

AIR CIRCUIT BREAKER
Navy Type ACB (Westinghouse Type DBN-40)
600 Amp. Frame Size
40,000 Amp. A-c and 25,000 Amp. D-c Interrupting Capacity
Westinghouse Electric Corp. Drawing 48-J-800
Buships Plan S6202-3,001,902

Description	Page
SECTION A - INTRODUCTION	1
A-1. List of Illustrations and Calibration Curves	1
A-2. Circuit Breaker Dimension Plan (14-B-7076)	3
SECTION B - GENERAL INFORMATION	5
B-1. Manually Operated Circuit Breaker	5
B-2. Electrically Operated Circuit Breaker	7
SECTION C - OPERATION AND MAINTENANCE	7
Caution	7
Wiring	7
Calibration	7
Shunt Tripping	7
Electric Closing	9
Maintenance	9
SECTION D- COMPONENTS AND ATTACHMENTS	9
D-1. General Assembly (Manually Operated Breaker)	9
D-2. General Assembly (Electrically Operated Breaker)	9
D-3. Arc Chutes	9
D-4. Contact Assembly	10
D-5. Mechanism	11
D-6. Anti-Shock-Close Device	13
D-7. Hold-in Device	15
D-8. Closing Magnet (Electrically Operated Breaker)	15
D-9. Closing Relay (Electrically Operated Breaker)	19
D-10. Anti-Shock-Open Device	21
D-11. Series Overcurrent Trip Device	21
D-12. Auxiliary Switch	26
D-13. Shunt Trip Device	28
D-14. Reverse Current Trip Device (D-c Circuit Breaker)	30
D-20. Spare Parts	33

SECTION A—INTRODUCTION

A-1. List of Illustrations and Calibration Curves

FIG. NO.	Westinghouse Ref. Dwg.	TITLE	PAGE
1	31-A-2607	General Assembly	4
2	22-B-7235	Wiring Diagrams	6
3	31-A-2606	Arc Chute and Contact Assembly	8
4	31-A-2608	Mechanism	12
5	22-B-1624	Anti-Shock-Close Device	14
6	22-B-1623	Hold-in Device	16
7	31-A-2610	Closing Magnet	17
8	31-A-2609	Closing Relay	18
9	22-B-1622	Anti-Shock-Open Device	22
10	32-A-6812	Series Overcurrent Trip Device	23
11	351775	Time vs Current Calibration Curves	25
12	31-A-2612	Auxiliary Switch	27
13	22-B-1625	Shunt Trip Device	29
14	31-A-2614	Reverse Current Trip Device	31

A-2. Circuit Breaker Dimension Plan

	W.E. CORP. PLAN	BU SHIPS PLAN	TITLE
1.	14-B-7076	S-6202-2273	Standard Outline For Navy Type ACB 600 Amp. Frame Size

This plan gives the standard dimensions of Navy Type ACB 600 amp. frame size air circuit breakers of which the DBN-40 is the Westinghouse Electric Corporation representative.

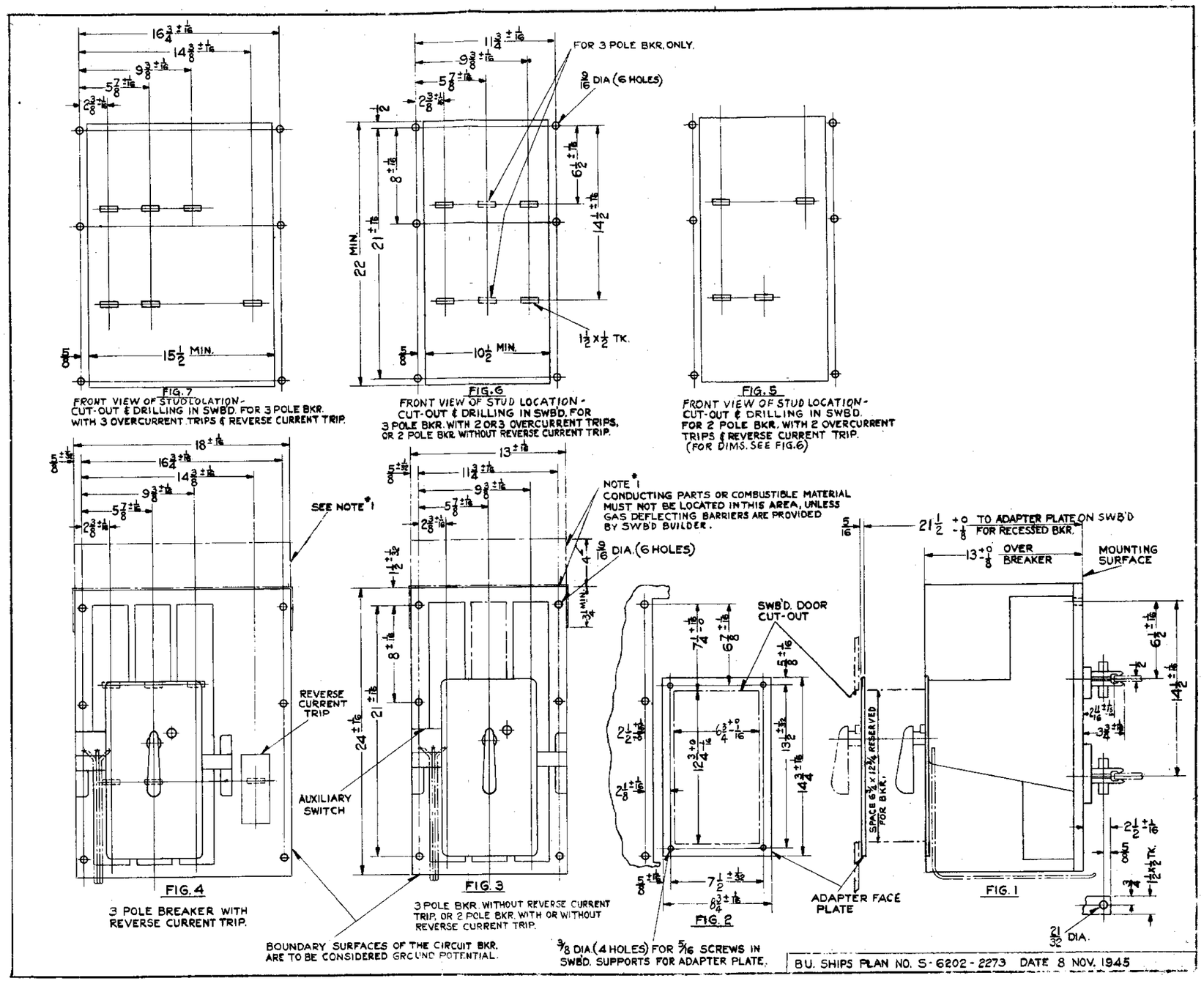
FIG. 7
FRONT VIEW OF STUDLOCATION - CUT-OUT & DRILLING IN SWB'D. FOR 3 POLE BKR. WITH 3 OVERCURRENT TRIPS & REVERSE CURRENT TRIP.
FIG. 6
FRONT VIEW OF STUD LOCATION - CUT-OUT & DRILLING IN SWB'D. FOR 3 POLE BKR. WITH 2 OR 3 OVERCURRENT TRIPS, OR 2 POLE BKR. WITHOUT REVERSE CURRENT TRIP.
FOR 3 POLE BKR. ONLY.
9/16 DIA (6 HOLES)
1 1/2 X 1/2 TK.
FIG. 5
FRONT VIEW OF STUD LOCATION - CUT-OUT & DRILLING IN SWB'D. FOR 2 POLE BKR. WITH 2 OVERCURRENT TRIPS & REVERSE CURRENT TRIP. (FOR DIMS. SEE FIG. 6)
SEE NOTE *1
REVERSE CURRENT TRIP
AUXILIARY SWITCH
FIG. 4
3 POLE BREAKER WITH REVERSE CURRENT TRIP.
NOTE *1
CONDUCTING PARTS OR COMBUSTIBLE MATERIAL MUST NOT BE LOCATED IN THIS AREA, UNLESS GAS DEFLECTING BARRIERS ARE PROVIDED BY SWB'D BUILDER.
9/16 DIA. (6 HOLES)
FIG. 3
3 POLE BKR. WITHOUT REVERSE CURRENT TRIP, OR 2 POLE BKR. WITH OR WITHOUT REVERSE CURRENT TRIP.
SWB'D. DOOR CUT-OUT
FIG. 2
ADAPTER FACE PLATE
SPACE 6 3/4 X 12 3/4 RESERVED FOR BKR.
21 1/2 +0 -1/8 TO ADAPTER PLATE ON SWB'D FOR RECESSED BKR.
13 +0 -1/8 OVER BREAKER
MOUNTING SURFACE
FIG. 1
21/32 DIA.
BOUNDARY SURFACES OF THE CIRCUIT BKR. ARE TO BE CONSIDERED GROUND POTENTIAL.
3/8 DIA. (4 HOLES) FOR 5/16 SCREWS IN SWB'D. SUPPORTS FOR ADAPTER PLATE.
B.U. SHIPS PLAN NO. S-6202-2273 DATE 8 NOV. 1945

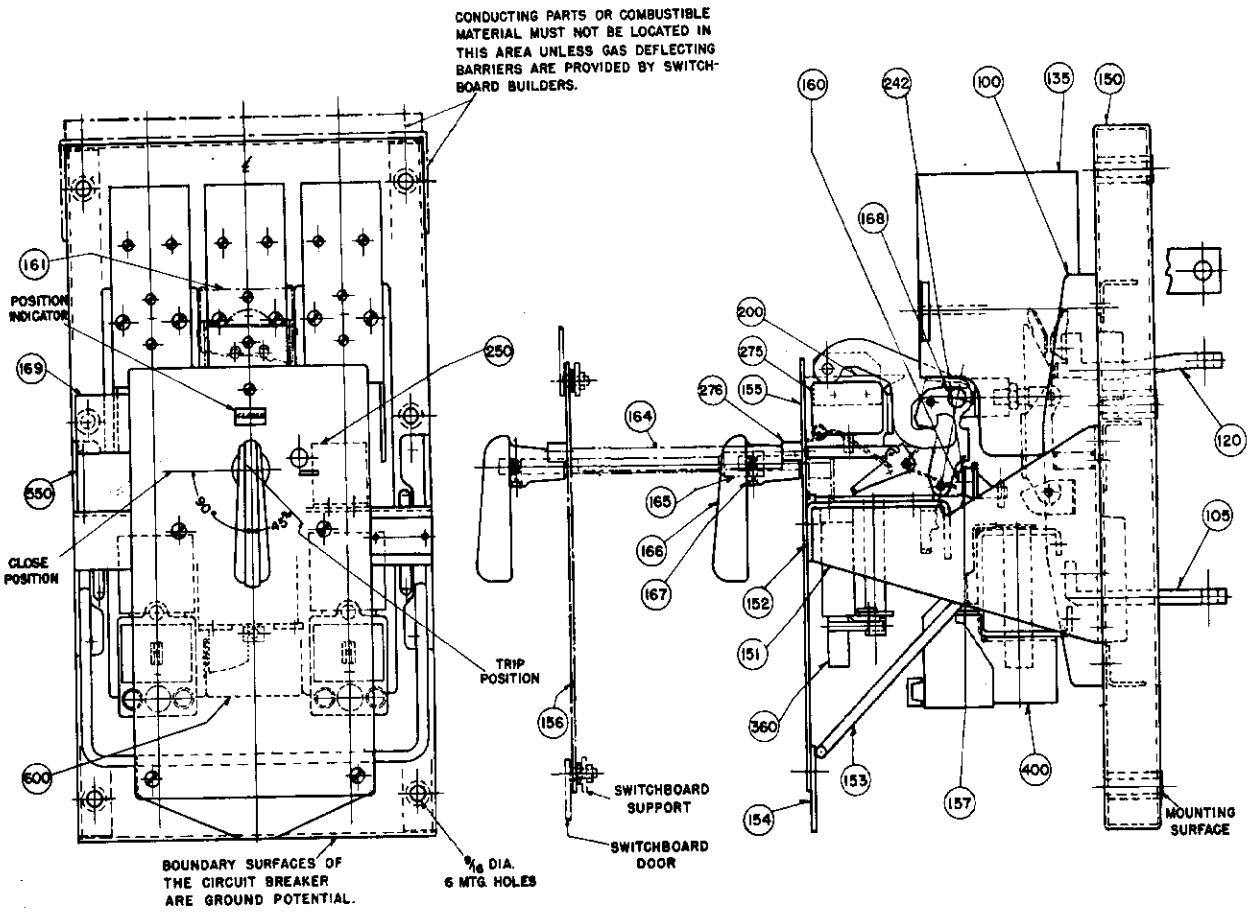

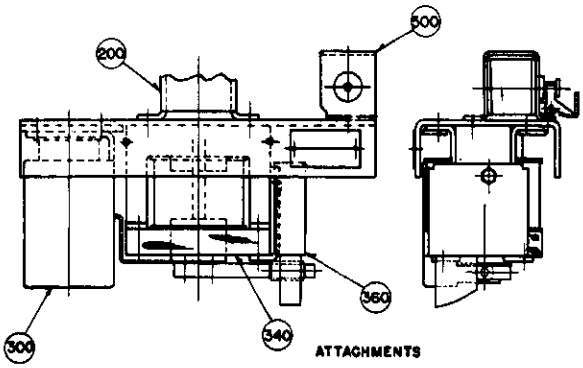

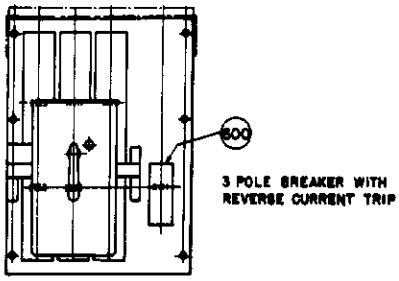

100	MOLDED BASE
105	LOWER STUD
120	UPPER STUD
135	ARC CHUTE
150	STEEL PANEL
151	BRACKET
152	SHELF
153	BRACE
154	PLATE
155	FACE PLATE
156	ADAPTER PLATE
157	TRIP BAR
160	ELASTIC STOP NUT
161	POLE COVER
164	HOLD-IN EXTENSION
165	HANDLE EXTENSION
166	OPERATING HANDLE
167	5/16-24 SET SCREW
168	CROSSBAR
169	TERMINAL BLOCK

200	MECHANISM
242	TRIP FINGER
250	ANTI-SHOCK-OPEN DEVICE
275	CUT OFF SWITCH
276	HOLD-IN BUTTON
300	CLOSING COIL CONTACTOR
340	CLOSING MAGNET
360	ANTI-SHOCK-CLOSE DEVICE
400	OVERCURRENT TRIP
500	SHUNT TRIP DEVICE
550	AUXILIARY SWITCH
600	REVERSE CURRENT TRIP

Figure 1 — General Assembly

SECTION B — GENERAL INFORMATION

B-1. MANUALLY OPERATED CIRCUIT BREAKER

The DBN-40 air circuit breaker is a sturdy, compact piece of shipboard electrical equipment consisting of a rigid steel chassis to which are bolted the several sub-assemblies which make up the complete circuit breaker. For example, the mechanism, pole units, arc chutes, overcurrent trip devices and other attachments are each complete within themselves and are readily interchangeable between breakers. They may be removed intact and replaced if necessary with minimum outage time.

The DBN-40 is a type ACB air circuit breaker of 600 ampere frame size. Its interrupting and continuous current ratings are as outlined in the following table:

INTERRUPTING RATING

500V. 60 Cycle A-C R.M.S. Amperes A-C	250V. D-C Maximum Amperes D-C
40,000	25,000

CONTINUOUS CURRENT RATING

Circuit Breaker Copper Rating Amperes	Overcurrent Trip Coil Ratings Amperes	
640	40	250
	50	320
	80	400
	100	480
	160	560
		640

The chassis of the DBN-40 air circuit breaker consists of a rigid steel panel (150) Fig. 1 on the front of which is bolted a supporting frame consisting of a bracket (151) which in turn supports shelf (152), brace (153), plate (154) and faceplate (155). A separate pole unit (100) is bolted to the steel panel for each pole. A three pole breaker is illustrated in Fig. 1. A two pole breaker would have the same general appearance but the center pole unit would be omitted and the panel cutouts would be covered by pole cover (161). The base of each pole unit is molded from insulating material. When supplied, the series overcurrent trip devices (400) and the reverse current trip device (600) are bolted to the lower part of the pole unit base. The moving contact assembly is pivoted at its lower end on the pole unit base and is connected to the lower stud either directly or through a series overcurrent trip device. The stationary contact assembly is connected directly to the upper stud. The moving contact assembly opens and closes the electric circuit by moving out and in from the stationary contact assembly. An arc chute is mounted above and surrounding each pair of contacts. Its purpose is to stretch and cool the arc drawn when the contacts separate so that it may be readily extinguished.

The operating mechanism (200) is located on the breaker shelf (152) and transmits the force for closing the breaker from the operating handle (166) to the cross bar (168) and thence to the moving contact assembly through insulating links. The mechanism then latches and holds the contacts in the closed position. The circuit breaker is closed manually by turning the operating handle (166) 90° clockwise and it may be tripped manually by turning the handle 45° in the opposite direction. Automatic tripping is accomplished by one of the automatic devices which lift the trip bar when suitably energized. These devices consist of the shunt trip (500), the series overcurrent trip (400) and the reverse current trip (600) any or all of which may be supplied with an individual circuit breaker. One or more auxiliary switches (550) and a terminal block (169) are supplied depending on the number of control and auxiliary circuits to be controlled by the operation of the circuit breaker.

The main power circuit through the circuit breaker consists of the lower stud, series overcurrent trip coil (if supplied), shunt, moving contact assembly, stationary contact, and upper stud, all connected in series in the order named. D-C circuit breakers supplied with reverse current protection have a somewhat different arrangement. See Section D-14.

MOUNTING

DBN-40 circuit breakers are suitable for flush mounting in which arrangement the faceplate (155) is just behind the switchboard front plate or for recessed mounting. The standard depth from the rear mounting surface of the circuit breaker panel to the front of the faceplate is 13 inches. Provision is made, when specified, for a recessed mounting depth of 21-1/2 inches. See Fig. 1. A breaker intended for recessed mounting is provided with an ad-

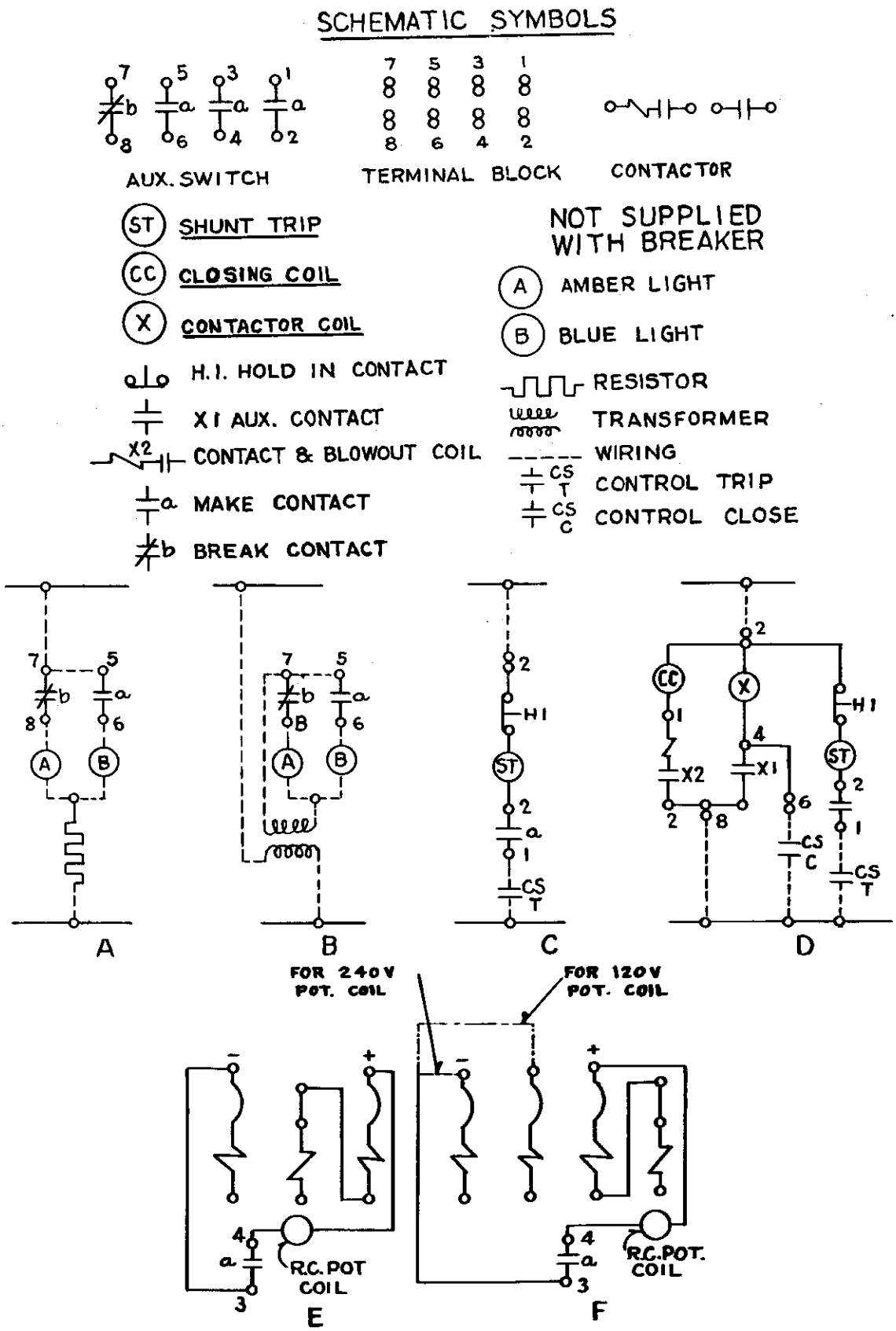

Figure 2 — Wiring Diagrams

ditional faceplate called an adapter plate (156), an operating handle extension (165), and a hold-in device extension (164).

B-2. ELECTRICALLY OPERATED CIRCUIT BREAKER

The electrically operated DBN-40 circuit breaker is basically the same equipment described in Section B-1 with the exception that it is equipped with a closing magnet (340) and a closing relay (300). These two attachments plus a source of closing power and a control switch enable an operator to close the circuit breaker from a remote point.

It should be noted that the addition of a closing magnet for electrical operation does not in any way change the manual operation features of the circuit breaker and that an electrically operated DBN-40 circuit breaker can also be manually operated.

SECTION C — OPERATION AND MAINTENANCE

CAUTION

Before working on a circuit breaker, load and control circuits feeding it must be de-energized. The breaker should be in the open position, but it should be noted that all circuit breaker studs are not necessarily dead when circuit breaker is open.

Before putting the circuit breaker in regular operation it should be closed and tripped manually several times to see whether all parts are in proper alignment and move freely. Particular care should be taken to make sure the studs have not been forced out of alignment by the bus work. Lift the trip bar by hand with the circuit breaker open to make sure that it does not bind.

WIRING DIAGRAM

Reference Figure 2

Figure 2 shows typical wiring diagrams of the DBN-40. Figures 2A and 2B show indicating light circuits for two breakers, 2A for d-c control voltage and 2B for a-c control voltage. Figure 2C shows the shunt trip circuit. Figure 2E shows the reverse current circuit arrangement for a two pole d-c breaker with two overcurrent trip devices. The reverse current trip device is mounted between the two poles. Figure 2F shows a three pole d-c breaker with three overcurrent trip devices. The reverse current trip device in this case is mounted outboard of the main breaker assembly. The reverse current potential coil is connected either across the two outside poles if a 240 volt coil or between the neutral pole and the right hand pole if a 120 volt coil.

Figure 2D shows the wiring diagram of an electrically operated DBN-40 circuit breaker. Reference is made to the other sections in this book on the closing magnet and the closing relay for an explanation of the part these devices play in the operation of an electrically operated circuit breaker.

CALIBRATION

SERIES OVERCURRENT TRIP DEVICES

The overcurrent trip devices are calibrated at the factory for long time delay pick-up, short time delay pickup, short time delay time band, and for instantaneous pickup. The long time delay pickup is the only calibration setting readily adjustable in the field. Details may be found in Section D-11 "Series Overcurrent Trip Device".

REVERSE CURRENT TRIP DEVICE

The reverse current trip device is set at the factory to trip the circuit breaker at a reverse current equal to either 5 or 10 percent of the full load current rating of the series coil of the device. The device is calibrated with the potential coil operated at rated voltage which is either 120 or 240 volts.

SHUNT TRIPPING

Shunt trip coils for d-c shunt tripping have a nominal voltage of either 120 or 240 volts.

For the 120 volt coil, the voltage range is from 70 to 140 volts. For the 240 volt coil, the voltage range is from 140 to 280 volts.

Shunt trip coils for a-c shunt tripping have a nominal voltage of either 115 or 450 volts.

For the 115 volt coil, the voltage range is from 80 to 130 volts. For the 450 volt coil, the voltage range is from 320 to 500 volts.

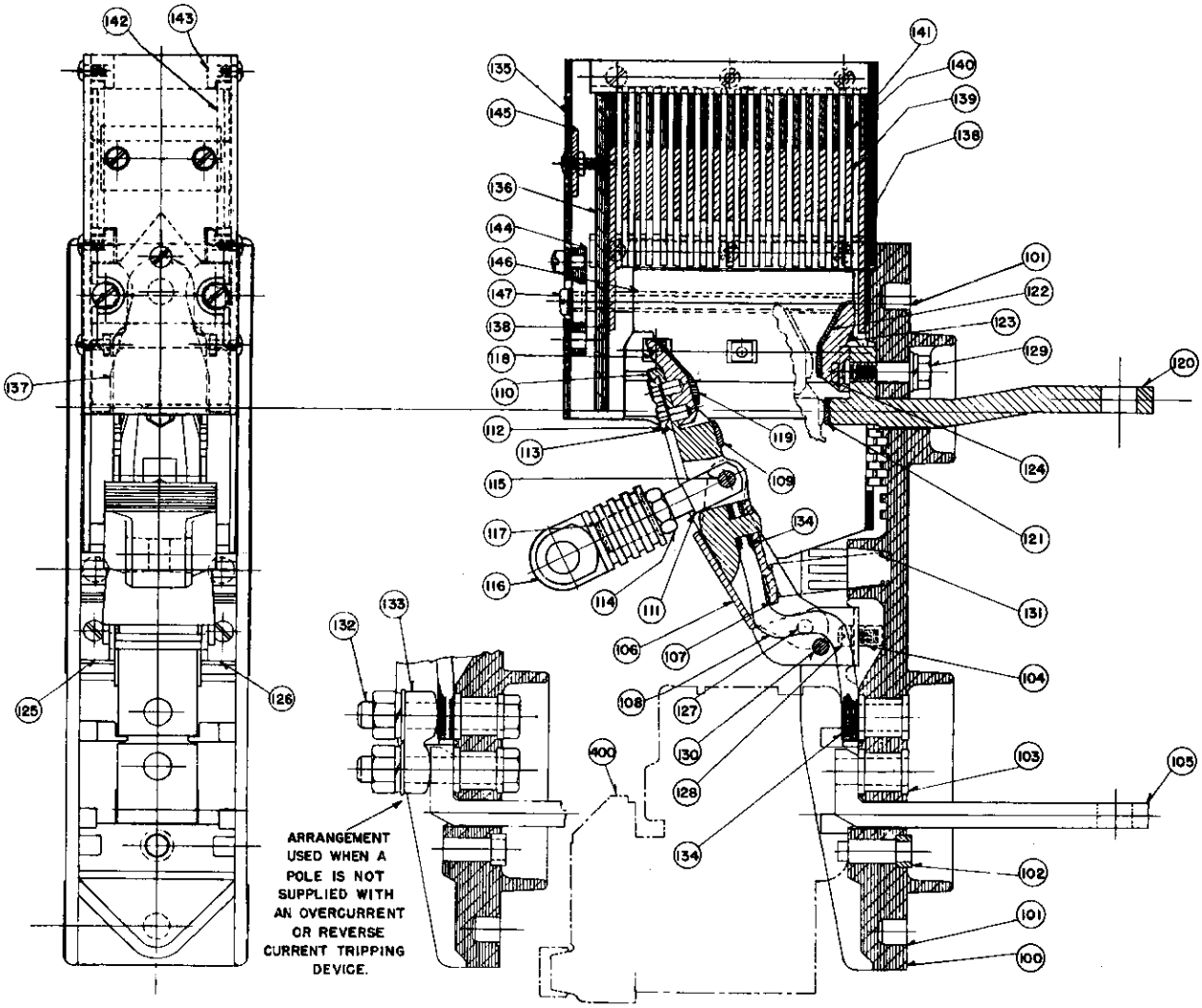

	100	MOLDED BASE
	101	INSERT
	102	INSERT
	103	INSERT
	104	INSERT
	105	LOWER STUD
	106	CONTACT LINK
	107	ARMATURE
	108	SHUNT
	109	MAIN MOVING CONTACT TIP
	110	CONTACT BASE
	111	LINK
	112	¼-20 X ⅜ HEX. STL. BOLT
	113	LOCKING CLIP
	114	½-20 BRS. LOCKNUT
	115	PIN
	116	MOLDED LINK
	117	INSERT
*	118	CONTACT, MOVING ARCING
	119	MOVING ARCING CONTACT TIP
	120	UPPER STUD
	121	STATIONARY CONTACT TIP
	122	STATIONARY ARCING CONTACT TIP
*	123	CONTACT, STATIONARY ARCING
	124	.190-32 X ⅝ PAN STL. SEMS MACH. SCR.
	125	BRACKET
	126	BRACKET
	127	PIN
	128	¼-20 X ½ FIL. STL. MACH. SCR.
	129	⅜-16 X 1¼ HEX. SI. BRZ. BOLT
	130	PIN
*	131	SPRING, ACCELERATING
	132	BOLT
	133	CONNECTOR
	134	SOLDER
	135	ARC CHUTE
	136	CLAMPING PLATE
	137	SHIELD
	138	PLATE
	139	PLATE
	140	PLATE
	141	PLATE
	142	SPACER
	143	GUIDE
	144	PLATE
	145	CLAMPING PLATE
	146	TUBE SPACER
	147	¼-20 X 6⅛ PAN STL. MACH. SCR.
	400	OVERCURRENT TRIP

* SPARE PARTS

Figure 3 — Arc Chute and Contact Assembly

so that it may quickly be extinguished and the circuit opened in the least possible time. The arc chutes are an extremely important part of the circuit breaker and the breaker should never be energized without their being mounted in place.

DESCRIPTION

Each arc chute consists of a number of metal plates (138) and (139) and asbestos plates (140) supported in a laminated case (135) and held in place by a clamping plate (136) and insulating tube spacers (146) and two screws (147) through the insulating spacers to the molded base (100). When the arc is drawn by the separating contacts, it moves up into the chute by magnetic and thermal action where it is quickly de-ionized and extinguished thus opening the circuit.

REPLACEMENTS

When inspection shows that the plates of the arc chute are badly burned it should be replaced by removing screws (147).

D-4. CONTACT ASSEMBLY

Reference Figure 3

FUNCTION

The contact assembly closes and opens the electric circuit through the circuit breaker. The upper stud (120), the stationary contact (121), the series overcurrent trip device (400) (when supplied) and the lower stud (105) are stationary and are mounted rigidly on the molded base (100). The moving contact assembly is hinged on the molded base by pin (127) and is moved in and out by molded insulating link (116) which is pivoted on cross bar (168) Figure 1.

The moving contact assembly is closed and held in the closed position against the force of the accelerating spring (131) by the insulating link (116). When the force exerted by the insulating link is released by tripping the breaker, the accelerating spring quickly moves the moving contact assembly to the open position. When the breaker interrupts high short circuit currents, magnetic forces play a large part in the rapid opening of the contacts.

With the circuit breaker in the closed position, main contact surfaces (109) and (121) are held together and carry the load current. When the circuit breaker is tripped, arcing contact surfaces (119) and (123) snap together an instant before main contact surfaces (109) and (121) separate and then the moving contact assembly moves away, drawing the arc between the arcing contacts. This arrangement minimizes arc damage to main current carrying contacts. When the circuit breaker is closed the arcing contact surfaces touch first and then separate as the main contacts touch and the closing operation is completed.

DESCRIPTION

The stationary contact assembly consists of the main contact extruded integral with the upper stud (120) and the arcing contact (123) fastened to the extruded copper section by two screws (124). Contact surfaces (121) and (123) are special arc-resisting silver alloy inserts.

The moving contact assembly consists of a contact base (110) of copper to which is fastened arcing contact (118) by two bolts (112) which are locked with locking clips (113). Main and arcing contact surfaces (109) and (119) are silver alloy inserts welded to their respective bases. Contact base (110) is riveted and soldered to shunt (108) which is bolted at its lower end either to a connector (133) when a series overcurrent trip device is not supplied, or to an overcurrent tripping device. The shunt (108) is a flexible bundle of thin copper strips that carries current from the moving contact assembly to the lower stud. Contact base (110) is connected to contact link (106) with pin (115) and has a limited freedom of rotation about this pin. Contact link (106) is hinged by pin (127) to bracket (125) fastened to molded base (100) by two screws (128). Pin (130) mounted in bracket (125) has the function of restraining shunt (108) when the circuit breaker is tripped.

The moving contact assembly is attached to the mechanism cross bar (168) Figure 1 by molded insulating link (116) which is screwed on metal link (111) and locked by nut (114). When the breaker is tripped all force is removed from the cross bar and accelerating spring (131) quickly snaps the moving contact assembly from the closed to the open position.

ADJUSTMENTS

The correct contact pressure of the DBN-40 is about 50 pounds. This pressure is obtained when the arcing contact surfaces are 3/32 inch apart when the breaker is closed. This gap may be adjusted after removing arc chute (135) by removing two screws (147) and cross bar (168). Loosen locknut (114) and turn insulating link counterclockwise if the gap is too small and clockwise if the gap is too large. The

ELECTRIC CLOSING

Closing coils and closing relay for d-c closing have a nominal voltage of either 120 or 240 volts.

For the 120 volt coil, the voltage range is from 90 to 130 volts. For the 240 volt coil, the range is from 180 to 260 volts.

Closing coils and closing relay for a-c closing have a nominal voltage of 115 volts or 450 volts.

For the 115 volt coil, the voltage range is from 90 to 130 volts. For the 450 volt coil, the range is 320 to 500 volts.

MAINTENANCE

The frequency of inspection for maintenance will depend upon local conditions but, in general, a complete inspection for preventive maintenance should be made at least once a year. It is recommended that a special inspection be given any breaker that has opened a heavy short-circuit current.

If excessive heating not caused be overcurrent is observed, look for loose or corroded contacts or connections.

When inspecting the circuit breaker, examine the contact surfaces. Rough or high spots should be removed with a clean file or sandpaper. Do not use emery cloth since the dust from this material is a good conductor of electricity and is sure to cause trouble if allowed to settle on insulating surfaces.

Arc chutes which are badly burned and corroded should be replaced.

More detailed maintenance instructions are given later on in the sections on the individual attachments.

SECTION D — COMPONENTS AND ATTACHMENTS

D-1. GENERAL ASSEMBLY (Manually Operated Breaker)

The DBN-40 air circuit breaker for three phase a-c service is normally provided with series overcurrent trip devices in the two outer poles only. Otherwise, all three poles are identical, each being provided with a stationary and moving contact assembly, and an arc chute.

For a two wire d-c breaker with reverse current protection, the overcurrent trip devices are located on the two outer pole unit bases and a reverse current trip device is mounted on the center base. On this center base, the stationary and moving contact assembly is replaced by a copper connector which connects the series coil of the reverse current trip device to the upper stud.

For a three wire d-c breaker with reverse current protection, a wider panel (18 inches) is required. In this case, all three poles are used and are provided with series overcurrent trip devices. The overcurrent trip device mounted on the center (neutral) pole has a rating equal to 25% of the rating of the outside poles. This center pole overcurrent trip device has a long time delay feature only without the short time delay and instantaneous features. The reverse current trip device is mounted outboard of the bracket and shelf assembly.

More specific information is listed under applicable sections in this book.

D-2. GENERAL ASSEMBLY (Electrically Operated Breaker)

The general assembly of the electrically operated DBN-40 is similar to that of the manually operated breaker. The addition of a closing magnet and closing relay makes the breaker electrically operated. In addition to this, the anti-shock-close device is arranged to act on the moving core of the closing magnet rather than directly on the mechanism as in the case of manually operated breakers.

For more specific information, reference should be made to applicable sections of this book.

D-3. ARC CHUTES

Reference Figure 3

FUNCTION

The arc chute (135) Figure 3, mounted above and surrounding the contact assembly of each pole, has the function of stretching and cooling the arc drawn by the separating contacts

locknut should be retightened and the cross bar and arc chutes replaced.

REPLACEMENTS

To replace moving arcing contact (118):

a. Remove arc chute (135) by means of screws (147).

b. Bend down locking clips (113) and remove bolts (112). When replacing bolts be sure to relock them by bending up corners of clips.

To replace stationary arcing contact (123):

a. Remove arc chute (135) by removing screws (147).

b. Removing screws (124) frees the contact.

To replace contact arm accelerating spring (131):

a. Remove arc chute (135) by removing screws (147).

b. End of spring may be slipped off projection on contact arm and replaced.

D-5. MECHANISM

Reference Figure 4

FUNCTION

The operating mechanism opens and closes the circuit breaker contacts by moving the cross bar (168) Figure 1 to which the moving contact assemblies are attached by insulating links. The DBN-40 is closed manually by turning the operating handle quickly and smoothly as far as it will go (90°) in a clockwise direction. The breaker may be tripped manually by turning the handle 45° in a counterclockwise direction. The breaker is tripped automatically by one of the automatic devices described later which rotate trip lever (220) about pin (224).

The mechanism is "trip free", that is, it is not possible to close the breaker if one of the automatic tripping devices moves the trip bar up during the closing stroke or if the trip bar is held in the raised position.

DESCRIPTION

The operating mechanism consists of a group of toggle links, and a latch attached to the operating mechanism frame on fixed pins (214), (226), (241), (216), and (224). The cross bar (168) is held by the closing lever (207). Rotating the operating handle clockwise moves the mechanism linkage from the open position shown in Figure 4 to the closed position shown. This is accomplished when the roller (236) on the end of the operating handle shaft (232) forces the first toggle link (203) upward pushing second toggle link (204), third toggle link (206) and closing lever (207) ahead of it. The motion of the toggle linkages is directed by link (205) which is pivoted at its lower end on pin (217) in latch (208). Latch (208) in turn is restrained from moving by roller latch (210) which is pivoted on pin (214) and engages trigger (221) on trip lever (220). The linkage is held in the closed position by pawl (209) which latches under pin (227). The handle shaft and lever are returned to the normal position after closing by handle return spring (233).

The mechanism is opened by rotating trip lever (220) counterclockwise. This is accomplished either by rotating handle counterclockwise, in which case the handle shaft lever strikes the extreme left end of trip lever (220) to move it downward; or by forcing push rod "E" of the tripping attachments to strike trip finger screw (243). In either case the counterclockwise rotation of the trip lever (220) moves trigger (221) out of engagement with the lower end of the roller latch (210), which in turn permits the roller latch to rotate counterclockwise out of engagement with latch (208). Latch (208) is then free to rotate in response to the pull of the latch link (205) so that the mechanism assumes the trip free position shown in Figure 4 in which the contacts are open but part of the mechanism levers are in the closed position. In this position pawl (209) is disengaged from pin (227) by a lug on link (204) which pushes it up permitting the linkage to collapse to the open position shown in Figure 4

Trip spring (234) returns operating handle to the normal vertical position after manual tripping. It is made considerably stronger than otherwise necessary in order to prevent tripping of the breaker by accidental flipping of the handle.

ANTI-BOUNCE LATCH

The anti-bounce latch (245) prevents the closing lever (207) from bouncing off its stops and re-closing the circuit when the circuit breaker interrupts maximum short circuit currents. When the circuit breaker interrupts these high currents, the crossbar knocks the latch up, causing the latch to engage the crossbar

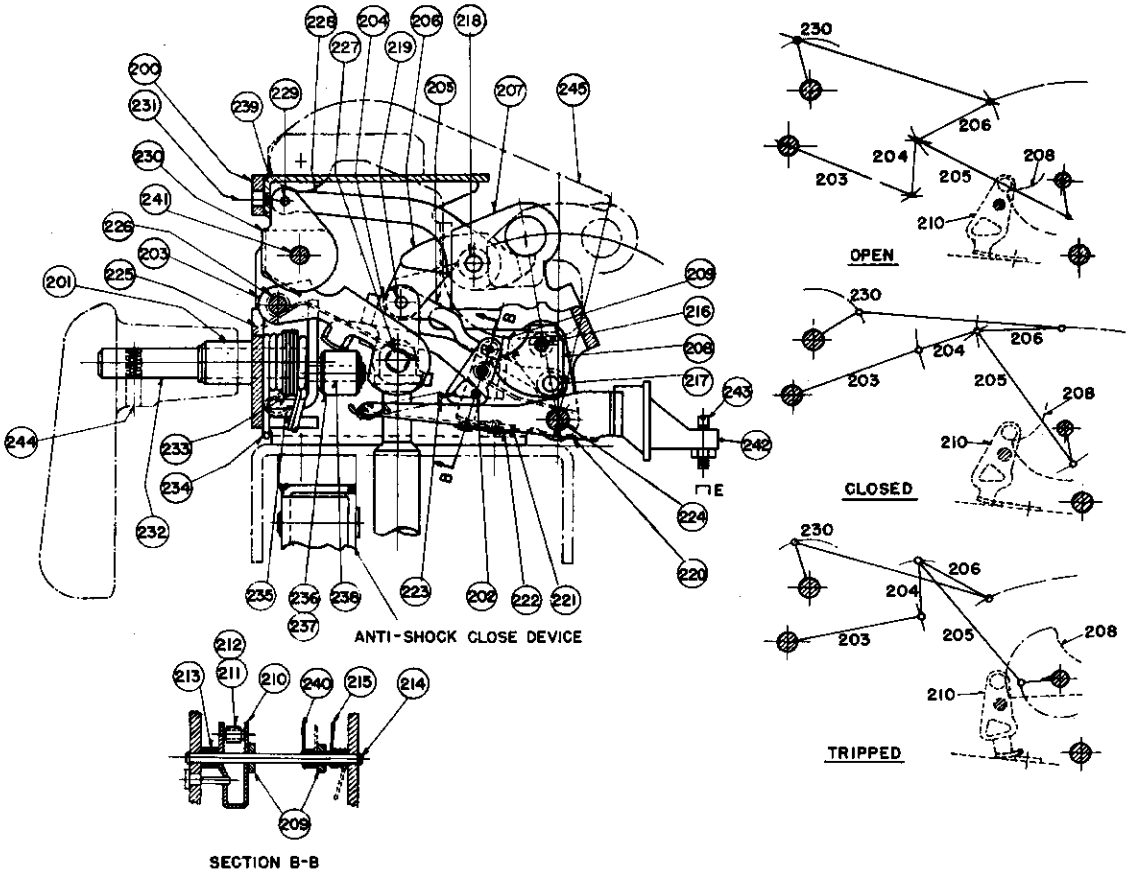

	200	MECH. FRAME
	201	BEARING
	202	LATCH STUD PIN
	203	FIRST TOGGLE LINK
	204	SECOND TOGGLE LINK
	205	LINK
	206	THIRD TOGGLE LINK
	207	CLOSING LEVER
	208	LATCH
	209	PAWL
	210	ROLLER LATCH
	211	ROLLER
	212	PIN
	213	SPACER
	214	PIN
*	215	SPRING, L.H. PAWL
	216	PIN
	217	PIN
	218	PIN
	219	PIN
	220	TRIP LEVER
	221	TRIGGER
	222	SPRING PLATE STOP
*	223	SPRING, ROLLER LATCH
	224	PIN
*	225	SPRING, RETRIEVE
	226	PIN
	227	PIN
	228	INDICATOR LINK
	229	PIN
	230	INDICATOR
	231	.138-32 X 3/8 PAN STL. SCR.
	232	SHAFT
*	233	SPRING, HANDLE RETURN
*	234	SPRING, TRIP
	235	LEVER
	236	ROLLER
	237	NEEDLE BEARING
	238	PIN
	239	COVER
*	240	SPRING, R.H. PAWL
	241	PIN
	242	TRIP FINGER
	243	SCREW
	244	5/16-24 SET SCREW
	245	ANTI-BOUNCE LATCH

*SPARE PARTS

Figure 4 — Mechanism

should it tend to return to the closed position. The latch is pivoted on the side of the mechanism frame.

POSITION INDICATOR

Position indicator (230) is formed from sheet metal and is pivoted on pin (241). It is visible from the front of the circuit breaker through a window in the faceplate and mechanism frame. See Figure 1. With the circuit breaker in the open position shown in Figure 4, the yellow face of the indicator shows through the window. The word "OPEN" is stamped on this yellow face. When the breaker closes, pin (218) of the closing lever (207) pulls indicator link (228) to the right, thus rotating the other face of the indicator up into a position visible through the window. This face is painted blue and is stamped with the word "CLOSED".

REPLACEMENTS

To replace roller latch spring (223):

a. Prepare to remove mechanism by removing anti-shock-open device (250), cutoff switch (275), terminal block (169) and auxiliary switch (550) all of Figure 1. Avoid removing any more wires than necessary. It will usually be possible to push the devices aside without removing the wiring. Tag any wires which may have to be removed.

b. Rotate handle (166) clockwise until pin (277) is visible through a hole in the right side of the mechanism frame. Using a small rod as a pusher, shove this pin part way through the hole until the rod of the anti-shock-close device, in the case of manually operated circuit breakers, or the operating rod of the closing magnet, in the case of electrically operated circuit breakers, drops off. Return the pin (227) to its proper location and allow linkages to fall open. This frees mechanism from anti-shock-close device or the closing magnet as the case may be.

c. Remove handle (166), faceplate (155) and cross bar (168) of Figure 1.

d. Remove the four bolts which hold mechanism to the shelf (152) Figure 1. This frees mechanism from shelf but frees also either anti-shock-close device (360) of manually operated breakers or closing magnet (340) of electrically operated breakers.

These devices should be temporarily replaced while repairs are being made to the mechanism.

e. Removal of pin (224) enables trip lever (220) to be removed and spring (223) may then be replaced.

To replace pawl springs (215) and (240):

a. Repeat a. to e. above.

b. Remove pin (214) far enough to release pawl (209). Roller latch (210) and hold-in which are pivoted on the same pin will then remain in place. Replace springs (215) and (240), making sure that their ends are supported correctly as indicated in Figure 4.

To replace trip spring (234) or handle return spring (233):

a. Repeat operations a. through e. under replacement of roller latch spring.

b. Remove pin (214) and drop pawl (209) and roller latch (210) out of frame.

c. Remove snap ring from handle shaft (232) and push the handle shaft back into frame. Spring (233) or (234) may then be replaced.

To replace retrieve spring (225):

a. Repeat operations a. through e. under "Replacement of Roller Latch Spring".

b. Remove cover (239).

c. Remove pins (241) and (226). Retrieve spring (225) may then be replaced.

When replacing mechanism springs, particular attention should be given to the mechanism drawing Figure 4 to see that spring ends are properly placed and that torsion springs are properly oriented to exert torque in the proper direction.

D-6. ANTI-SHOCK-CLOSE DEVICE

Reference Figure 5

FUNCTION

This device serves to prevent the circuit breaker contacts from closing from shock when open. This is accomplished by an arrangement whereby a mechanical escapement device or "ticker" is operated by the closing of the breaker. Shock blows tending to close the breaker are of such short duration that the mechanical escapement device does not have time to operate and the device effectively locks the open circuit breaker in the open position under shock conditions.

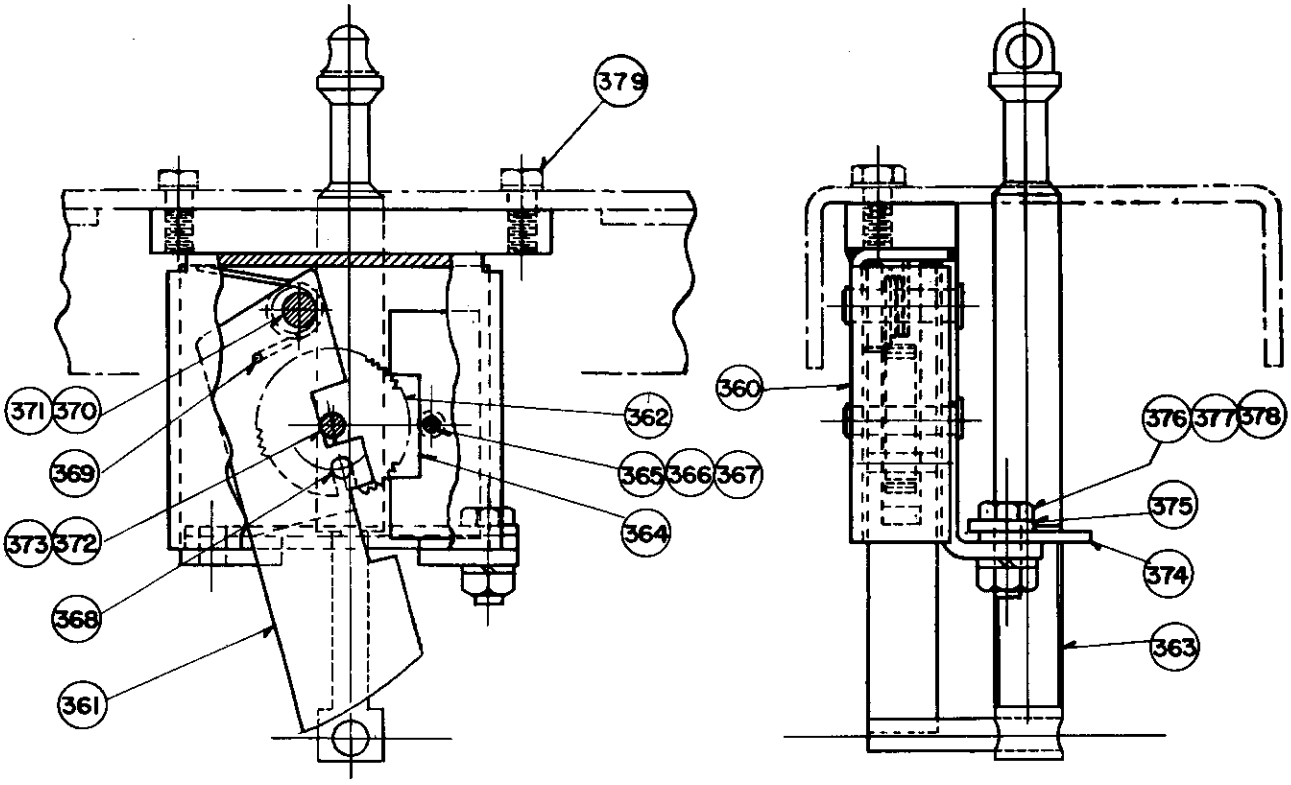

	360	CASE
	361	CAM
	362	WHEEL
	363	ROD AND CAM PUSHER
	364	OSCILLATOR
	365	PIN
	366	.190 STD. BRS. WASHER
	367	SNAP RING
	368	PIN
*	369	SPRING, RESET

* SPARE PARTS

370	PIN
371	SNAP RING
372	PIN
373	SNAP RING
374	GUIDE
375	GUIDE
376	5/16-18 X 7/8 HEX. STL. BOLT
377	5/16-18 HEX. MACH. SCR. NUT
378	5/16 STL. LOCKWASHER
379	BOLT

Figure 5 — Anti-Shock-Close Device

DESCRIPTION

The anti-shock-close device consists of a ticker case (360) Figure 5 which contains the ticker assembly, bolted to the platform by two bolts (379). A rod and cam pusher assembly (363) is connected at its upper end to pin (227) Fig. 4 of the mechanism. Whenever circuit breaker is closed, rod (363) is pulled up by pin (227) and cam (361) is caused to rotate in a clockwise direction around pin (370) against the torsion of return spring (369). As the cam rotates in this manner, oscillator wheel (362) is caused to rotate clockwise around pin (372) by pin (369) mounted in cam (361). The rotation of wheel (362) is regulated by mechanical oscillator (364) which is pivoted on pin (365). This oscillator oscillates due to the engagement of its teeth with the teeth of oscillator wheel (362). When the circuit breaker is tripped, rod (363) drops unimpeded and return spring (369) returns cam and consequently oscillator wheel to the "breaker open" position shown in the figure.

Shock blows tending to close the circuit breaker would have to act in such a way as to raise rod (363). These blows are of such short duration that the cam is restrained long enough by the oscillator wheel and oscillator to prevent closing of the circuit breaker.

REPLACEMENTS

To replace return spring (369):

a. Remove handle (166) and faceplate (155) Figure 1.

b. Remove guide pieces (374) and (375) by removing bolt (376).

c. Remove bolts (379) and remove case (360) from shelf.

d. Removing snap rings (367), (371), and (373) will allow corresponding pins to be removed. The various parts are then free to be removed and the spring may be replaced.

e. After reassembly, be sure that the cam operates freely and that it returns freely to its starting position when pushed over.

D-7. HOLD-IN DEVICE

Reference Figure 6

FUNCTION

This device prevents manual or automatic tripping of the circuit breaker as long as the hold-in button (276) is pushed in. No provision is made to lock it in the hold-in position. If an overcurrent of greater magnitude than the long time delay pickup setting occurs during the time the hold-in button is pressed in and persists long enough to have tripped the circuit breaker had the button not been pressed, the circuit breaker will trip out upon release of the hold-in button. An exception to the above statement occurs when the current after an overcurrent drops to a value lower than 30% of coil rating in which case the trip devices will reset and the breaker will not trip.

DESCRIPTION

Pushing on button (276) rotates lever (279) clockwise about pin (214) of mechanism. See Figure 4. Pin (281) which is a part of link (278) is forced against roller latch (210) of Figure 4 to hold it inoperative regardless of tripping impulses. In other words, trip lever (220) is free to move without tripping the breaker.

Extension on lever (279) pushes button of switch (275) upward to open the shunt trip coil circuit through hold-in contact and thus prevent overheating of the coil should the shunt trip coil be energized during the time the hold-in device is held in.

REPLACEMENTS

To replace return spring (280):

a. Remove anti-shock-open device (250) Figure 1 from shelf thus exposing hold-in device.

b. Remove snap ring from end of pin (214) Figure 4 and slip lever (279) off pin. Replace spring.

To replace switch (275):

a. Remove cover of switch and disconnect wiring.

b. Removal of two screws (286) frees the switch for replacement.

D-8. THE CLOSING MAGNET (Electrically Operated Breaker)

Reference Figure 7

FUNCTION

The closing magnet is the device used to close the circuit breaker electrically and is mounted directly below the mechanism and under

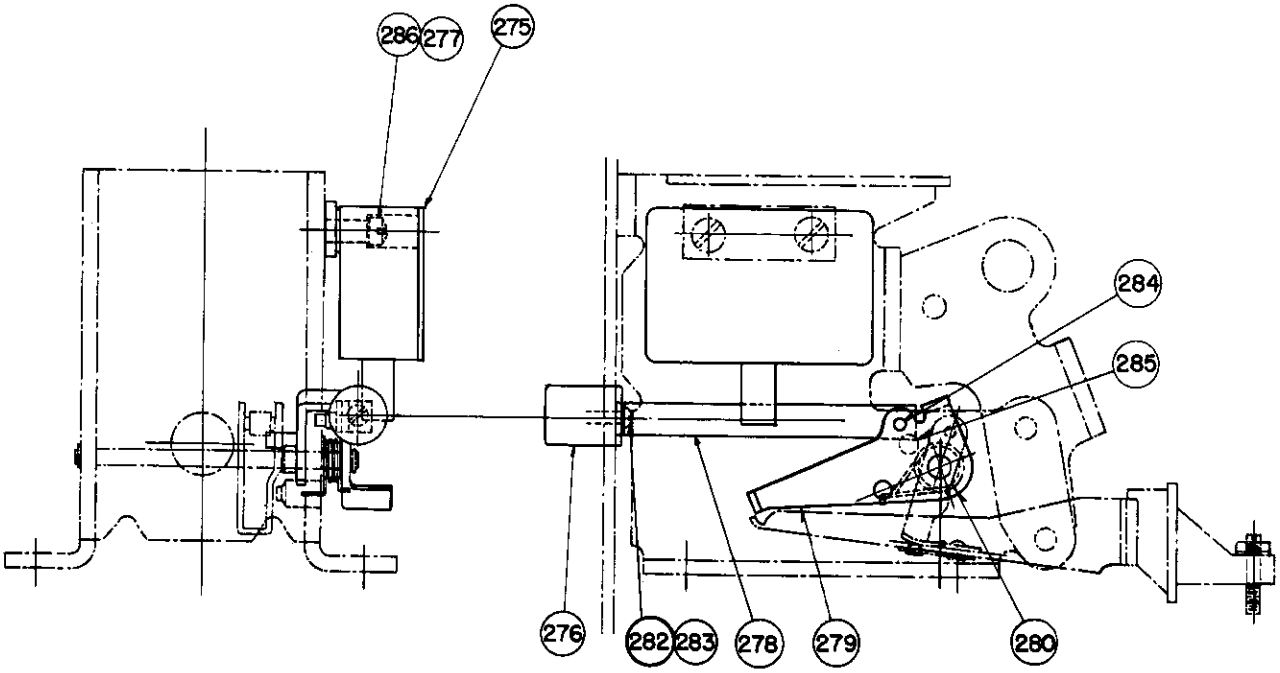

*	275	SWITCH
	276	BUTTON
	277	LOCKWASHER
	278	LINK
	279	LEVER
*	280	SPRING

282	LOCKWASHER
283	SELF-TAPPING SCREW
284	PIN
285	PIN
286	1/4-20 X 5/8 FIL. HD. STL. MACH. SCR.

CS - CONTROL TRIP
ST - SHUNT TRIP
HI - HOLD IN CONTACT
a - MAKE CONTACT

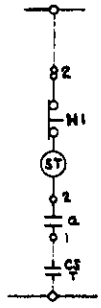

* SPARE PARTS

Figure 6 — Hold-In Device

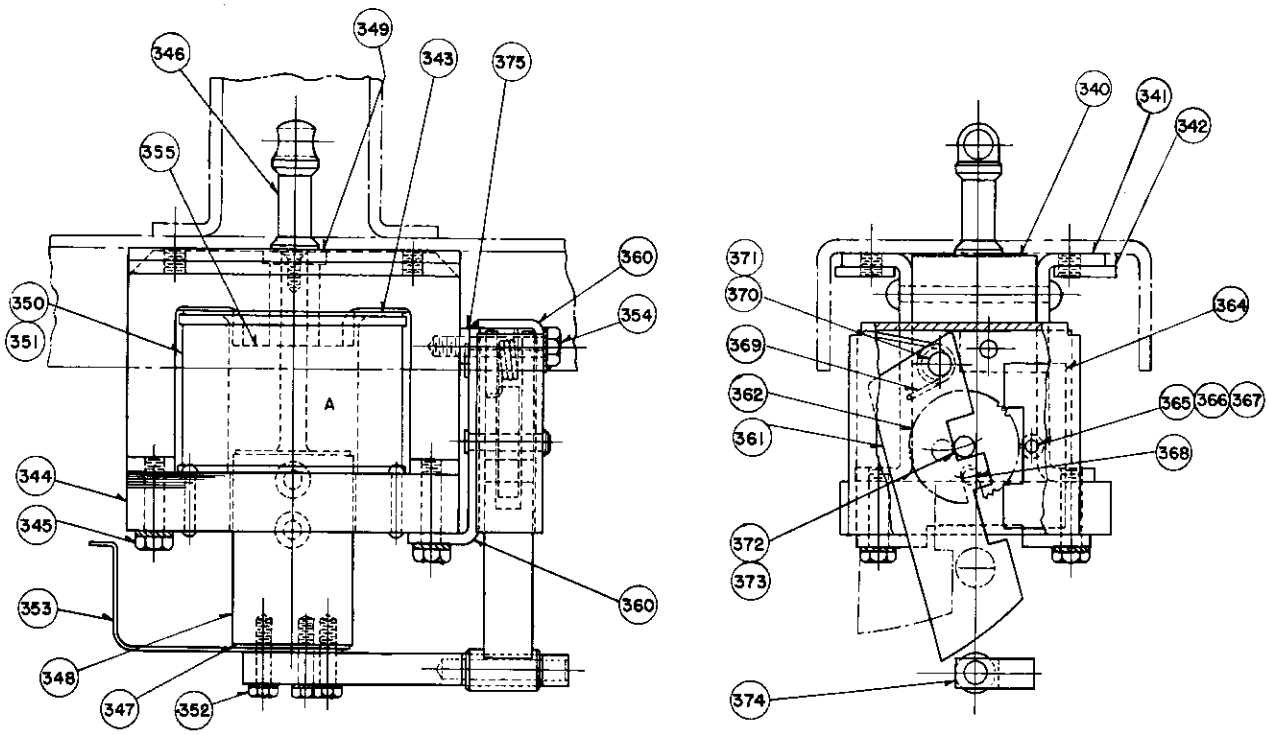

	340	CLOSING MAGNET
	341	SIDE PLATE
	342	PAD
	343	PACKING WASHER
	344	PUNCHINGS
	345	BOLT
	346	ROD
	347	PUNCHINGS
	348	MOVING CORE
	349	STOP
*	350	COIL
	351	SPOOL
	352	BOLT
	353	TRIP BRACKET
	354	BOLT
	355	STATIONARY CORE

*SPARE PARTS

	360	ANTI-SHOCK-CLOSE DEVICE
	361	CAM
	362	WHEEL
	364	OSCILLATOR
	365	PIN
	366	.190 STD. BRS. WASHER
	367	SNAP RING
	368	PIN
*	369	SPRING
	370	PIN
	371	SNAP RING
	372	PIN
	373	SNAP RING
	374	ARM
	375	PAD

Figure 7 — Closing Magnet

300	RELAY BASE	321	.164-32X3/8 PAN HD SCR
301	MOVING CONT ARM ASSY	322	.164-32X3/4 PAN HD SCR
*302	BLOWOUT MAGNET ASSY	323	.190-32X1 3/8 PAN HD SCR
*303	MOVING CONT ASSY	324	.190 STD WASHER
*304	STAT. CONT ASSY R.H.	325	.190 STD LOCKWASHER
305	FRAME	326	.190-32 NUT
306	STAT. CORE	327	SCREW
307	TERMINAL BRACKET	328	SPRING WASHER
308	RELEASE BRACKET	329	CONTACT ARM PIN
309	COVER	330	STRAP
310	ARC-CHAMBER	*331	STAT. CONT. ASS'Y L.H.
311	TERM. CONN	332	JUMPER
*312	SPRING, CONT. ARM	333	MOVING CORE
*313	SPRING, TRIP	*334	SPRING, LATCH
*314	SPRING, CONTACT	335	PIN
315	ELASTIC STOP NUT	336	LATCH
316	LATCH PIN	337	GUIDE TUBE
317	RELEASE BRKT PIN	*338	OPERATING COIL
318	1/4-20X9/8 SCREW	339	MOULDED SPOOL
319	.190-32X3/8 SCREW		
320	.190X1/4 BINDING HD SCR		

*SPARE PARTS

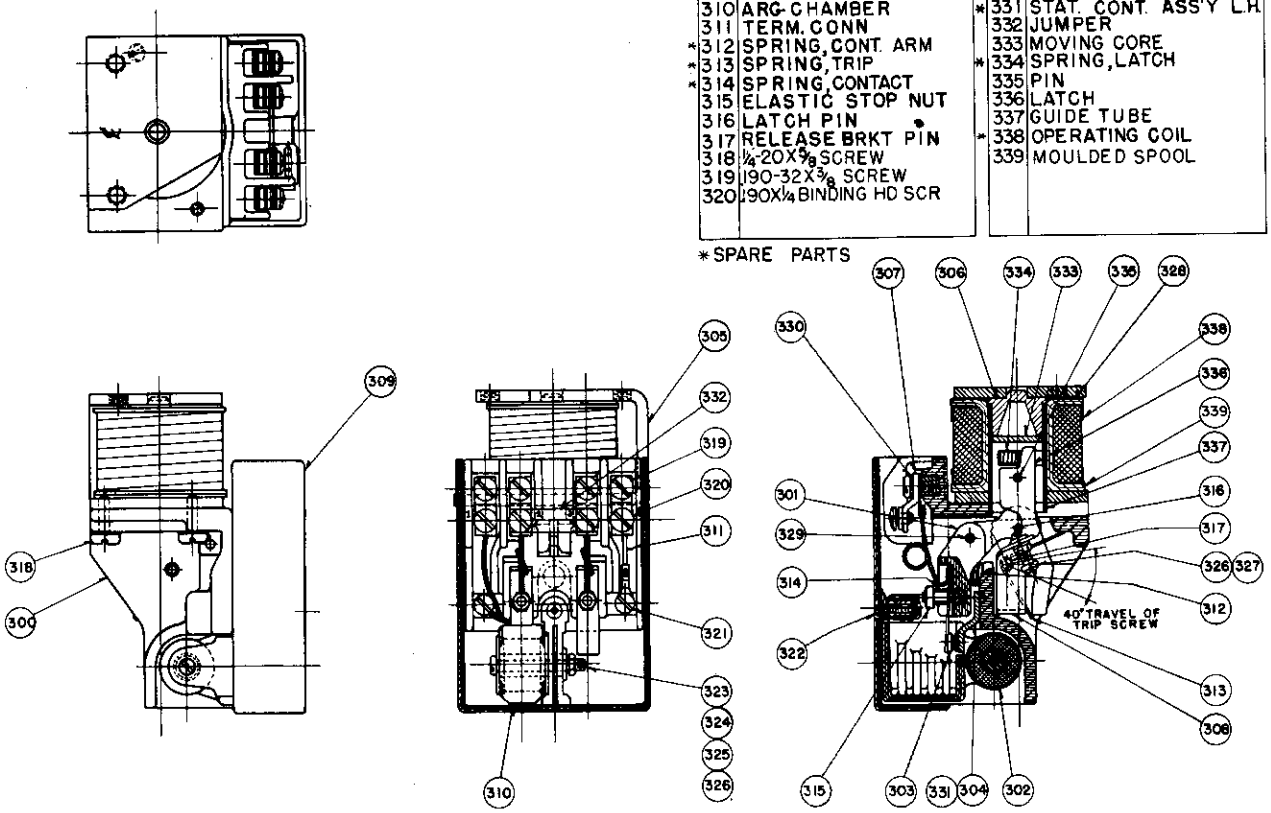

Figure 8 — Closing Relay

the shelf of the circuit breaker. It is secured to the shelf with the same four bolts that hold the mechanism in place.

Together with a control switch, a source of power, and the closing relay, the closing magnet enables an operator to close the circuit breaker from a remote point.

DESCRIPTION

The closing magnet Figure 7 consists of an iron frame or yoke which is securely bolted to the circuit breaker shelf, a plunger or moving core (348), an operating rod (346), a stationary core (355), and a coil (350).

The operating rod (346) connects the moving core (348) to pin (227) Figure 4 of the mechanism. It will be observed that an upward movement of this pin will cause the mechanism to close and latch the circuit breaker.

When coil (350) is energized by contact of relay (see Figure 2) the moving core (348) moves upward in response to the magnetic attraction between stationary and moving cores across air gap "A". About one-tenth of a second is required for the solenoid to close and latch the circuit breaker. When the moving core moves into the "breaker closed" or "closed gap" position, trip bracket (353) trips the relay mechanically, and its contacts open, thus de-energizing the closing magnet. The closing coil is momentarily rated and serious damage will result if potential is allowed to remain on its terminals through improper adjustment of trip screw (327) of the relay Figure 8 so that the relay does not trip and interrupt closing coil circuits. When the moving core and operating arm have pushed the mechanism linkages to the closed and latched position, pin (227) holds the moving core in the "closed gap position".

When the mechanism is tripped pin (227) falls allowing operating arm and moving core to fall with it.

REPLACEMENTS

To replace closing coil (350):

a. Remove handle (166) and faceplate (155) Figure 1.

b. Remove trip bracket (353) and cam pusher by removing bolts (352).

c. Remove anti-shock-close device from side of closing magnet by removing bolt (354) and bolts (345). This frees punchings (344).

d. Disconnect closing coil leads from terminal 2 of terminal block and terminal 1 of closing relay.

e. Coil may then be worked out of yoke and replaced.

ANTI-SHOCK-CLOSE DEVICE

On electrically operated circuit breakers, the anti-shock-close device (354) is bolted to the side of the closing magnet. Arm (374) bolted to the bottom of moving core (348) operates cam (361) of the device. Otherwise the operation is identical with that described in Section D-6.

D-9. CLOSING RELAY
(Electrically Operated Breaker)

Reference Figure 8

FUNCTION

The closing relay is used on electrically operated circuit breakers only and is mounted on the underside of the breaker shelf to the left of the closing magnet. The relay has the function of closing and opening the closing coil circuit in electrical operation. Together with the shunt trip, the relay enables the operator to control the circuit breaker electrically from a remote point by means of control switches.

DETAILED DESCRIPTION

The relay base (300) is molded from insulating material. The contact assemblies, coil assembly, and other parts are attached to the base. Frame (305) serves as part of the magnetic circuit of coil (338) and also serves to hold the coil in place. This frame or yoke is fastened to the molded base by three screws (318). The coil (338) is wound on a molded spool (339) and is held in place by guide tube (337) which extends from the top of the molded base through the bottom of the frame (305) and through the center of the spool. At its upper end the guide tube (337) supports the stationary core (306) firmly in place against the frame.

The moving core (333) is free to slide up and down in the guide tube (337). In moving up in response to the magnetic pull from the stationary core when the coil is energized by closing switch CSC, Figure 2D, the moving core pulls up latch (336) which is fastened with pin (335). When the coil (338) is energized, spring (334) bearing against latch (336) holds latch in such a position that it is hooked under latch

pin (316) thus causing moving contact arm assembly (301) to rotate counterclockwise around contact arm pin (329), thereby compressing spring (312). The moving contacts (303) are thus pulled against the stationary contacts (304) completing the circuit. In Figure 8 the moving core is shown in the upper or "contacts closed" position.

As soon as the contacts close, current starts flowing through the closing coil of the circuit breaker. The moving core (348) of the closing magnet, Figure 7, moves up, closing the circuit breaker. Trip bracket (353) fastened to moving core moves up with it and strikes trip screw (327) of the relay. The trip screw is fastened to release bracket (308) which is caused to rotate counterclockwise around pin (317) against the torque exerted by torsion spring (313). When release bracket (308) is rotated in this manner, it strikes the bottom of latch (336) rotating it counterclockwise around pin (336) against the force of spring (334). This rotation of latch (336) causes it to become disengaged from latch pin (316) and consequently spring (312) extends causing moving contact assembly (301) to rotate clockwise thereby snapping moving contacts (303) away from stationary contacts (304) and interrupting the circuits.

With the circuit breaker in the closed position, trip bracket (353) Figure 7 on the moving core of the closing magnet holds trip screw (327) of the relay in the trip position. Therefore, even though the relay coil may be inadvertently energized when the circuit breaker is latched, the relay contacts will not close and no current will flow through the circuit breaker closing coil.

The moving contacts (303) are resiliently mounted by means of springs (314) around studs set into the moving contact arm (301) and are secured by elastic stop nuts (315). This causes a slight rolling and wiping action on the spherically shaped contact surfaces as they meet which helps to insure a positive electrical connection.

The relay has a "seal-in" feature provided by the right hand contact which is connected in parallel with the control switch in the relay coil circuit. This means that, once energized, the relay will hold its contacts closed until it is tripped mechanically.

The left hand contact makes and interrupts the closing coil circuit. An arc chamber (310) molded from arc resisting material surrounds the left hand contacts. It is held in place by means of the two iron plates of the blowout magnet assembly (301) which in turn is fastened to the molded base (300) by means of screw (323). The blowout magnet coil is connected in series with the left hand contacts and consequently flux is flowing through the magnetic circuit and the air gap of the blowout magnet assembly at the time the contacts part and draw an arc. The magnetic circuit is so arranged that its air gap is across the arc chamber and the arc. The arc is forced by magnetic action down into the arc chamber where it goes out due to the stretching and cooling process. This arrangement makes possible a small and efficient relay.

REPLACEMENT OF SPARE PARTS

DANGER!

Before working on the relay, make sure that the circuit breaker is open and that the upper and lower studs are dead. Make sure that control circuits are dead. Realize that control wiring may be "hot" even though the main circuit breaker studs are dead.

Before replacing parts of the relay, it is best to disconnect the wiring and remove it from the circuit breaker:

a. Remove screw (322) and lift off molded cover (309) of the relay thus exposing the four numbered terminals.

b. Remove and tag the wires from the four terminals by loosening four screws (320).

c. One lead from the relay coil is connected to the terminal block. Remove front cover of the terminal block and disconnect lead.

d. Remove the two screws through the circuit breaker shelf (152) Figure 1 which hold the relay to the shelf.

The relay is now free from the circuit breaker.

To replace relay coil:

a. Remove three screws holding coil frame (305) to molded base (300) and remove from base.

b. Pull out guide tube (337), allowing stationary core to drop out. Coil is now free to be replaced.

To replace latch spring (334):

a. Remove frame (305) as before.

b. Lift out moving core assembly (333).

c. Rotate latch clockwise as far as it will go.

Spring will drop out. Replace.

To replace trip spring (313):

a. Remove snap ring from one end of release bracket pin (317) and push pin out.

b. Replace pin and new spring.

To replace moving contact arm assembly spring (312):

a. Remove snap ring from one end of contact arm pin (329) and push pin out.

b. This releases moving contact arm assembly (303) and spring (312) may then be replaced.

To replace moving contact (303) or contact spring (314):

a. Remove elastic stop nut (315) and replace spring (if necessary).

b. If a moving contact is to be replaced, disconnect its lead from under the applicable terminal screw (319) and remove and replace.

To replace blowout magnet assembly:

a. Remove leads of blowout coil.

b. Remove screw (323) and replace blowout magnet assembly.

To replace stationary contact assembly:

a. If left hand contact is to be removed, it will be necessary to remove blowout magnet assembly as outlined above.

b. Remove the applicable screw (321) and replace contact.

D-10. ANTI-SHOCK-OPEN DEVICE

Reference Figure 9

FUNCTION

This device prevents tripping of the circuit breaker due to rotation of the trip lever caused by shock but allows normal rotation of the trip lever by tripping devices.

DESCRIPTION

The bracket (250) is mounted on the supporting frame shelf to the immediate right of the operating mechanism frame (200) Figure 1 and is held to the shelf by two bolts (256). Lever (252) is pivoted on pin (253) as is plate (254). Lever and plate are connected by bolt and elastic stop nut (265) in such a way that if the trip bar rises, lever (252) rotates counterclockwise around pin (253) and plate (254) is caused to rotate in the same direction. Conversely, if plate (254) is restrained from rotating, trip bar is held down by lever (252). Under shock conditions, plate (254) is restrained from moving in the following manner:

Studs (255) and (258) are suspended on pin (251) and plate (254) is fitted with a slot in its end arranged so that the plate will slide down and allow the circuit breaker to trip under normal tripping impulses. Under shock conditions, however, the two outboard studs are caused to rotate around pin (251) due to the off center weights (257), thus jamming the plate (254) from sliding down. The middle stud is actuated by a separately pivoted weight (267) which rotates about pin (264). Spring (262) serves to hold weight in position shown during normal operation.

REPLACEMENTS

To replace plate spring (263):

a. Remove cover by removing screws (266)

b. Remove device from shelf by removing two screws (256).

c. Remove right hand snap ring from pin (253) and withdraw pin (253) far enough to free spring (263).

D-11. SERIES OVERCURRENT TRIP DEVICE

Reference Figure 10

FUNCTION

This device provides for selective protection of the various portions of the electrical system under three distinct conditions of current: First, for low overcurrent values, it will trip the breaker after a LONG TIME DELAY; second, for higher overcurrent values, it will trip the breaker after a SHORT TIME DELAY; and third, for still higher values of overcurrent, it will trip the circuit breaker instantaneously.

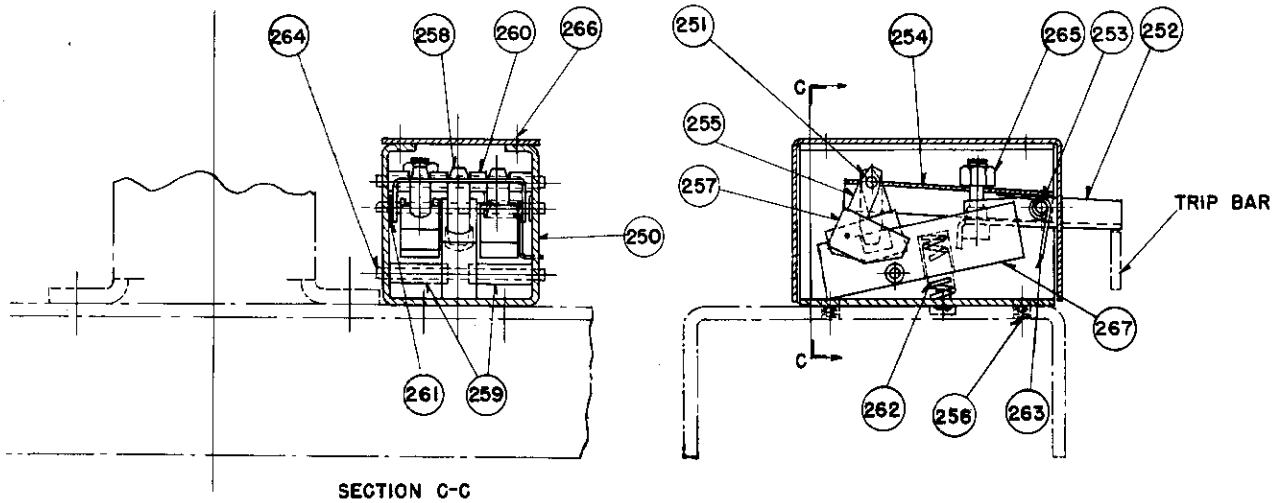

250	ANTI-SHOCK OPEN BRACKET		259	SPACER
251	PIN		260	SPACER
252	LEVER		261	WASHER
253	PIN	*	262	SPRING WEIGHT
254	PLATE	*	263	SPRING PLATE
255	STUD		264	PIN
256	SCREW		265	¼-20 ELASTIC STOP NUT
257	WEIGHT		266	.164-32 X ¼ FIL. HD. STL. MACH. SCR.
258	STUD		267	WEIGHT

*SPARE PARTS

Figure 9 — Anti-Shock-Open Device

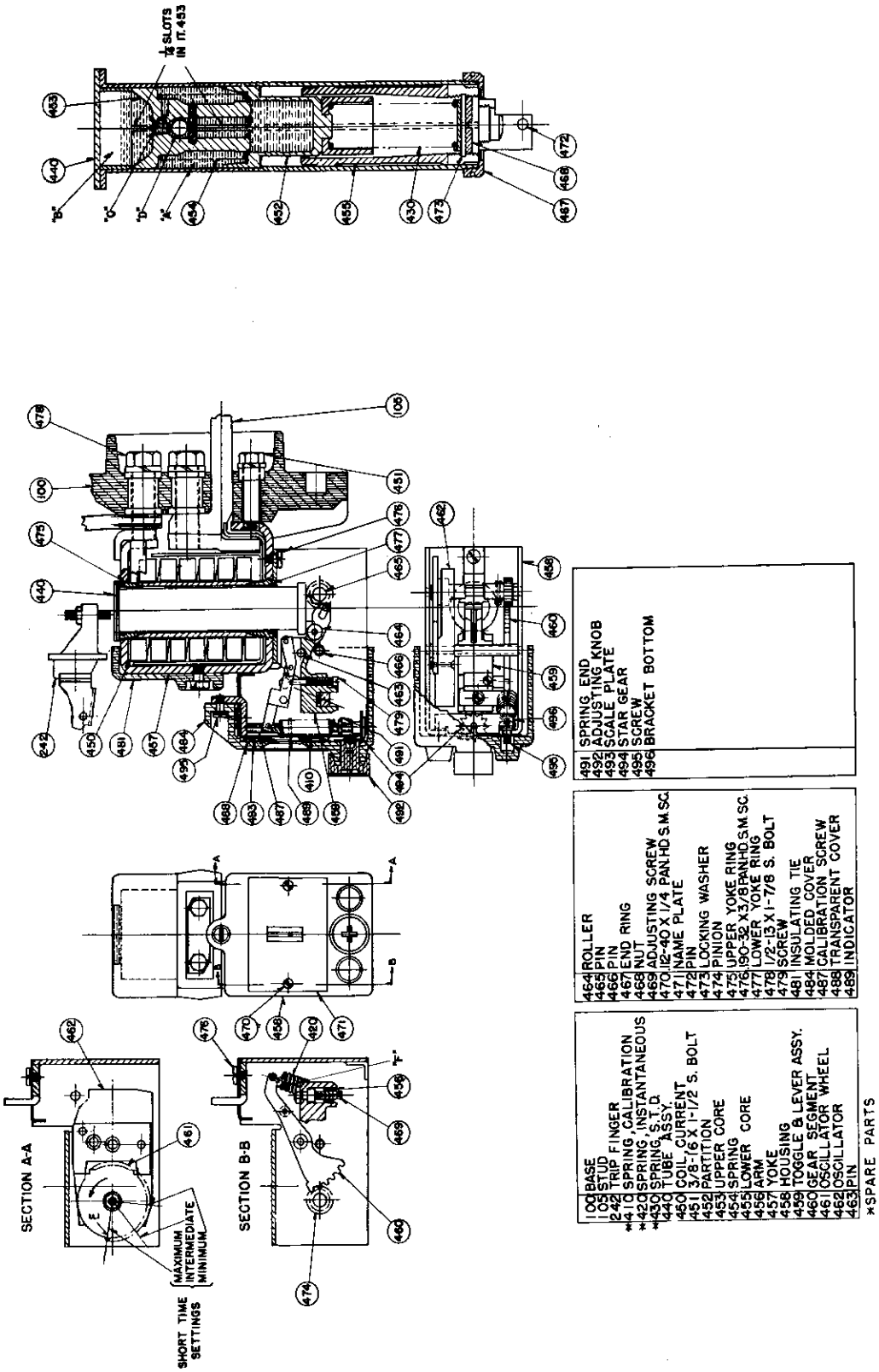

Figure 10 — Series Overcurrent Trip Device

DESCRIPTION

The device is actuated by an electromagnet connected in series with the moving contact assembly and the lower stud of the circuit breaker. By turning adjusting knob (492) the series overcurrent trip device can be set to pick up the armature subject to LONG TIME DELAY at ampere settings corresponding to approximately 150%, 200%, and 250% of trip coil rating. These three points are marked on the scale plate in amperes. If the overcurrent continues above the set value for the long time delay period as determined by an oil displacement piston, the circuit breaker will trip.

Unlike the long time delay pickup, the SHORT TIME DELAY pickup calibration is set at the factory at the ampere setting marked on the nameplate, and is not readily adjustable in the field. The operating time consists of three different time settings: minimum, intermediate and maximum time (see typical time current curves Figure 11). If an overcurrent occurs of greater magnitude than the short time delay pickup setting, the circuit breaker will trip subject to a short time delay as determined by a gear escapement mechanism without waiting for the longer time delay of the oil displacement piston.

At currents above the instantaneous setting, the circuit breaker trips without any intentional time delay. The pickup setting is made at the factory at some ampere value from 5 to 30 times the series overcurrent trip coil rating and is not readily adjustable in the field. The maximum setting shall not exceed 18,000 amperes.

If during the long or short time delay period the current drops to 100% of rated overcurrent trip coil current, the series overcurrent trip device will reset and the breaker will not trip provided the overcurrent has not persisted beyond the time indicated by the lower edge of the band curve for the particular breaker involved. If the current drops to a lower value than 100% of rated series coil current, the electrical reset time is increased in proportion. Figure 11 gives examples of typical time current characteristics of circuit breaker installations aboard ship.

LONG TIME DELAY

Sealed enclosed tube assembly (440) consists essentially of an upper core (453), an upper core spring (454), a lower core (455), a short time delay spring (430), and the tube. Space "A" is filled with a special fluid having a high viscosity. Partition (452) seals off this oil compartment from lower tube.

With an overcurrent less than the pickup setting of the short time delay device, upper core (453) remains in a fixed position relative to yoke (457) due to magnetic attraction between core and yoke through the tube wall, but lower core (455) moves upward in response to the magnetic pull between the upper and lower cores. Since the magnitude of the current is not sufficient to compress the short time delay spring (430), tube (440) also moves upward with lower core (455), forcing the liquid from space "A" to space "B" through orifice "C" in upper core (453). After tube (440) trips the breaker, the tube falls to its lower position carrying core (453) along with it. Then spring (454) returns the upper core (453) to its normal position, forcing the liquid back from space "B" to space "A" through a quick reset check valve "D".

SHORT TIME DELAY

The pin (472) in lower core (455) is attached to a mechanical escapement device enclosed in housing (458). This device consists of a lever (459) pivoted on a fixed pin (463) and connected through instantaneous spring (420) to gear segment (460) which operates pinion (474) and oscillator wheel (461) which is on the same shaft. Oscillator wheel (461) is impeded from free rotation by oscillator (462).

With overcurrents of sufficient magnitude to compress short time delay spring (430) but not sufficient to extend instantaneous spring (420), lower core (455) moves upward rotating lever (459) counterclockwise to operate the mechanical device; also roller (464) which is a part of lever (459) bears against the end ring (467), which is a part of tube assembly (440), to raise it and trip the breaker. Upper core (453) is carried along with tube (452) as the liquid does not have time to flow from space "A" to space "B".

INSTANTANEOUS TRIP

With fault currents of sufficient magnitude to extend instantaneous spring (420), the operation is identical with the above except that the upward motion of lower core (455) is not restrained by oscillator (462) due to the extension of instantaneous spring (420).

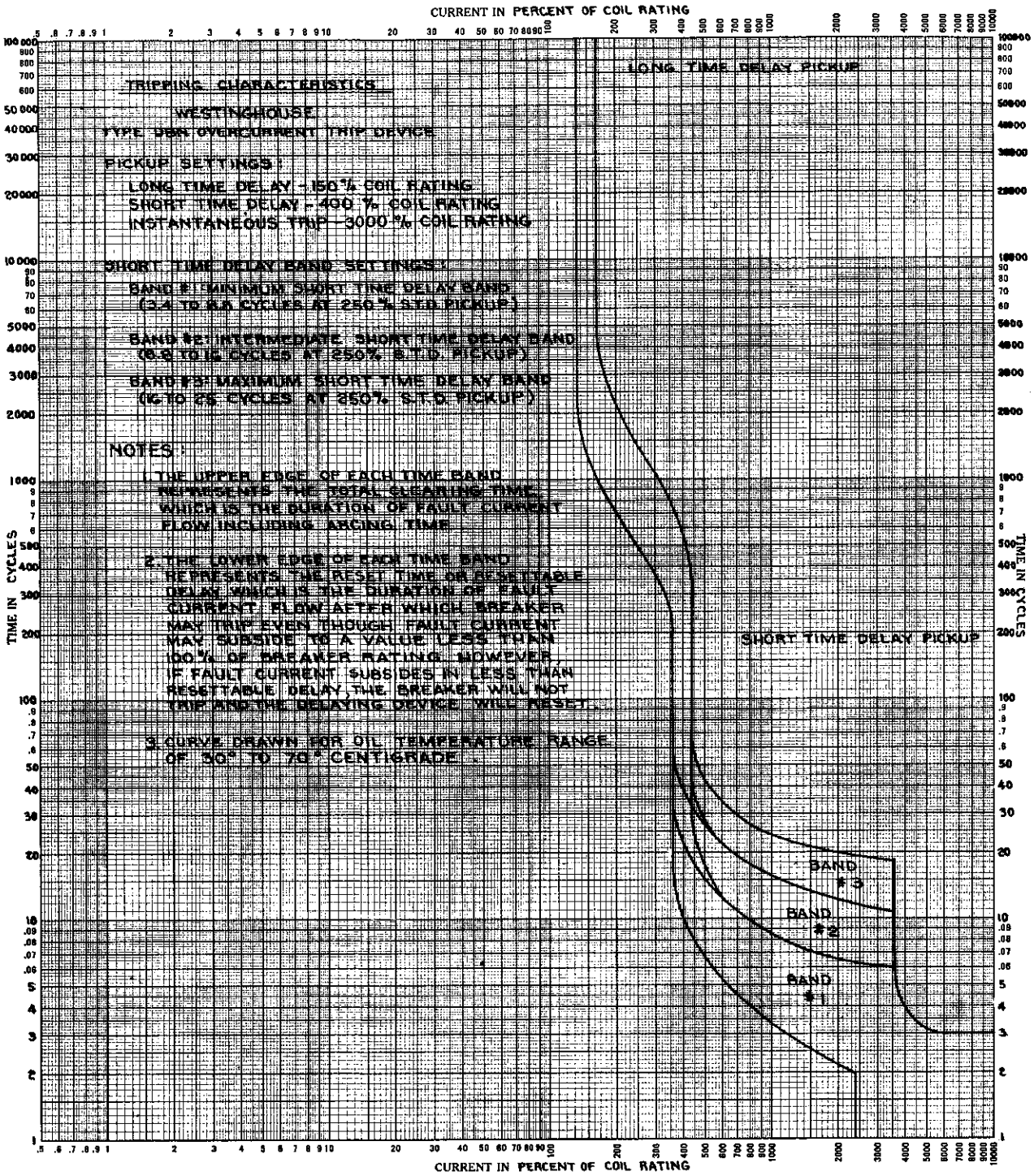

Figure 11 — Time vs. Current Calibration Curves

ADJUSTMENTS

CAUTION

The only adjustment which can be made while the circuit breaker is energized is the long time delay pickup adjustment. When making this adjustment, use extreme care not to touch any part of the device except knob (492) or molded cover (484).

To change the pickup current setting of the long time delay device, turn adjusting knob (492) so that indicator (489) points to desired current setting.

To change the pickup current setting of the short time delay device, it is necessary to change short time delay spring (430):

a. Remove two bolts (478) and bolt (451) from the back of panel and remove the trip device.

b. Remove two screws (495) and remove molded cover (484) and transparent cover (488).

c. Remove three screws (476) and drop the housing (458) from the yoke assembly (457).

d. Remove spring clip in end ring (467) and unscrew end ring thus freeing lower core (455) and short time delay spring (430). Care must be taken that the prongs of locking washer fit into slots in lower core when replacing the spring. The spring which is used to replace must have been previously tested and tagged at the factory to give the desired characteristics.

To change the short time delay band:

e. Perform a. and b. above, push segment (460) with a thin screw driver at "F" in direction shown by arrow to disengage gear pinion wheel (474) from segment (460). Turn gear pinion (474) one tooth clockwise to increase the short time delay and one tooth counterclockwise to decrease the time delay. If a closer adjustment is wanted, turn screw (479) in to increase time delay and out to decrease the short time delay. This screw (479) must be locked in place by pin pricking the casting (459) near the screw.

To change the instantaneous trip current pickup:

f. Perform a. and b. above. Remove scale plate (493) and unhook upper ends of calibration springs. Pull out bottom of calibration screw (487) and star gear (494) from bracket bottom (496). Take care to leave indicator (489) in same place on calibration screw when laying this assembly aside. Remove screw and nut (469) unhook spring (420) from arm (456) and segment (460) and replace with new spring having the desired pickup current characteristics. Minor variations in instantaneous pickup may be obtained by turning screw (469) in and out. Turning screw in increases the pickup and turning the screw out decreases the pickup current. This screw must be locked by pin pricking arm (456) near it.

REPLACEMENTS

To replace short time delay spring (430): Proceed as described under Adjustments a., b., c., and d.

To replace instantaneous spring (420) or calibration spring (410): Proceed as described under Adjustments f.

NOTE: Any adjustments or replacements on the overcurrent attachment should be regarded as temporary pending recalibration or replacement of the complete overcurrent attachment. Adjustments of the short time delay time and the instantaneous pickup setting are not recommended unless absolutely necessary.

D-12. AUXILIARY SWITCH

Reference Figure 12

FUNCTION

The auxiliary switch is used to close or open auxiliary or control circuits. The closed or open positions of its sets of contacts are coordinated with the closed or open position of the main circuit breaker contacts.

DESCRIPTION

The four pole type RC auxiliary switch is mounted on the top of the supporting frame shelf to the left of the operating mechanism. It is operated by shaft (555) and arm (557) which connects to the breaker lever of the operating mechanism. An eight pole auxiliary switch consists of two four pole switches, one mounted above the other. Each breaker is supplied with one 4-pole switch unless otherwise specified.

The contacts are designed to carry 15 amperes continuously or 250 amperes for three seconds.

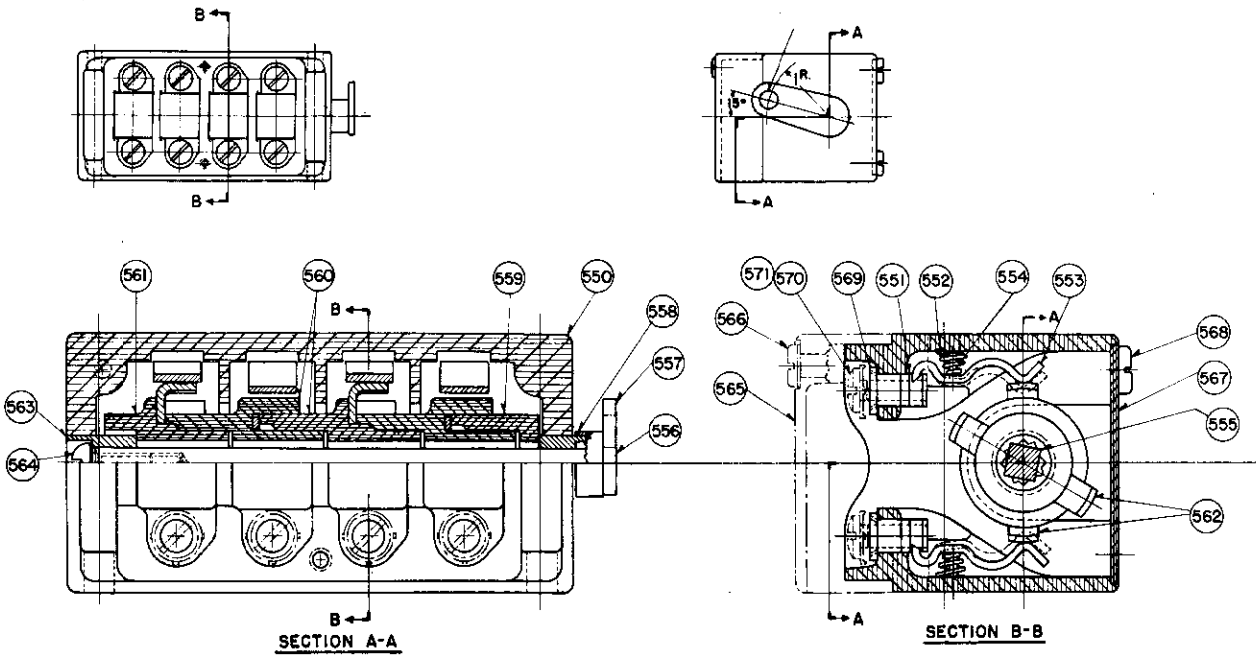

*	550	AUXILIARY SWITCH
	551	STEM
	552	CONTACT SPRING
	553	CONTACT FINGER
	554	RIVET
	555	SHAFT
	556	SHAFT END
	557	ARM
	558	SPACER
	559	ROTOR END
	560	ROTOR SECTION

561	ROTOR END
562	CONTACT
563	BUSHING
564	.190-32 X ½ RD. T. C. SEMS MACH. SCR.
565	COVER
566	.164-32 X ¾ PAN BL. STL. SEMS MACH. SCR.
567	COVER
568	.164-32 X ⅜ PAN T. C. BL. STL. MACH. SCR.
569	COLLAR
570	.164-32 X ½ BD. SI. BRZ. MACH. SCR.
571	CRIMP WASHER

* SPARE PARTS

Figure 12 — Auxiliary Switch

The INTERRUPTING CAPACITIES of the auxiliary switch contacts are as follows:

Volts	Non-Inductive Circuit	Inductive Circuit
125 DC	11 Amps.	6.25 Amps.
250 DC	2 Amps.	1.75 Amps.
115 AC	75 Amps.	15.0 Amps.
450 AC	25 Amps.	5.0 Amps.

For the purposes of this table, an "inductive" circuit is considered to be a bell alarm or shunt trip circuit and a "non-inductive" circuit is considered to be an indicating light or similar circuit.

The auxiliary switch is a shaft-operated, four pole, rotary type having "a" and "b" contacts. An "a" contact is one that is open when the circuit breaker is open, and a "b" contact is one that is closed when the circuit breaker is open.

A square shaft (555) extends through the rotor molds (560) which in turn insulate and support the rotor contacts (562). The rotor assembly is clamped together into a solid unit by screw (564). The rotor contacts are set 60° apart for 60° rotation of shaft (555).

Contact fingers (553) have one end hooked into stem (551) with spring (554) maintaining pressure between the finger contact and stem. The center of the contact finger bears against a stop surface in casing (550) to position the outer end of the contact finger.

ADJUSTMENT

The auxiliary switch is non-adjustable. However, it may be necessary to change from an "a" to a "b" contact or vice versa. This is accomplished as follows:

a. Remove switch from the supporting frame shelf as described under "a" and "b" of Replacements".

b. Remove screw (564) and withdraw shaft (555) completely.

c. Lift the rotor assembly out of the casing, pull apart slightly at the rotor contact to be changed to disengage the positioning lugs turn the rotor contact 60° to line up with the adjacent contact and push the rotor assembly together to lock in place.

d. When replacing shaft (104) during reassembling, be sure that the crank portion is positioned exactly as removed relative to one of the unchanged contacts. This care is necessary as the shaft can also be reassembled when rotated either way 30°.

REPLACEMENT OF AUXILIARY SWITCH

a. Remove and tag the terminal connections.

b. Disconnect arm (557) from closing lever, remove the two mounting bolts and remove switch.

c. Remove link from closing lever and add to new switch.

D-13. SHUNT TRIP DEVICE

Reference Figure 13

FUNCTION

The shunt trip device serves as a means of tripping the circuit breaker from some remote point by the closing of a control switch or relay contacts at that remote point.

DESCRIPTION

The shunt trip device is mounted on the extreme right end of the supporting frame shelf. It consists of a frame, coil and moving core mounted horizontally. Energizing trip coil (513) causes a magnetic attraction between stationary core (503) and moving core (504) which causes moving core (504) to move to the left rotating trip lever (501) about pin (502). Lever (501) raises trip bar (157) Fig. 1 to trip the circuit breaker. The opening of the circuit breaker de-energizes the shunt trip coil through an "a" contact of the auxiliary switch. See Section D-12. Spring (508) returns moving core (504) to its normal position. Non-magnetic washer (510) prevents residual magnetism from holding the cores together when the coils is de-energized.

REPLACEMENTS

To replace coil (513):

a. Disconnect the shunt trip leads from the auxiliary switch and cut-off switch.

b. Take out the two bolts (515) and remove the shunt trip assembly from the supporting frame.

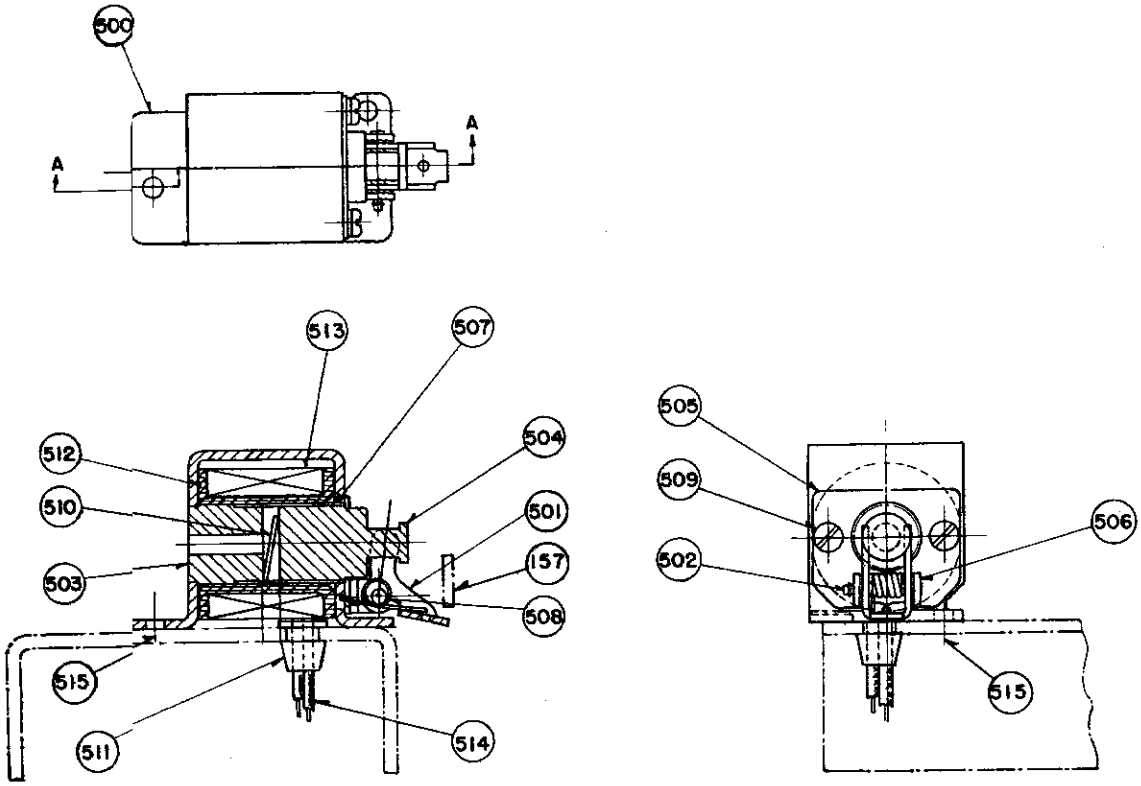

SECTION A-A

	500	SHUNT TRIP FRAME
	501	TRIP LEVER
	502	PIN
	503	STATIONARY CORE
	504	MOVING CORE
	505	PLATE
	506	BRACKET
	507	SLEEVE
*	508	SPRING, RESET
	509	SCREW
	510	WASHER
	511	BUSHING
	512	COIL SPOOL
*	513	COIL
	514	LEADS
	515	BOLTS
	157	TRIP BAR

* SPARE PARTS

Figure 13 — Shunt Trip Device

c. Remove pin (502) and screws (509) holding plate (505) in place and drop out the moving core (504), stationary core (503) and sleeve (507). The coil is then free to be replaced.

To replace spring (508):

a. Repeat operations a. and b. above.

b. Remove pin (502) and replace spring (508).

D-14. REVERSE CURRENT TRIP DEVICE (D-C Circuit Breaker)

Reference Figure 14

FUNCTION

This device has application on direct current breakers only. It will instantaneously trip the circuit breaker when the current flows in its series coil in the reverse direction and exceeds the calibration setting. This device is set and marked in amperes, at the factory, at either 5 or 10 percent of the rated continuous current of the circuit breaker overcurrent trip coils.

DESCRIPTION

This device is mounted on the center insulating base of a two pole breaker and the top terminal of its current coil is connected to the upper stud (120) of the circuit breaker. A copper connector (634) connects this upper stud to the lower stud of the right hand pole. Thus the series coil (624) of the reverse current trip device is connected in series with the right hand pole of the circuit breaker.

A three pole breaker with reverse current protection requires a larger panel as can be seen by an examination of the general assembly Figure 1. In this case a molded base (100) is mounted outboard to the right of the bracket and shelf assembly (151) and the reverse current device is mounted on this molded base. It is connected in series with the right hand pole in the same manner as on the two pole breaker.

The potential coil (623) is connected directly across the line through an "a" contact of the auxiliary switch as shown in Figure 2. This contact demagnetizes the armature (603) when the breaker trips and permits calibration spring (612) to reset it.

The main structural parts of the device consist of a yoke (600), a pole piece (601), a core (610) and an armature (603), all of magnetic steel. Bearing casting (602) of non-magnetic material is drilled for pin (621) about which armature (603) has a limited freedom of rotation. If armature (603) rotates counterclockwise, it pulls pin (619) and link (606) with it. After link (606) has traveled some distance, the slot in its end engages pin (622) of trip lever (605) and moves it to the left. This causes trip lever (605) to rotate clockwise about fixed pin (620) in bearing casting (602). This rotation causes the trip lever (605) to move trip screw (243) Figure 1 up thus causing the circuit breaker to trip. Slot in link (606) is to enable armature (603) to gain momentum before picking up the trip load.

Each of the coils of the device, the potential coil (623) and the series coil (624), has its own magnetic circuit. With forward current flowing in series coil (624), pole B is a south pole, say, and pole A is a north pole. At the bottom of the magnetic circuit of series coil (624), pole D is a north pole and pole C is a south pole as far as the series coil magnetic circuit is concerned. In the potential coil magnetic circuit, pole E, is a north pole and pole C is a south pole as far as the potential coil magnetic circuit is concerned. It can be seen that under the circumstance of forward current flow in the series coil, the magnetic pull between unlike poles C and D will hold armature (603) immobile since pole C is a strong south pole due to flux from both coils while pole D is a north pole due to flux of series coil.

When the current in series coil (624) reverses, poles A and B change their polarity to south and north respectively, and pole D changes to a south pole. Since pole E is still a north pole due to the potential coil, there is now an attraction between poles D and E where repulsion existed before. Pole C is still a south pole as far as the potential coil is concerned but has become a north pole with respect to the series coil. The net result is that pole C becomes very weak and as soon as the attraction between unlike poles A and B and the attraction between unlike poles D and E becomes strong enough to overcome the tension in calibration spring (612), the armature rotates counterclockwise and trips the circuit breaker as described before.

This device is set at the factory and should not be tampered with in the field. However, it may be necessary to make a field adjustment in case calibration spring (612) has been replaced.

a. Remove two screws in nameplate and remove nameplate from device.

	100	MOLDED BASE
	105	LOWER STUD
	600	YOKE
	601	POLE PIECE
	602	BEARING CASTING
	603	ARMATURE
	604	LUG
	605	TRIP LEVER
	606	LINK
	607	BAND
	608	ARM
	609	LOCKING PIECE
	610	CORE
	611	5/16-18 X 3 1/4 FLAT HD.STL.MACH.SCREW
*	612	SPRING, CALIBRATION
	613	CALIBRATION SCREW
	614	1/4-20 SET SCREW

	617	PIN
	618	.190-32 X 1/2 PAN STL.SEMS MACH.SCR.
	619	PIN
	620	PIN
	621	PIN
	622	PIN
*	623	POTENTIAL COIL
	624	SERIES COIL
	625	TUBE
	626	INSULATION
	627	INSULATION
	628	INSULATION
	629	WASHER
	630	1/2-13 X 1 7/8 HEX.STL.BOLT
	631	3/8-16 X 2 HEX.STL.BOLT
	632	3/8-16 X 1 1/2 HEX.STL.BOLT
	633	1/2-13 X 1 3/4 HEX.STL.BOLT
	634	CONNECTOR
	635	CONNECTOR

*SPARE PARTS

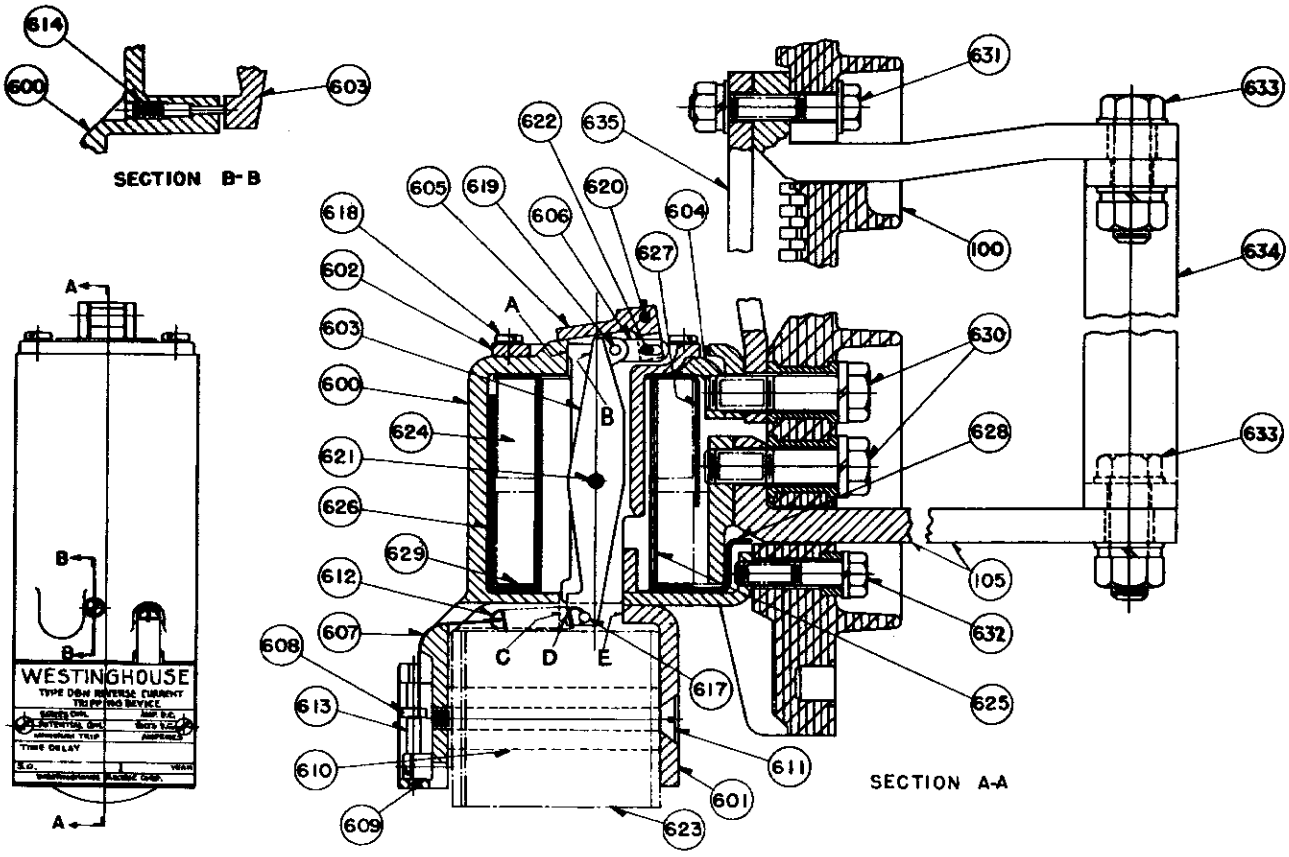

Figure 14 — Reverse Current Trip Device

b. Remove locking piece (609).

c. Calibration screw (613) has a square cross section and may be turned with a small wrench. Turning screw (613) so that arm (608) moves down increases the calibration setting of the device and turning it the other direction decreases the setting. The screw should be set so that the amount of reverse current indicated on the nameplate will just trip the circuit breaker.

REPLACEMENTS

a. Calibration spring (612) can be easily replaced after removing the device from the circuit breaker. It is accessible without removing other parts. The device is removed from the breaker by removing bolts (630) and (632).

To replace potential coil (623):

a. Disconnect wiring from terminal 4 of the auxiliary switch and from the bus as shown in wiring diagram Figure 2.

b. Remove unit from the circuit breaker by removing bolts (630) and (632).

c. Removing screw (611) frees the voltage coil for replacement.

NOTE: Any field adjustment of this device should be regarded as temporary pending recalibration at the factory.

D-20. SPARE PARTS

NAVY TYPE ACB, 600 AMP. FRAME
WESTINGHOUSE TYPE DBN-40
AIR CIRCUIT BREAKER

FIG. NO.	IT.	NAME OF PART	MFR'S. STYLE NO.	Quantity spares Supplied per Bkr. 3 Pole Man.Oper.	3 Pole Elec.Oper.	NOTE #4
1,12	550	Switch, Auxiliary	1397643	1	1	
1,6	275	Switch, Cut-off (hold-in)	1574799	1	1	
3	131	Spring, Accelerating	1491496	1	1	
3	118	Contact, Moving Arcing	1574789	3	3	NOTE #2
3	123	Contact, Stationary Arcing	1574797	3	3	NOTE #2
4	215	Spring, L.H. Pawl (Mech.)	1574606	1	1	
4	240	Spring, R.H. Pawl (Mech.)	1574607	1	1	
4	223	Spring, Roller Latch (Mech.)	1584498	1	1	
4	225	Spring, Retrieve (Mech.)	1491448	1	1	
4	233	Spring, Handle Return (Mech.)	1491497	1	1	
4	234	Spring, Trip (Mech.)	1491444	1	1	
5,7	369	Spring, Reset (A.-S.-Close)	1574792	1	1	
6	280	Spring, Return (hold-in)	1589329	1	1	
7	350	Coil, Closing	NOTE #1		1	
8	302	Magnet, Blowout (Relay)	1589340		1	
8	303	Contact, Moving (Relay)	1589495		2	
8	304	Contact, R.H. Stat. (Relay)	1589492		1	
8	304	Contact, L.H. Stat. (Relay)	1589493		1	
8	314	Spring, Contact (Relay)	1491306		1	
8	312	Spring, Contact Arm (Relay)	1574332		1	
8	313	Spring, Trip (Relay)	1533822		1	
8	338	Coil (Relay)	NOTE #1		1	
8	334	Spring, Latch (Relay)	1491484		1	
9	262	Spring, Weight (A.-S.-Open)	1404668	1	1	
9	263	Spring, Plate (A.-S.-Open)	1574793	1	1	
10	410	Spring, Calibration (O.C.)	1574796	2	2	
10	420	Spring, Instantaneous (O.C.)	NOTE #1	1	1	
10	430	Spring, Short Time Delay (O.C.)	NOTE #1	1	1	
13	508	Spring, Reset (shunt Trip)	1491282	1	1	
13	513	Coil (Shunt Trip)	NOTE #1	1	1	
14	612	Spring, Calibration (Reverse Current)	1533830	1	1	NOTE #3
17	623	Coil, Potential (Reverse Current)	NOTE #1	1	1	NOTE #3

NOTE #1 Manufacturer's style number for these items may be found in Spare Parts List furnished with individual circuit breaker order. Style number may also be obtained by writing to manufacturer's representative giving complete circuit breaker nameplate data.

NOTE #2 For a two pole breaker, quantity of spare parts supplied for these two items is two each.

NOTE #3 Spare parts for D-C circuit breakers equipped with reverse current protection only.

NOTE #4 These quantities are on the basis of a single circuit breaker installed per vessel. Refer to Spare Parts List furnished with individual circuit breaker order for quantity of spare parts supplied when two or more circuit breakers are installed per vessel.