TYPE

G-50-A

Air Circuit Breakers

INSTRUCTION BOOK and PARTS LIST

ALLIS-CHALMERS

G-50-A

THIS instruction book has been designed in this unusual manner for the express purpose of making it easy for you to obtain all necessary information for the installation, operation, maintenance and repair of Allis-Chalmers Type G-50-A Air Circuit Breakers.

The placing of illustrations opposite the reading matter eliminates continuous page turning when reference is made to a specific illustration. We hope that this manner of presentation will give you all the required information with a minimum expenditure of time and effort.

We suggest you read it carefully and keep it on hand for future reference. If additional information is required, it may be obtained upon request to the factory.

7. Recommended Service Parts

When ordering spare parts give serial number of the breaker or breakers to insure delivery of proper parts.

Fig. No.	Item No.	Part	Drwg. No.	Quan. for 1 Brkr.	Quan. for 6 Brkrs.	Quan. for 10 or more Brkrs
2	3	Arc Chute Assembly	18-346-830-501	1	2	4
5	14	Arcing Contact (Movable)	18-249-008-501	3	9	12
5	2	Stationary Arcing Contact Assembly	18-249-007-501	1	2	4
5	10	Tertiary Contact Assembly—Movable	18-150-201-501	1	2	4
5	9	Tertiary Contact Assembly—Stationary	18-150-204-501	1	2	4
5	11	Main Contact Block—Movable (3 per pole)	18-249-012-501	2	4	6
5	20	Guide Pin (For Arcing Contact)	18-150-219-001	2	4	6
5	12	Guide Pin (For Main Contact)	18-140-081-001	2	4	6
5	8	Connector Assembly	18-150-217-501	3	6	9
5	37	Contact Arm Assembly	18-443-040-501	—	1	2
6	5	Bumper Pad	18-140-303-001	6	12	18
7	14	Knob Assembly	18-140-528-501	—	1	2
6	30	Extension Spring	18-140-145-501	—	1	2
6	19	Extension Spring	18-140-154-003	—	1	2
5	32	Spring Part 11	18-633-502-011	4	8	12
5	17	Spring Part 12	18-633-502-012	2	4	6
5	28	Spring Part 13	18-633-502-013	1	2	3
—	—	Dash Pot Oil (Spec. 18-140-204)	18-140-204-503	½ Pint	½ Pint	1 Pint
2	34	Contact Finger Assembly (Secondary)	18-244-421-501	—	—	1
2	26	Contact Finger Assembly Primary Disconnect:				
		(600 Amps or Less) Drawout	18-337-177-501	—	—	6
		(800-1000-1200 Amps) Drawout	18-337-177-502	—	—	6
		(1600 Amps) Drawout	18-337-177-803	—	—	6
9	11	Shunt Trip Coil:				
		24 volt dc	18-341-280-503	—	1	2
		48 volt dc	18-341-280-502	—	1	2
		125 volt dc	18-341-280-501	—	1	2
		250 volt dc	18-341-280-504	—	1	2
		110 volt ac—60 cy.	18-341-280-505	—	1	2
		208 or 220 volt ac—60 cy.	18-341-280-506	—	1	2
		550 volt ac—60 cy.	18-341-280-507	—	1	2
3	13	Closing Coil:				
		48 volt dc	18-683-650-501	—	—	1
		125 volt dc	18-244-297-501	—	—	1
		250 volt dc	18-244-297-502	—	—	1
4	23	"X" Relay:				
		48 volt dc	18-107-128-003	—	—	1
		125 volt dc	18-107-128-001	—	—	1
		250 volt dc	18-107-128-002	—	—	1
		220 volt ac	18-107-107-001	—	—	1
4	21	"Y" Relay:				
		48 volt dc	18-151-462-003	—	—	1
		125 volt dc	18-151-462-002	—	—	1
		250 volt dc	18-151-462-001	—	—	1
		220 volt ac	18-107-065-001	—	—	1
3	17	Rectifier (for ac control voltage)	18-245-910-501	—	—	1
3	19	Resistor (for ac control voltage)	18-148-191-501	—	—	1

INDEX

Page No.

1. General Information 2
   - A. Introduction 2
   - B. Warranty 2
2. Receiving 2
   - A. Unloading 2
   - B. Inspection for Damage in Shipment 2
   - C. Storing 2
3. Installing 3
   - A. Mounting 3
4. Operating 3
   - A. Inspection 3
     - 1. General 3
   - B. Pantograph and Interlock Trip Adjustment for Drawout Type Breakers 3
   - C. Mechanism Adjustment Check 3
   - D. Contact Arm Adjustment 3
   - E. Trip Armature and Suction Cup Assembly Adjustment and Calibration 4
   - F. Trip Bar Adjustment 4
   - G. Energizing Breaker 4
5. Maintenance 4
   - A. General 4
   - B. Periodic Inspection 4
   - C. Movable Arcing Contact 4
     - 1. Replacement 4
     - 2. Adjustment 4
   - D. Movable Tertiary Contact 5
     - 1. Replacement 5
     - 2. Adjustment 5
   - E. Movable Main Contact 5
     - 1. Replacement 5
     - 2. Adjustment 5
   - F. Replacement of Stationary Arcing Contact 5
   - G. Replacement of Stationary Tertiary Contact 5
   - H. Series Trip Armature and Suction Cup Assembly 5
   - I. Replacement of Series Overload Coil and Connector Assembly 6
   - J. Replacement of Flexible Connector 6
   - K. Control Equipment 6
   - L. Manual Operating Mechanism 6
   - M. Electrical Operating Mechanism 6
   - N. Relays 7
   - O. Auxiliary Switches 7
   - P. Shunt Trip Attachment 7
6. Special Accessories 7
   - A. Undervoltage Trip Attachment 7
     - 1. Adjustment for Time Delay 7
   - B. Control Station 8
   - C. Door Interlock 8
   - D. Bell Alarm and Electrical Lockout Switch 8
7. Recommended Service Parts 9

1. General Information

A. INTRODUCTION

Type G-50-A air circuit breakers constitute a line of low voltage air breakers which may be used in metal enclosed switchgear, on open type switchboards, or separately mounted in individual housings. The G-50-A air circuit breaker has an interrupting capacity of 50,000 amperes and a maximum normal current rating of 1600 amperes at 600 volts, 25-60 cycles. For information on other frequencies consult factory. All G-50-A breakers are completely assembled, tested and calibrated at the factory in a vertical position and must accordingly be mounted in a vertical position to operate properly. Customer's primary connections should be braced to prevent overstressing the breaker terminals.

B. WARRANTY

Allis-Chalmers G-50-A air circuit breakers are warranted to be free of defects in material and workmanship for a period of one year after delivery to the original purchaser. This warranty is limited to the furnishing of any part which to our satisfaction has been proven defective. Allis-Chalmers will not in any case assume responsibility for allied equipment of any kind.

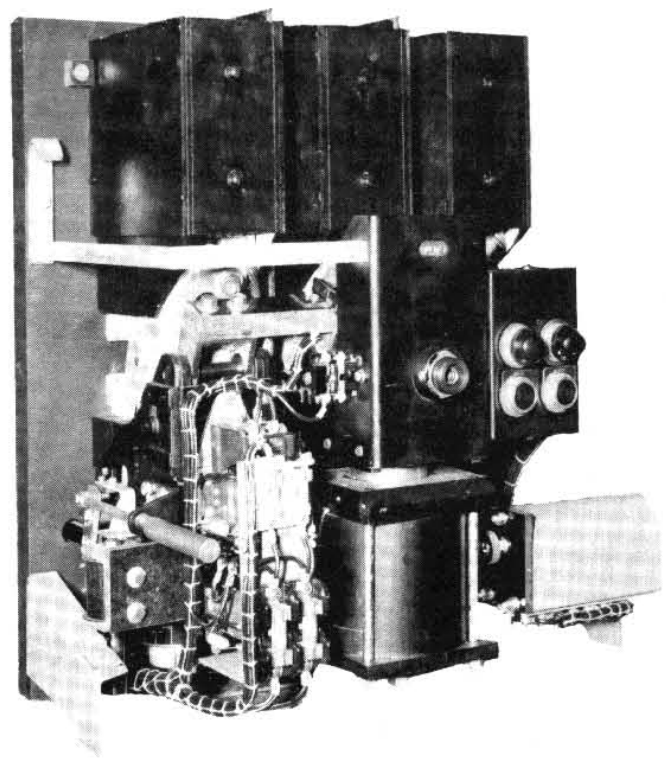

Electrically Operated

2. Receiving

A. UNLOADING

Each air circuit breaker is carefully inspected before leaving the factory. Breakers that are shipped separately are packed by men experienced in the proper handling and packing of electrical equipment. Breakers mounted in metal enclosed switchgear are usually shipped mounted in the circuit breaker compartments.

When unpacking crated breakers, boxing should be removed carefully to avoid bending, breaking or damaging of any parts. Check all parts with packing list. Clean all parts thoroughly and before disposing of packing box be sure all loose parts, etc. are removed. Keep instruction book and tags with the breaker.

B. INSPECTION FOR DAMAGE IN SHIPMENT

Carefully inspect the breaker for damage which might have been caused in shipment. If damage is found, claim should be made immediately with the carrier and Allis-Chalmers should be notified.

C. STORING

Where equipment is not to be put into immediate use, breakers should be carefully wrapped or covered so that they are protected from plaster and other dust particles. Abrasive dust in the breaker mechanism will eventually cause excessive friction and rapid wear. Breakers should not be exposed to the action of corrosive gases and moisture. In high humidity areas, space heaters or the equivalent should be provided. G-50-A air circuit breakers should be handled carefully at all times. Shock or jars from rough handling can cause serious damage.

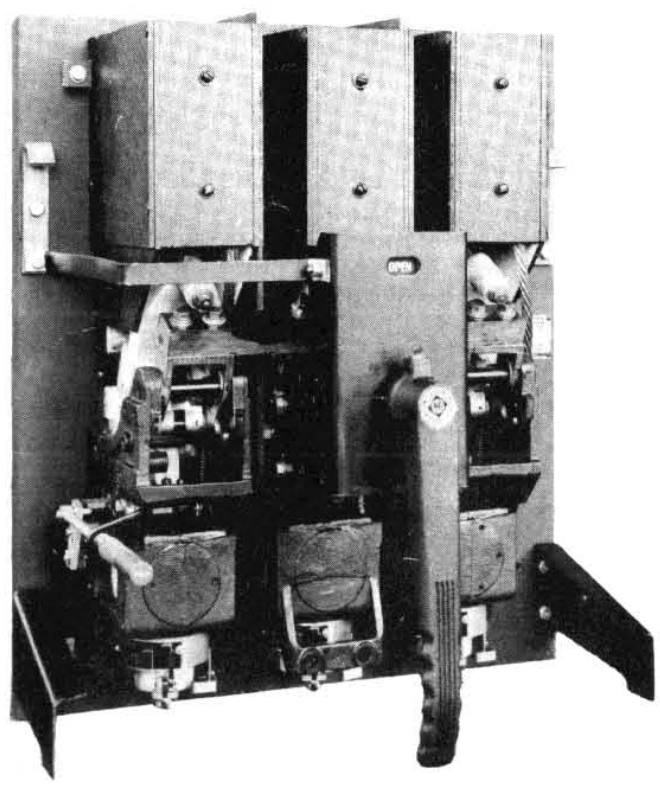

Manually Operated

3. Installing

A. MOUNTING

The G-50-A breaker is completely adjusted and checked at the factory and no additional adjustment should be necessary when installing.

Indoor circuit breakers should be installed in a clean, dry, well-ventilated place in which the atmosphere is free from destructive acid or alkali fumes. Mount open type breakers high enough to prevent injury to the operator either from arcing or from moving parts during automatic opening of the breaker. Allow sufficient space so the breaker is accessible for cleaning and inspection. Also allow a minimum clearance of 2 inches from top of the breaker panel to an insulating barrier above the breaker to prevent damage from arcing.

4. Operating

A. INSPECTION

1. General

Breaker should be given a final inspection before being placed into service to see if any adjustments or connections have loosened in shipment or handling. Before installing a breaker, make certain it is in the open position. After breaker is in position, manually close it cautiously to check for damage to the mechanism or the contact arm. (Caution: *Make sure circuit is not energized*). Breaker should close smoothly with increasing resistance until fully closed. In closing the manually operated breaker, the handle (see Fig. 2, Item 20) is first turned counterclockwise as far as it will go to relatch mechanism and then it is rotated clockwise until the breaker closes. Handle is removed by pulling up on the pin assembly (Figure 2, Item 15) at the top of the handle and pulling the handle out. It may then be inserted at any of four angles most convenient for operator to close breaker.

When closing the electrically operated breaker manually, the emergency closing handle, one of which is provided with each installation, should be inserted with push against spring pressure until handle shaft keys into gear. This breaker is already in the relatch position due to the relatching spring in the solenoid. To close the breaker, turn handle clockwise until breaker closes.

The inspection described above should be carried out periodically to insure continuous satisfactory operation of the breaker.

B. PANTOGRAPH AND INTERLOCK TRIP ADJUSTMENT FOR DRAWOUT TYPE BREAKERS

After the breaker is closed it should be racked into the unit. The breaker should trip shortly after the face of the breaker panel passes the test position indicator on the base of the compartment. Rack the breaker all the way into the unit. The face of the breaker panel should then be in the same plane as the operating position indicator. Close the breaker and try cranking out pantograph. After approximately two turns of the crank the breaker should trip. At this point disconnect fingers (Fig. 2, Item 26) should still be making full contact with the stationary stud. If interlock does not operate as described above adjust as follows:

Turning adjusting screw (Fig. 2, Item 25) will raise or lower the trip interlock bar and retard or advance tripping operation. The correct setting requires approximately 2⅝ inches distance between the head of the adjusting screw and the bearing surface of the lug on the back of the breaker panel. However, the breaker must trip before the disconnect contacts part. This drawout interlock is factory set by a fixture, and should not require adjustment in the field; however, it should be checked before placing the unit in operation.

C. MECHANISM ADJUSTMENT CHECK

The operating mechanism is factory adjusted and tested. Most of its pins are locked in place with dog point set screws. Some of those set screws are held in place with red glyptol lacquer. If for any reason any of these set screws are loosened or removed, they should be reset with glyptol lacquer or some similar material.

Following is a description of the possible adjustments on the mechanism. Fig. 6A Item 10 is an adjusting screw locked with a nut which limits the closing lever motion (Item 11) in the relatching operation. If this adjusting screw is set too short the mechanism overtravels its relatch position and does not stay latched on the rebound. If the adjusting screw is set too long it will prevent the mechanism from relatching. The setting, however, is not too critical and can be easily adjusted.

D. CONTACT ARM ADJUSTMENT

To check the contact arm adjustment, first remove arc chutes (Fig. 2, Item 3) by removing 2 arc runner screws (Fig. 2, Item 5) thus freeing arc runner with flexible cable. Arc chutes may then be lifted up and off. With arc chutes removed a view of the contact arms is possible. Cautiously start manual closing operation until arcing contacts (Fig. 5, Items 2 and 14) just touch. In this position all three arcing contacts should be touching simultaneously. If this is not the case, adjustment has been lost and the arcing contacts should be realigned by adjusting the two jam nuts (Item19) on the back of the contact arm, in or out until all arcing contacts make contact with the stationary portion at approximately the same instant. (Check with .005″ feeler). Caution: do not completely close breaker or use manual

trip in this adjusting operation because the flexible cable (Fig. 2, Item 8) is not in its proper position and may be seriously mutilated or possibly sheared off if caught between a moving part in the tripping operation. With the arcing contacts just touching, the tertiary or intermediate contacts (Fig. 5, Items 9 and 10) should be within ⅛" of touching. To check use ⅛" thick feeler and if necessary adjust locknuts (Item 29) in or out until all three pole tertiaries are within ⅛" of touching. The main contacts (Fig. 5, Items 11 and 41) should be within 5/32 inches of touching at the *upper* main contact. Use a 5/32 inch feeler to check all main contacts and if necessary adjust elastic stop nut (Item 13) in or out until this spacing is maintained. This elastic stop nut should be set with glyptol lacquer or similar material after any adjustment. To further check sequence, continue to close breaker until tertiary contacts just touch. At this point main contacts should be within ⅛ inches of being closed at the upper main contact. Cautiously allow contact arms to move back into the completely open position by letting the handle rotate counterclockwise. Arc chutes may now be reassembled by placing into position and remounting the arc runner with flexible cable. After arc chutes are in place, start closing operation slowly to see that moving parts clear the arc chutes and arc runner. Arc runner should have approximately .020 inch clearance above the tip of the moving arcing contact (see Fig. 5, Item 14).

E. | TRIP ARMATURE AND SUCTION CUP ASSEMBLY ADJUSTMENT AND CALIBRATION

Now check the series trip mechanisms. Release the cup (Fig. 7, Item 8) and armature (Item 2) by loosening the wing nut (Item 12). Swing wing nut out to allow cup holder (Item 13) to drop. Hold cup in position until cup holder is swung out of the way. Cup with armature in it will then slide out. Be careful not to drop or jar the cup and armature for the lapped surfaces of the oil sucker discs (Items 9 and 10) may be damaged.

Insert armature back into position aligning slot of armature with tongue projecting from upper cup housing (Item 4). See that armature moves up and down freely. Remove wax paper washer from cup and clean cup, armature, and discs by washing with alcohol. Be sure all parts are dry and free from dust, lint and foreign particles. Fill cup (Item 8) with dashpot oil (18-140-204) to level indicated by groove (about ¼" from bottom) inside of cup. Set armature carefully into cup and insert into position on the breaker. Bring cup holder and wing nut back into position to hold cup. Be sure that gasket (Item 5) is in position over the flange of the cup. Before tightening the wing nut, rotate cup so that the desired ITL (inverse time lag) marking on the cup is in line with the indicating pointer (Item 11); tighten wing nut. A bottle containing enough oil (18-140-204) for the first filling is attached to the breaker. Do not interchange parts of one series trip mechanism with that of another pole on breaker. The series trip device is calibrated at the factory with its individual pole piece and an interchange of parts may result in calibration errors.

F. | TRIP BAR ADJUSTMENT

The trip bar consists of three bakelite pieces (Fig. 1, Item 7) interlocked so that a tripping action of any pole will always trip the center pole mechanism. The R. H. has an adjusting screw (see Fig. 1, Item 9 for R.H. pole adjustment) to adjust the sensitivity of the tripping action. This adjusting screw is locked in place with a jam nut and is factory adjusted. When breaker is closed there should be a slight clearance between the center and R.H. trip bars. If the clearance is too great the breaker may not trip out on low overcurrents. If the clearance is not sufficient the breaker may not latch in.

G. | ENERGIZING BREAKER

The breaker is now ready to be energized. The drawout type may be cranked into position and the stationary type may be hung in its permanent position.

Once the breaker is energized it should not be touched, except for operating, because most of the component parts are also energized.

5. Maintenance

A. | GENERAL

Occasional checking and cleaning of breaker will insure continuous satisfactory operation. If any oiling or greasing is done it should be done with care because excess oil and grease tend to collect dirt which would then adhere to the breaker and might cause flashovers.

B. | PERIODIC INSPECTION

A periodic inspection should be included in the breaker maintenance routine. An annual inspection is sufficient but in cases where unfavorable atmospheric or climatic conditions exist, more frequent inspections are recommended. Inspect complete breaker for foreign material, dirt, etc. Make certain that dashpot oil is clean and at the proper level.

C. | MOVABLE ARCING CONTACT REPLACEMENT AND ADJUSTMENT

1. Replacement

Should replacement of movable arcing contact (Fig. 5, Item 14) be necessary, remove cotter pin (Item 16) on side of pin (Item 15) and remove pin. Loosen set screw (Item 7) and remove pin (Item 22). Swing arcing contact forward so that screws (Item 24) can be removed. Replacement is in reverse sequence of removal. Jam nuts (Item 19) are threaded in or out so that arcing contact makes at the same instant as those of the other two poles, and in proper relation to tertiary and main contacts.

2. Adjustment

See contact arm adjustment page 3. The arcing contacts

(Item 14) are factory adjusted to provide proper contact and sequence of operation. The arcing tips consist of a silver tungsten alloy to resist mechanical wear and arc erosion. With normal maintenance tips should give long and satisfactory operation.

D. MOVABLE TERTIARY CONTACT REPLACEMENT AND ADJUSTMENT

1. Replacement

Should replacement of movable tertiary contact (Fig. 5, Item 10) be necessary, remove jam nuts (Item 29); and by using a wrench across the flats of the backing head of the contact tip the tertiary contact can be screwed out of the special nut (Item 26) and pulled out. If care is taken, all the remaining parts will remain in position, due to compression of spring (Item 28) and the replacement contact can be threaded back into position in reverse sequence of removal. The jam nuts are adjusted in or out so that the contact makes at the same instant as the other two poles and in proper relation to the arcing and main contacts.

2. Adjustment

See contact arm adjustment page 3. The tertiary contacts (Item 10) are factory adjusted to provide proper contact pressure and sequence of operation. The contact tips consist of a silver, tungsten carbide alloy to resist mechanical wear and arc erosion and with normal maintenance should give long satisfactory operation.

E. MOVABLE MAIN CONTACT REPLACEMENT AND ADJUSTMENT

1. Replacement

In order to replace the movable main contact (Fig. 5, Item 11) it will be necessary to first remove the complete contact arm assembly (Fig. 5, Item 37). Contact arm assembly can be removed by loosening set screw (Item 38) and removing pin (Item 39). Then loosen cotter pin (Item 30) and remove pin (Item 31). Disconnect the flexible connector (Item 33) by removing the hexagon head screws (Item 36). Disconnect the two springs (Fig. 2, Item 19). The contact arm assembly is now free and can be separated from the breaker assembly.

The movable main contacts can now be removed from the contact arm assembly by removing hexagon elastic stop nuts (Fig. 5, Item 13) by using a socket wrench.

Replacement is in reverse sequence of dismantling.

When new main contacts are placed on the contact arm assembly customer must provide means of overcoming spring compression so that elastic stop nuts (Item 13) can be started on studs. After complete reassembly the elastic stop nut is adjusted in or out so that contacts will make at the same instant all remaining main contacts on breaker make and in correct relation to the tertiary and the arcing contacts of its pole.

2. Adjustment

See contact arm adjustment page 3. The movable main contacts (Fig. 5, Item 11) are factory adjusted to provide proper contact pressure and sequence of operation. The contact tips consist of a silver nickel alloy to insure good conductivity and with normal maintenance should give long and satisfactory operation.

F. REPLACEMENT OF STATIONARY ARCING CONTACT

Should replacement of a stationary arcing contact (Fig. 5, Item 2) be necessary, remove the arc chute (see section D, page 3) and unscrew two socket hd. cap screws (one behind and one within panel slot) (Items 3 and 42) which secure it to the top terminal (Item 5). Arcing contact is now free for replacement.

G. REPLACEMENT OF STATIONARY TERTIARY CONTACT

Should replacement of a stationary tertiary contact (Fig. 5, Item 9) be necessary, merely bend down corners of locking strip (Item 40, front side of panel). Then, by using a wrench across the flats of the backing head of the contact tip, the stationary tertiary contact (Item 9) can be screwed out from the top terminal (Item 5).

H. SERIES TRIP ARMATURE AND SUCTION CUP ASSEMBLY

The inverse time series overcurrent trip (Fig. 7) consists of a trip armature and suction cup assembly. The suction cup assembly provides for adjustment for the inverse time delay and is of the oil film sucker type. Figure 7 shows the arrangement of the parts and Figure 13 gives the characteristic time delay curves.

Before the breaker leaves the factory the series trip device is adjusted for 100 percent load and 100 percent inverse time lag. At this setting the breaker will just trip at about 100 percent load if there is no oil in the cup. With clean oil (18-140-204) in the cup to the indicated level (groove inside of cup), the breaker will follow approximately the 100 percent load, 100 percent inverse time lag (I.T.L.) curve shown on Figure 13. The I.T.L. setting can be changed by loosening the wing nut (Fig. 7, Item 12) and then turning the cup (Item 8) to the desired I.T.L. value as indicated by the pointer (Item 11) which lines up with I.T.L. percentage markings on the cup. The wing nut should then be tightened, clamping cup into this position.

To adjust the load setting, loosen knob (Item 14) and rotate lower cup housing (Item 7) until the desired load setting, as shown on the calibration label (Item 15), lines up with the pointer (Item 6). Tighten knob to clamp lower cup housing into position (a serrated washer locks the cup housing into position).

Any value of the current 10 to 12 times normal rating causes practically instantaneous tripping.

The oil in the cups of the I.T.L. attachment should be renewed with clean dashpot oil (18-140-204) at least once a year (oftener if dusty conditions prevail). When renewing dashpot oil, the cup and discs should be washed with alcohol. When replacing lower disc (Item 10), make sure the vellumoid washer is in place. The proper function of this device depends upon the sealing of the lapped surfaces of the discs (Item 9 and 10). Therefore, these parts must be kept free of lint, dust and other foreign particles.

Be sure to replace all parts to the original pole for which they were factory calibrated. An interchange of parts from one pole to another will cause calibration errors.

When required, an instantaneous trip armature is available. This armature may be substituted for the standard inverse time armature (Fig. 7, Item 2). The instantaneous trip armature trips the breaker at its particular setting without any time delay.

When required, a definite time delay armature is available. This armature may be substituted for the standard inverse time armature (Fig. 7, Item 2). The definite time delay armature gives inverse tripping time up to and between 200 and 300% of normal operating current and definite time delay above the 200 or 300% current value.

I. REPLACEMENT OF SERIES OVERLOAD COIL AND CONNECTOR ASSEMBLY

The series overload coil and connector assembly (Fig. 2, Item 28) is designed for easy replacement or "rating change." First remove the trip armature and suction cup assembly (see Instruction E, page 4), the lower cup housing (Fig. 7, Item 7), the upper cup housing (Fig. 7, Item 4) and armature stop (Fig. 7, Item 1). Then remove coil mounting hardware (Fig. 2, Items 27 and 31) and the series overload coil is free to be removed from the back side of the breaker panel. Breakers in service can easily have "ratings" converted by ordering the desired current rating of overload coil assembly and trip armature and suction cup assembly from the factory.

J. REPLACEMENT OF FLEXIBLE CONNECTOR

Should replacement of connector assembly (Fig. 5, Item 8) be necessary, bend down corner of locking strip (Item 21) so that hex. half head screw (Item 23) can be removed through hole in back of contact arm assembly (Item 37). Remove tertiary contact (Item 10) as per instructions under movable tertiary contact; then pivoting arcing contact (Item 14) on pin (Item 15) so that screws (Item 24) are exposed for removal, remove screws and pull out connector assembly. Replacement is made in exact reverse sequence of removal.

K. CONTROL EQUIPMENT

The control equipment on the type G-50-A electrically operated breaker is selected to give the most satisfactory service with the least amount of maintenance and is designed so that necessary servicing is accomplished with minimum dismantling.

All of the electrical control equipment except shunt trip is protected by fuses (Fig. 4, Item 20). A knife switch (Item 22) opens the control circuit from the supply voltage. The shunt trip is always directly connected to the supply to insure shunt trip voltage at all times. (For control scheme see Fig. 15.)

L. MANUAL OPERATING MECHANISM

The manual operating mechanism is factory adjusted and designed to require very little maintenance outside of periodic cleaning. Refer to Fig. 6 for its function.

Starting with the breaker in the open or tripped position, see Fig. 6B, the operating handle is rotated counterclockwise to relatch the breaker. As the handle is rotated the pinion at the end of the handle shaft racks the gear sector (Fig. 6A, Item 9) upwards carrying with it the closing lever (Fig. 6A, Item 11) which pivots on pin (Item 32). This brings the roller assembly (Item 13), mounted at the other end of the closing lever on pin (Item 14), forward so as to engage operating latch assembly (Item 12). As the operating latch assembly drops behind the roller, it allows the trip latch (Item 18) to pivot clockwise on pin (Item 17) raising its back end and allowing trip finger (Item 27) to pivot on its bearing and pin (Item 26) and latch the trip latch. Thus the closing lever latches the operating latch, the trip finger latches the trip latch so the breaker is ready for closing.

In closing, the handle is turned clockwise causing the closing lever to rotate clockwise about its pin forcing the operating latch assembly to pivot about its floating center, which is now held fixed by the gooseneck of the trip latch. As operating latch pivots, pin (Item 4) tying the operating latch, the operating link (Item 3), and operating bracket (Item 6), together moves upward pushing the contact arm forward against the resistance of two springs (Item 30) and later against the resistance of the contact springs. As the closing lever (Item 11) reaches its extreme position, the closing latch (Item 15) snaps in position under the two rollers assembled on the outer ends of pin (Item 16). Pressure is maintained on the closing latch by spring (Item 19), latching the breaker in the closed position.

The tripping action is as follows: An impulse is given to the trip bar by one of the tripping devices — series trip, manual trip, or any other. This impulse is transmitted to the trip finger (Item 27), which is fastened to the center section of the trip bar forcing the trip finger out from under the trip latch roller. The trip latch, having been released, is forced to pivot counterclockwise about its pin by a component of the total spring force acting on the contact arm. The motion of the trip latch releases the floating center of the operating latch, allowing this latch to pivot about pin (Item 4) and roll off the closing latch and over, under the influence of the spring forces. The mechanism collapses back into the open position due to the spring forces reacting on the contact arm. As the operating bracket (Item 6) pivots on its fixed center, a projection on it forces the closing latch down readying the breaker for relatching.

M. ELECTRICAL OPERATING MECHANISM

The operating mechanism of the electrically operated breaker is identical to that of the manually operated breaker, except that a dc solenoid is added. It can be operated from a battery or from any other dc supply. (See Fig. 15 for control scheme). The solenoid armature is hooked to the breaker mechanism through an insulating link (Fig. 3, Item 12). The armature is connected to the link by a pin (Fig. 3, Item 11) locked in place by a set screw (Item 9). The armature closing force is adjustable by changing the gap length at the end of the armature stroke. The mechanism is properly adjusted at the factory, but if field adjustment is found necessary proceed as follows: Loosen pole plug locking screw (Fig. 3, Item 20). With breaker in closed position and force applied on closing handle to take up all slack, adjust air gap to between 1/64 inch and 1/32 inch by turning pole plug (Fig. 3, Item 14). Be sure there is a slight air gap left at the end of the armature stroke so that armature does not strike bottom clamp. After proper adjustment of air gap lock pole plug (Item 14) in place by tightening screw (Item 20).

Where dc current is not available, the breaker may be operated from an alternating current supply by adding a rectifier (Fig. 3, Item 17), an aging resistor (Item 19), and by substituting ac relays in place of dc relays. The rectifier is of the copper oxide type and has an aging characteristic which must be compensated for after it has been used for a short period. This can be done by moving the adjusting slide so as to cut out some ohmage from the aging resistor. For manual emergency operation the electrically operated breaker may be closed manually by inserting the emergency handle (Fig. 4, Item 15), and turning clockwise. This handle is used for manual operation only and must be removed at all other times.

N. RELAYS

The relays consist of an X-control relay (Fig. 4, Item 23) and a Y-cutoff relay (Item 21). The coils of the closing solenoid and the X-relay are designed for intermittent duty and must be de-energized as soon as the breaker is closed. This is done through the Y-cutoff relay which interrupts the X-relay circuit as soon as it gets energized and its normally closed contacts open up. Thus the solenoid coil becomes de-energized as soon as the X-relay contacts open up and remains de-energized even though the control switch may be held in the closed position. This prevents what is commonly called "pumping" of the breaker.

O. AUXILIARY SWITCHES

The auxiliary switch (Fig. 10) is of the rotary type and of sturdy construction. It is link connected (Fig. 1, Item 6) to operate with the breaker contacts, and it follows their position: "a" switches are closed when breaker contacts are closed and "b" switches are closed when breaker contacts are open. Auxiliary switch contacts are factory set for "a" and "b" position and designed so as to require very little maintenance. A moulded bakelite cover can be easily removed for contact inspection. The "a" and "b" positions can be interchanged in the field if desired by reassembling the rotor element.

In addition to the "a" and "b" auxiliary switches, an "aa" and "bb" auxiliary switch (Fig. 3, Item 3) is furnished with each electrically operated breaker. This switch follows the operating mechanisms. The "aa" switch is closed when mechanism is in the energized position and open when mechanism is in de-energized or open position. The function of this switch is to make the Y-relay circuit just as the mechanism is about to close and thus initiate the de-energization of the X-relay and then of the closing coil at the proper time. The "bb" switch is open when the mechanism is in the energized position and closed when the mechanism is in the relatch position. This switch may be used for a "latch check" circuit.

P. SHUNT TRIP ATTACHMENT

The shunt trip attachment (Fig. 2, Item 23) is used to trip breaker electrically from a remote point by closing its circuit either manually, through a control switch, or automatically through relay contacts. Since the shunt trip coil is designed for a momentary duty cycle, an "a" auxiliary switch is used to interrupt its circuit immediately after the breaker is tripped. Fig. 15 shows a control scheme for this shunt trip attachment.

6. Special Accessories

Special conditions of circuit breaker application require attachments of both standard and special types. These attachments are listed in the following pages and are optional, depending on customer's requirements.

A. UNDERVOLTAGE TRIP ATTACHMENT

The undervoltage trip attachment (Fig. 8) is a device which trips the breaker when the applied voltage drops below a predetermined value. With an undervoltage attachment the breaker has a positive means of tripping in the event of operating voltage failure. The energy for tripping the breaker is supplied by a preloaded spring (Item 22) which receives a slight additional loading as the armature (Item 7) picks up. The device is connected across the line through a step down transformer (Item 2) and a rectifier (Item 3). In the de-energized position, switch (Item 26) is closed allowing full voltage to be applied to the coil (Item 5) as soon as the line is energized. This causes armature (Item 7) to pick up. As the armature picks up, the switch (Item 26) opens shunting voltage through resistor (Item 4) which reduces the voltage applied to the coil (Item 5). This device is set at the factory to pick up if line voltage is 80% of normal voltage or above and will drop out if line voltage drops below a predetermined value (between 30 to 60% of normal line voltage). As armature (Item 7) drops, pivoting on pin (Item 18), adjusting screw (Item 20) pushes up on trip pin (Item 21), which in turn pushes the trip bar of the breaker up tripping the breaker. If line voltage is below 80% of normal the armature will not pick up, and the breaker being in the trip free position, cannot be closed.

To adjust the drop out value of this device (between 30 to 60% of line voltage), increase or decrease the tension on spring (Item 22) through adjusting screw (Item 23). Increase tension for a drop out at a lower percentage of line voltage and decrease tension for a drop out at higher percentage of line voltage. Keep in mind, however, that any adjustment on the tension of the spring affects the pick up value of the device. This can be compensated for through adjusting the value of the resistor (Item 4) by moving its slide to increase or decrease the resistance as the case requires. Gap adjusting screw (Item 8) controls the distance of the drop out and may also help in compensating for spring tension adjustment. Be sure lock-nuts (Item 9, 19 and 24) are securely tight after adjustment has been made.

The undervoltage rectifier (Item 3) is subject to aging and may therefore have more resistance after aging. To compensate for this, the transformer (Item 2) may have the secondary leads reconnected so that the red-yellow (red-yellow stays permanently connected) and the red leads are connected to the undervoltage device.

1. Adjustment for Time Delay

On breakers equipped with undervoltage attachments using time delay (Fig. 8) make certain that the oil cup and discs are perfectly clean. When necessary, wash the cups and discs with clean alcohol or carbon tetrachloride. Inspect the surface of the discs to make certain there are no burrs, ridges, etc., that will prevent the lapped surfaces from coming together perfectly.

The upper disc (Fig. 8, Item 14) is set on the threaded stem so when the armature (Fig. 8, Item 7) is in the picked-up position the disc surfaces just come together. This setting is important; the discs should not come together

too soon so as to hold the armature away slightly from the magnet core. Also the armature should not close the air gap without bringing the discs together.

The correct setting of the upper disc is obtained through a quarter turn adjustment of the upper disc on a threaded stem. This stem has two holes near each end. These holes are perpendicular to one another and in line with the two holes in the opposite end.

If it is desired to lower the upper disc one quarter turn (to have the surfaces come together just as the armature comes solidly against the core), remove the pin (Fig. 8, Item 17) that secures the stem to the armature. Then rotate the stem 90° and replace the pin. The upper disc is then screwed down one quarter turn and the cotter pin replaced to prevent the disc from changing its position.

If half turn adjustment is desired, it is only necessary to turn the disc a half turn as the lapped surfaces will automatically match up.

With one quarter turn adjustment, the surfaces are not matched and it is necessary to rotate the stem as described above.

When the correct position of the upper disc has been determined, push the armature to its closed position and hold for a few seconds. Then release the armature to see whether or not the discs are holding together so as to give a time delay. If no time delay or not enough is obtained, and the discs are properly aligned, it may be necessary to relap the discs to make their surfaces flat.

With properly lapped discs and properly adjusted undervoltage device a time delay as high as seven seconds has been obtained in our shops.

If desired, the discs may be tested for holding by removing the cup with its lower disc and the upper disc with its stem from the undervoltage assembly. Then with clean oil in the cup, and with a steady pull of 2.4 lbs on the stem, it should take a minimum time of ten seconds for the discs to separate after the full area of the discs is allowed to be in contact for 30 seconds.

If less than ten seconds time is obtained on above test, it is an indication that the contact surfaces of one disc, or of both, are out of flat and need relapping. If no accurate lapping facilities are available, new discs should be obtained.

B. CONTROL STATION

For local visual position indication and operation, a control station (Fig. 12) is available for mounting on the front of the breaker. The control station consists of two indicating lamps and two control pushbuttons. A red indicating lamp lights up when the breaker is in closed position and a green indicating lamp lights up on the open position. The pushbuttons are "close" and "trip" and permit local or test operation of the electrically operated breaker.

The control station for the manually operated breaker is furnished with indicating lamps only.

C. DOOR INTERLOCK

When specified, a door interlock (Fig. 3, Item 1) is available as protection against opening the enclosure door of an energized breaker. This device consists of an interlock latch attached to the tie bar of the breaker and a door interlock fastened to the inner side of the enclosure door. As the breaker closes, the latch moves to engage the door interlock, thus automatically locking the door. When the breaker is opened, the latch and the door interlock automatically disengage, allowing enclosure door to be opened.

D. BELL ALARM AND ELECTRICAL LOCKOUT SWITCH

The bell alarm and electrical lockout switch (See Fig. 11) is connected so that it closes a circuit to a bell (or other audible signalling device) upon automatic opening of the circuit breaker or it may also open the circuit controlling the closing solenoid on an automatic opening of the breaker so that the closing circuit cannot be energized until this switch is reset.

The function of the device is as follows:

When used for alarm duty the switch is wired normally open. Any automatic tripping of the breaker will close the switch by an operating cam and link assembly (Item 5) which operates the switch, closing the alarm circuit. When breaker is manually tripped the tripping action forces the latch assembly (Item 6) over so that the cam and link assembly (Item 5) does not operate the switch.

The alarm switch may be tested as follows: The normally open contacts of the switch should close when tripping breaker by lifting up on the trip bar (Item 10). Switch contacts should then open after pushing on manual trip push button (Item 11). The normally open contacts should not close when breaker is tripped by manual push button (Item 11).

When used for an electrical lockout, the switch is wired normally closed and any automatic tripping opens the circuit to the closing solenoid. The lockout switch may be tested as follows: The normally closed contacts of the switch should open when tripping breaker by lifting up on the trip bar (Item 10). Switch contacts should then close after pushing on manual trip push button (Item 11). The normally closed contacts of the switch should not open when breaker is tripped by manual push button (Item 11).

Where it is required (on circuit breakers with shunt trip) that the shunt trip opening of the breaker should not operate the bell alarm and electrical lockout switch a special tripping lever (Item 9) is used. Lifting up on this special tripping lever (Item 9) will not operate the switch.

To shut off the alarm, or to reset the lockout, the push button must be pushed in the same as if to trip the breaker manually. Thus the breaker is reset for the next closing operation.

Fig. 14
Manually Operated Air Circuit Breaker-Connection Diagram

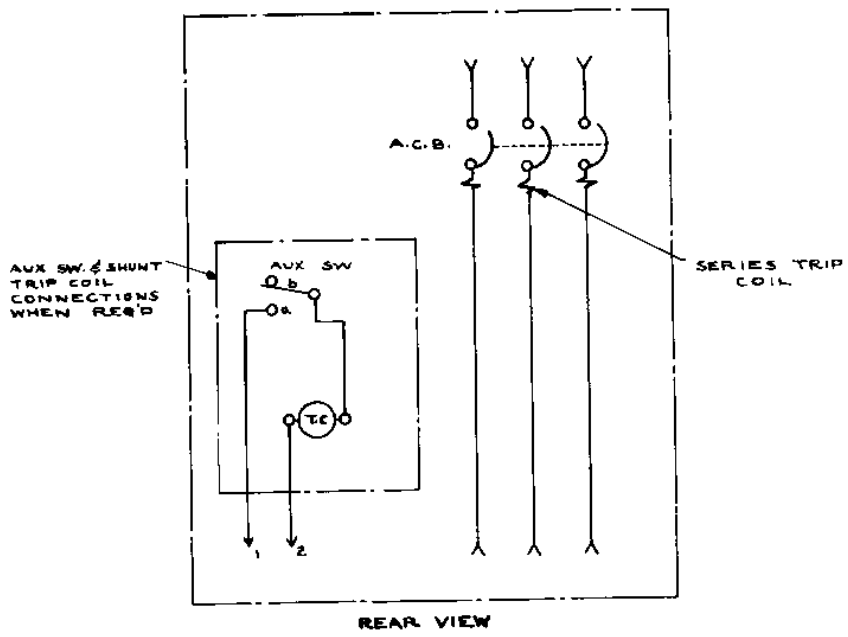

Fig. 15
Control Schemes

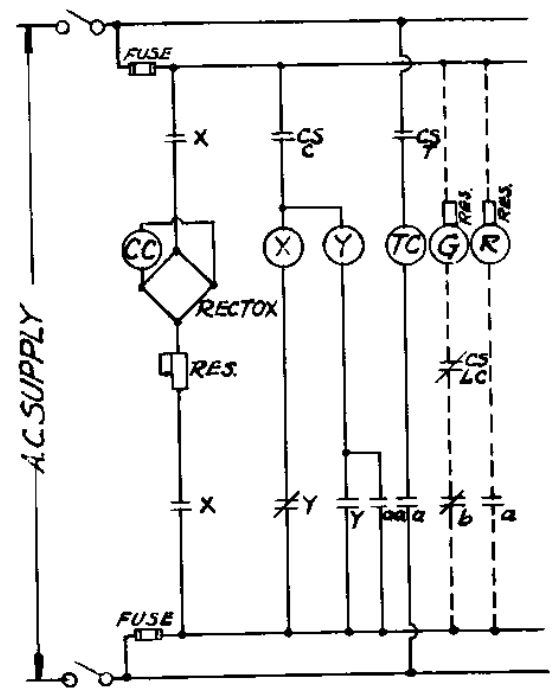

Fig 16
Under Voltage Attachment Schematic Diagram

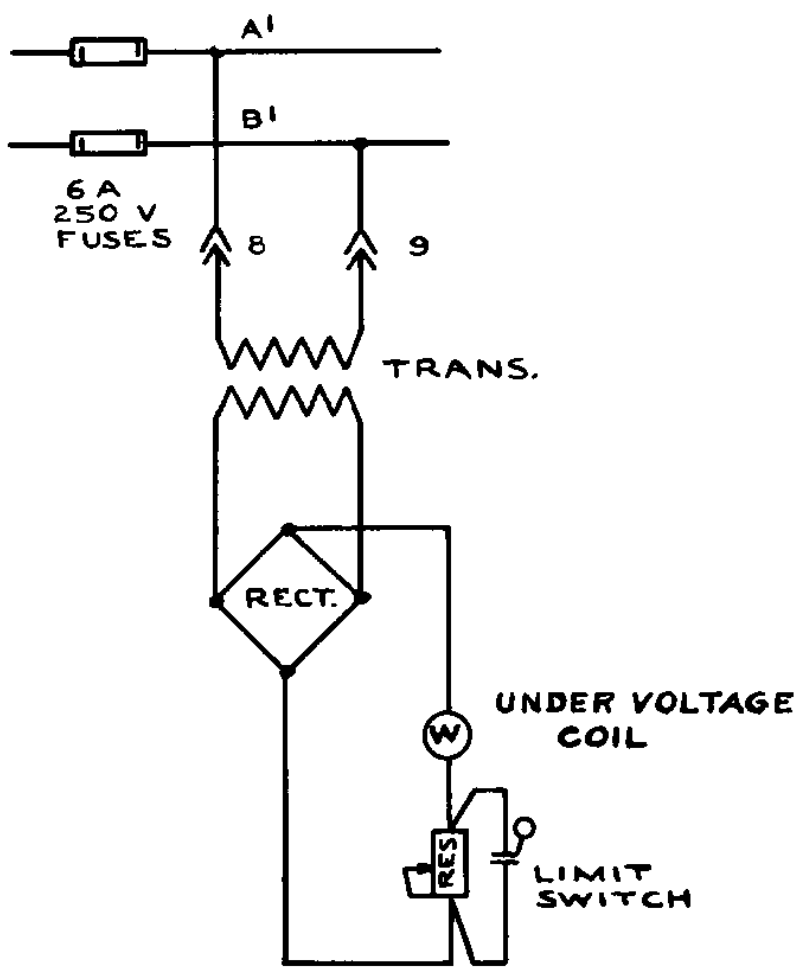

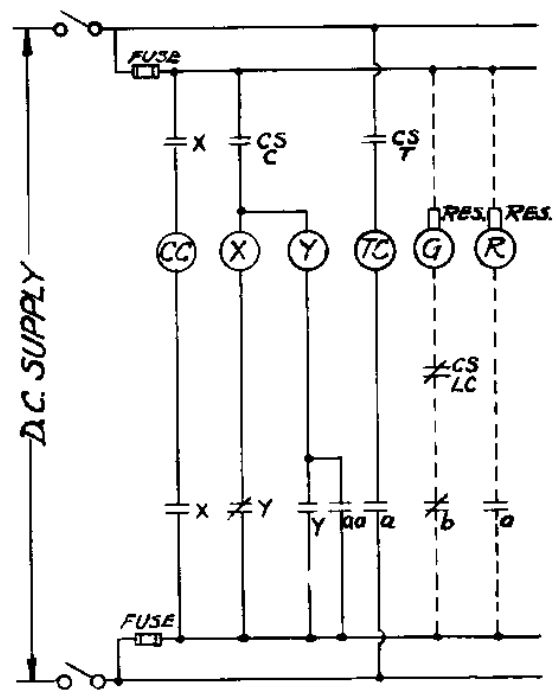

SYMBOLS

CC — Closing coil
TC — Trip Coil
XY — Control Relays
a — Auxiliary Switch
aa — Auxiliary Cut-Off Switch
b — Auxiliary Switch
R — Red Indicating Lamp
G — Green Indicating Lamp
CSC — Control Switch Close
CST — Control Switch Trip
CSLC — Control Switch Lamp Cut-out

50,000 Amperes Interrupting Capacity

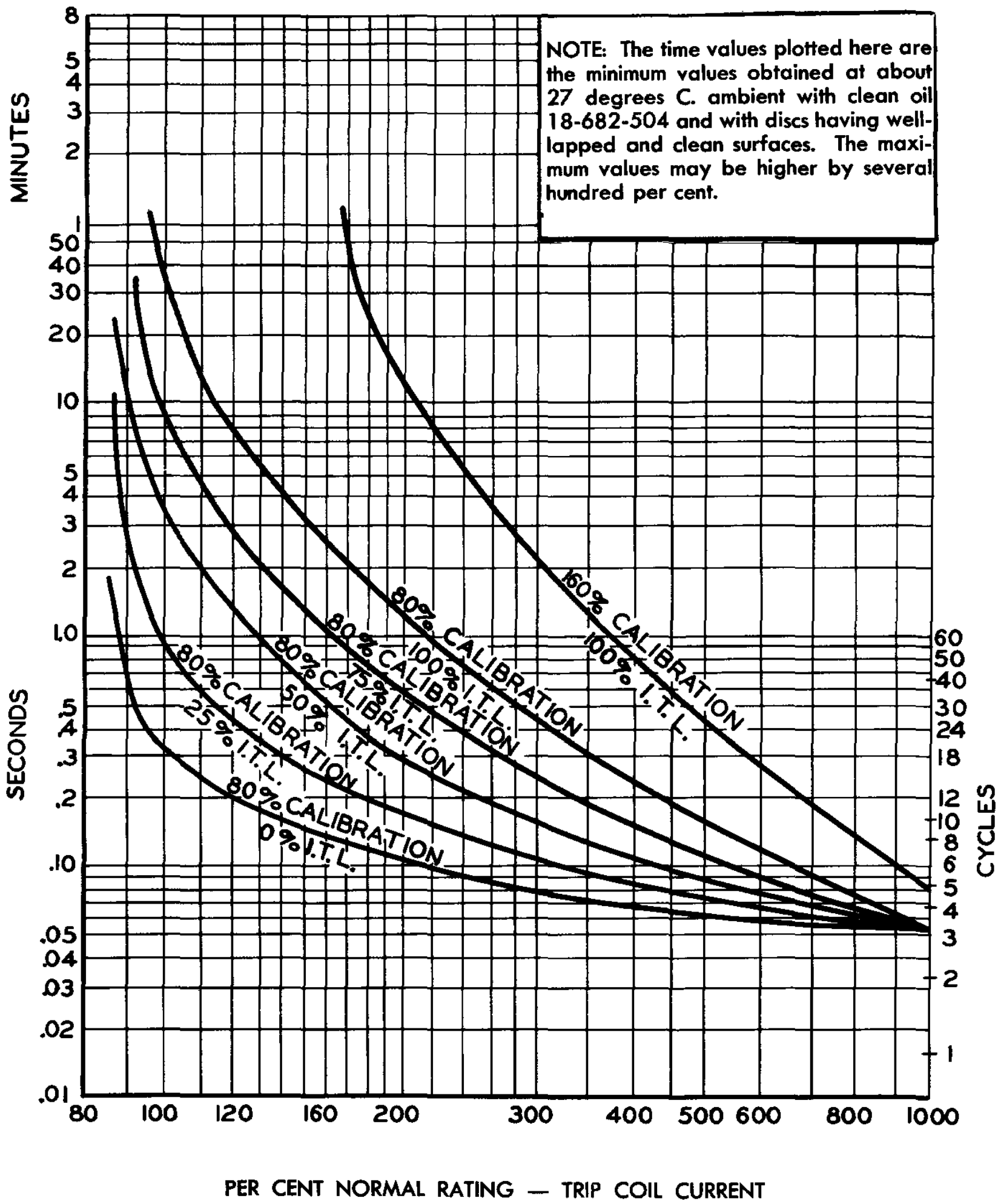

Fig. 13

I.T.L. Curves for Series Tripping Device

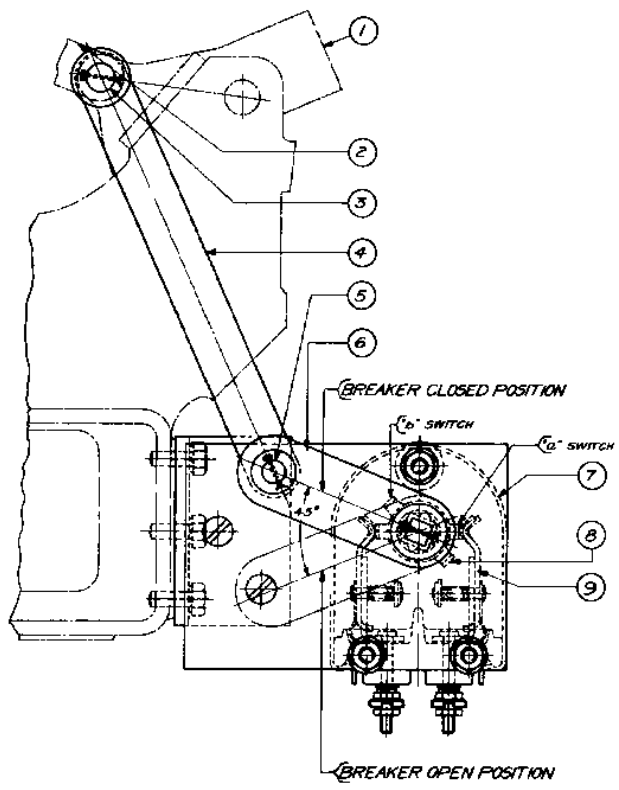

Fig. 10
Auxiliary Switch Mounting

1. Operating Bracket
2. Operating Link
3. Pin
4. Auxiliary Switch Link
5. Pin
6. Lever Arm
7. Cover
8. Rotating Contacts
9. Stationary Contacts

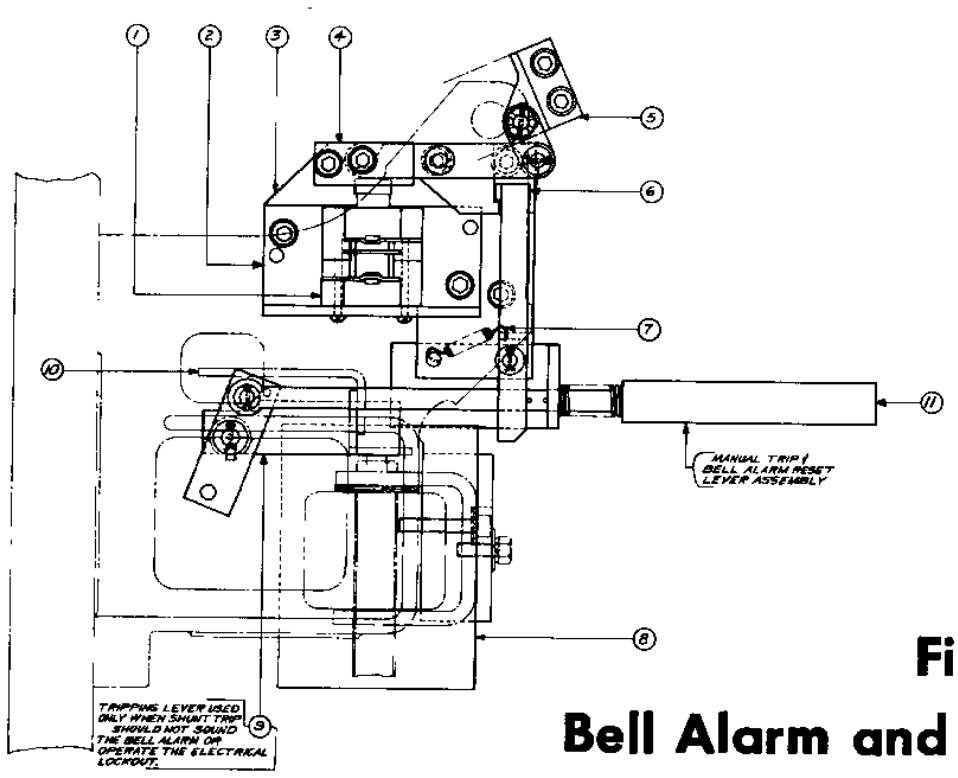

1. Push Button Limit Switch
2. Mounting Angle
3. Mounting Plate Assembly
4. Guide Block
5. Cam and Link Assembly
6. Latch Assembly
7. Spring
8. Insulation
9. Tripping Lever
10. Trip Bar Assembly
11. Manual Push Button

Fig. 11
Bell Alarm and Electrical Lookout

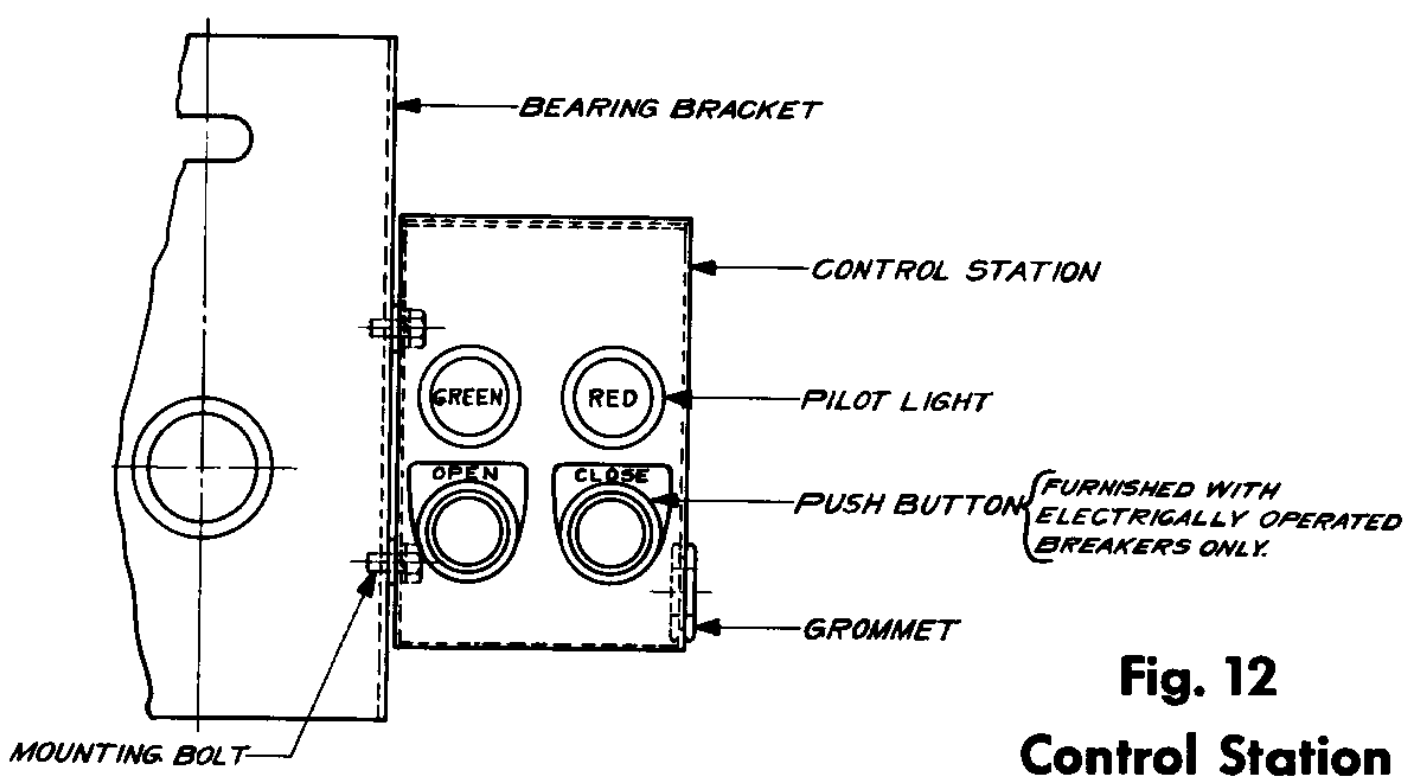

Fig. 12
Control Station

1. Panel
2. Trip Finger
3. Trip Bar Assembly
4. Manual Trip Rod
5. Support Plate
6. Groove Pin
7. Spring
8. Push Button (manual trip)
9. Tripping Unit (shunt trip)
10. Coil Yoke
11. Coil
12. Mounting Plate
13. Trip Armature
14. Set Screw
15. Adjusting Thumb Nut
16. Interlock Bracket
17. Pin
18. Adjusting Screw (interlock trip)
19. Operating Lever
20. Pin
21. Connecting Bar
22. Pin
23. Tripping Cam Assembly
24. Set Screw
25. Pin
26. Pin

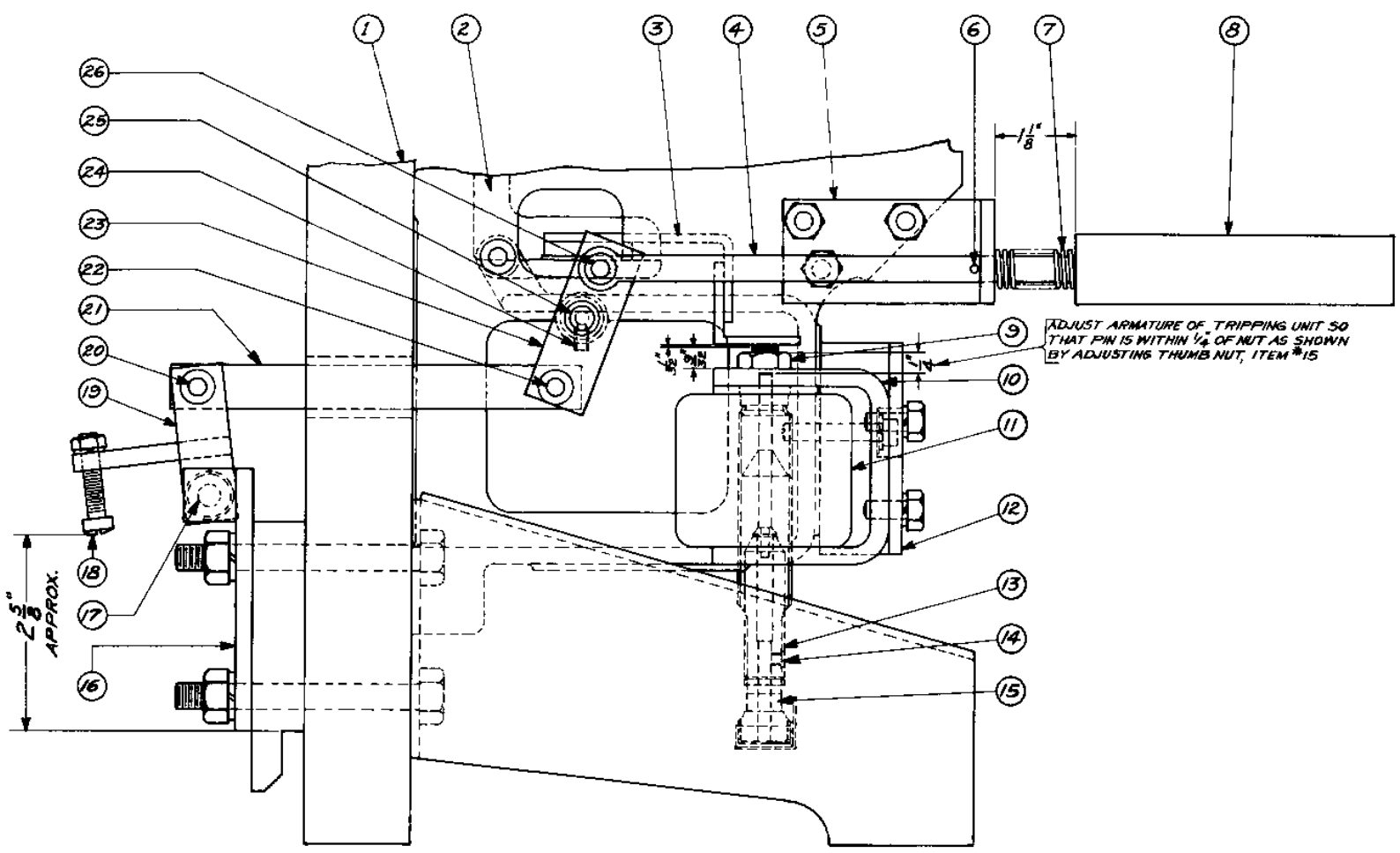

Fig. 9
Tripping Devices

1. Mounting Plate
2. Transformer
3. Rectifier
4. Resistor
5. Coil
6. Cam
7. Armature
8. Adjusting Screw (armature travel)
9. Lock Nut
10. Bracket
11. Lock Nut
12. Adjusting Screw (cam)
13. Stationary Disc
14. Moving Disc
15. Cup
16. Cup Holder
17. Pin

(13–17: For Time Delay Attachment only)

18. Pin
19. Lock Nut
20. Adjusting Screw (trip)
21. Trip Pin
22. Spring
23. Adjusting Screw (pick up)
24. Lock Nut
25. Core Assembly
26. Switch

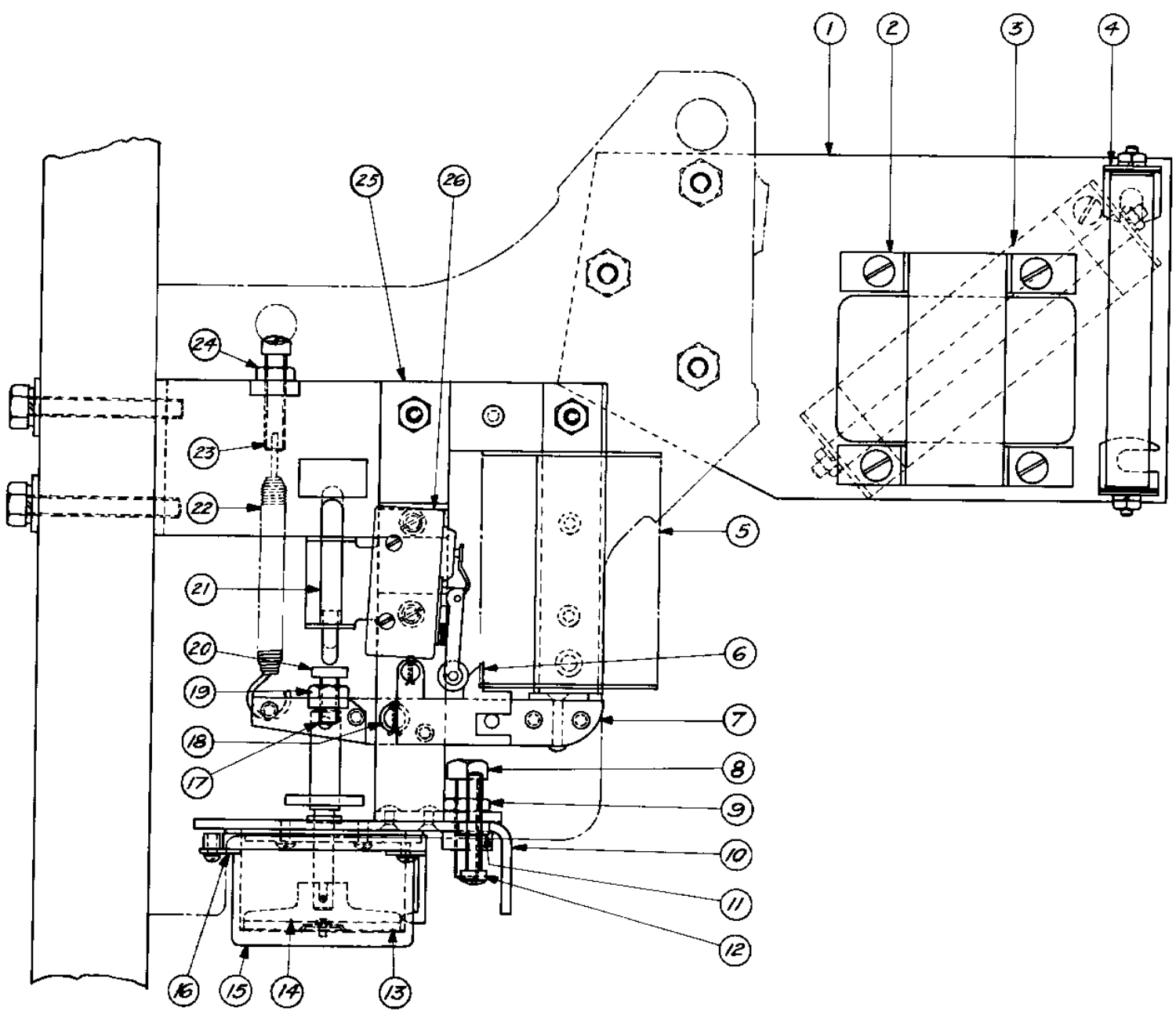

Fig. 8
Undervoltage
Trip Attachment

1. Stop
2. Trip Armature Assembly
3. Bushing
4. Upper Cup Housing
5. Gasket
6. Indicator Pointer
7. Lower Cup Housing Assembly
8. Cup
9. Upper Disc
10. Stationary Disc
11. Indicator
12. Wing Nut
13. Cup Holder
14. Knob
15. Calibration Label

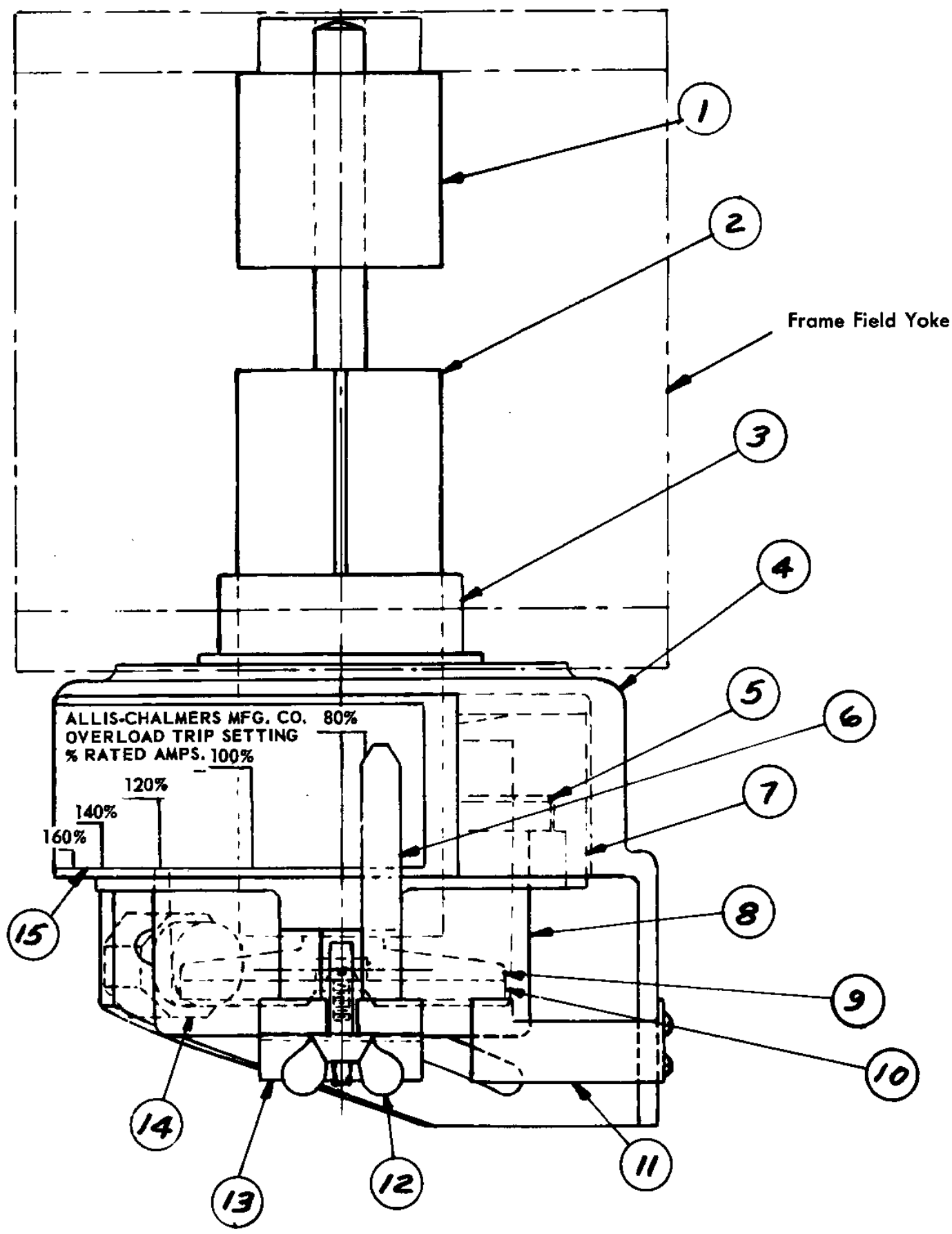

Fig. 7

Trip Armature and Suction Cup Assembly

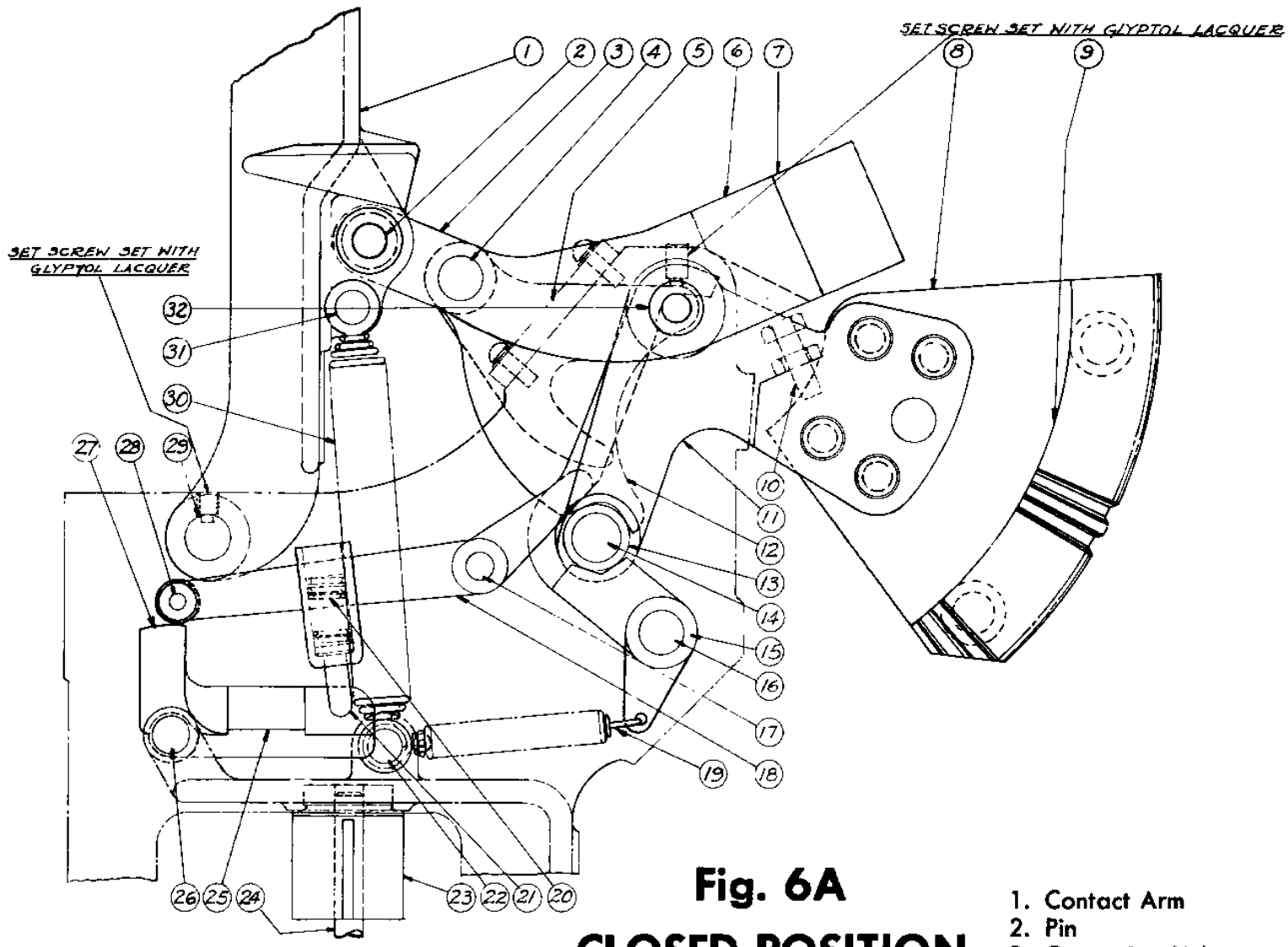

Fig. 6A
CLOSED POSITION

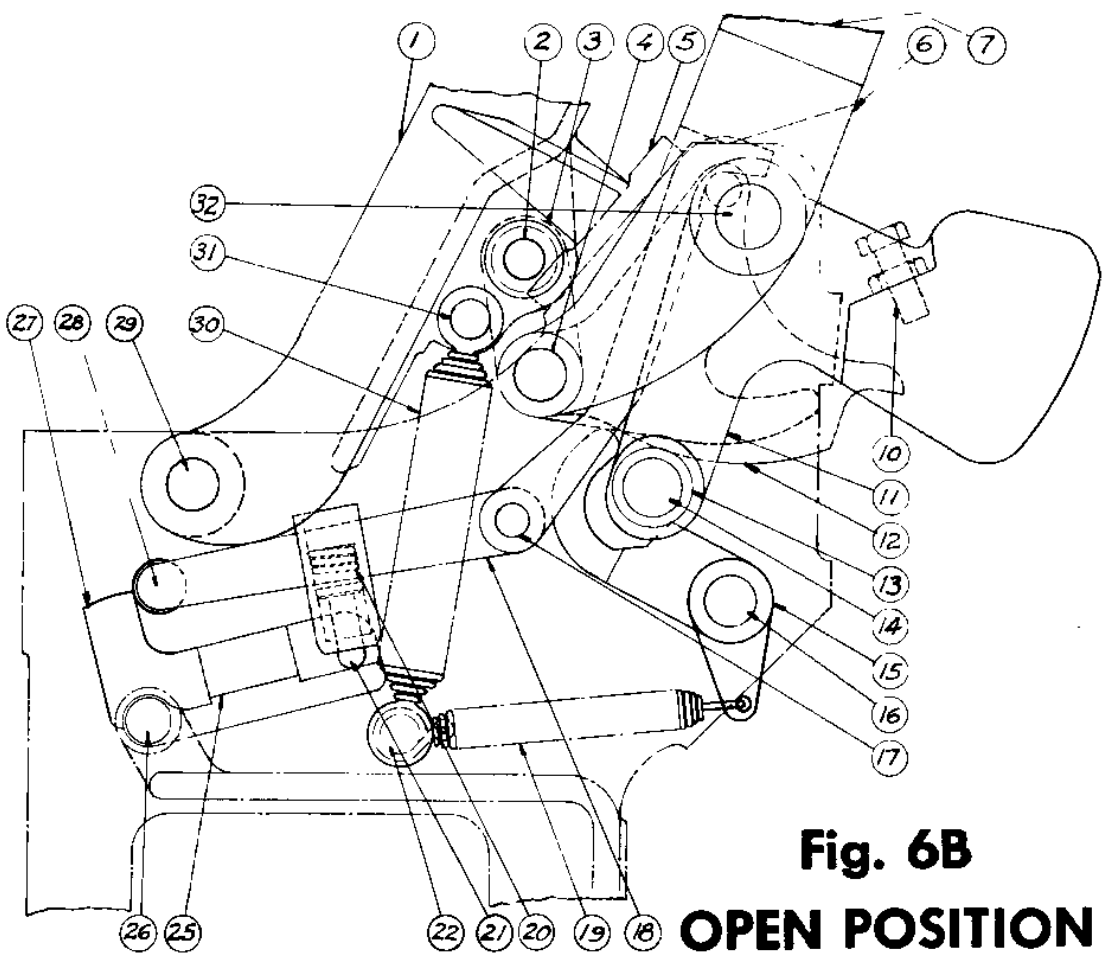

Fig. 6B
OPEN POSITION

1. Contact Arm
2. Pin
3. Operating Link
4. Pin
5. Bumper Pad
6. Operating Bracket
7. Tie Bar
8. Insulating Spacer
9. Gear Sector
10. Adjusting Screw
11. Closing Lever
12. Operating Latch Assembly
13. Roller
14. Pin
15. Closing Latch
16. Pin
17. Pin
18. Trip Latch
19. Extension Spring
20. Spring
21. Pin
22. Pin
23. Stop
24. Trip Pin
25. Trip Bar
26. Roller and Pin Assembly
27. Trip Finger
28. Roller and Pin Assembly
29. Pin
30. Extension Spring
31. Pin
32. Pin

Fig. 6
Operating Mechanism

1. Panel
2. Stationary Arcing Cont. Assembly
3. ¼"—20 x 2¼" Lg. Hex. Hd. Cap Scr.
4. #10—24 x 1" Lg. Fil. Hd. Mach. Scr.
5. Upper Stationary Cont. Assembly
6. Arc Barrier
7. Set Screw
8. Connector Assembly
9. Tertiary Contact (stationary)
10. Tertiary Contact (movable)
11. Main Contact Block (movable)
12. Guide Pin
13. ¼"—28 Hex. Elastic Stop Nut
14. Movable Arcing Contact
15. Pin
16. Cotter Pin
17. Spring
18. Shock Washer
19. ¼"—20 Jam Nut
20. Guide Pin
21. Locking Strip
22. Pin
23. ⅜"—16 x ½" Lg. Hex. Half Hd. Cap Scr.
24. ¼"—20 x ⅝" Lg. Hex. Hd. Cap Scr.
25. Square Lockwasher
26. Special Nut
27. Insulating Spacer
28. Spring
29. ¼"—20 Jam Nut
30. Cotter Pin
31. Pin
32. Spring
33. Flexible Connector Assembly
34. ¼"—20 x ⅝" Lg. Hex. Soc. Hd. Cap Scr.
35. Lower Stationary Cont. Assembly
36. ¼"—20 x ½" Lg. Hex. Hd. Cap Scr.
37. Contact Arm Assembly
38. Set Screw
39. Pin
40. Locking Strip
41. Upper Stationary Cont. Assembly
42. ¼"—20 x ¾" Lg. Hex. Hd. Cap Scr.

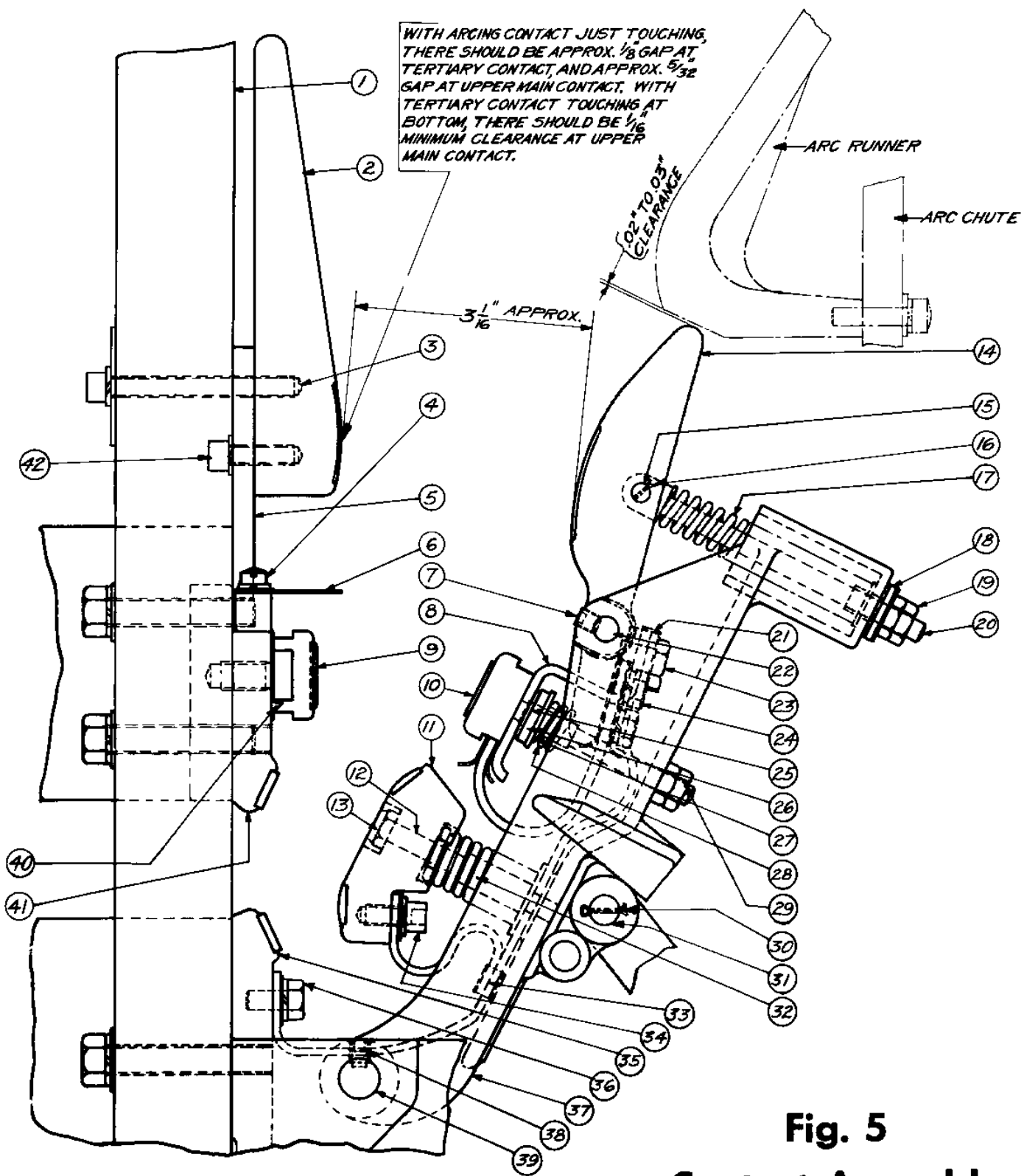

Fig. 5
Contact Assembly

1. Barriers
2. Rectifier Aging Resistor
3. Lifting Bracket
4. Window for Position Indicator
5. Tie Bar
6. Rectifier Connecting Bars
7. Rectifier for A.C. Control Voltage
8. Rating Label
9. Auxiliary Switch Linkage
10. Trip Bar Assembly
11. Auxiliary Switch
12. Adjusting Screw (R.H. Trip Bar)
13. Solenoid
14. Pole Plug
15. Handle (Emergency)
16. Brace
17. Shunt Trip
18. Manual Trip Push Button
19. Fuse Block
20. Fuses
21. "Y" Relay
22. Knife Switch
23. "X" Relay
24. Auxiliary Equip. Mounting Plate
25. Interlock Latch

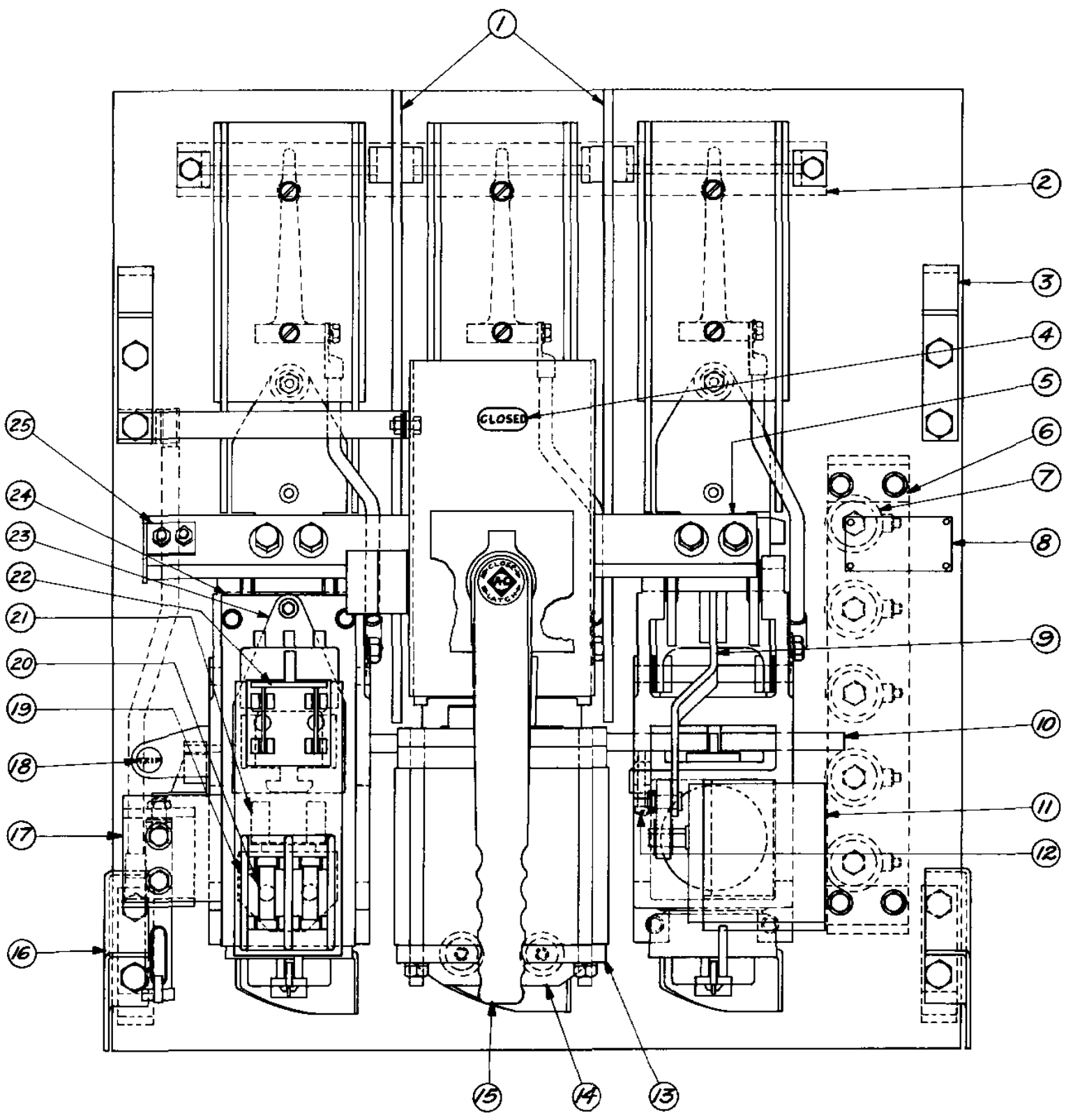

Fig. 4
Electrically Operated
(Front View)

1. Interlock Latch
2. Indicator Bracket
3. "a-a" or "b-b" Switch
4. Cam Assembly
5. Handle
6. Set Screw
7. Closing Lever
8. Auxiliary Equip. Mounting Plate
9. Set Screw
10. Insulating Spacer
11. Pin
12. Insulating Link
13. Solenoid
14. Pole Plug
15. Insulating Spacer
16. Rectifier Connecting Bars
17. Rectifier for A.C. Control Voltage
18. Secondary Contact Fingers
19. Rectifier Aging Resistor
20. Cap Screw

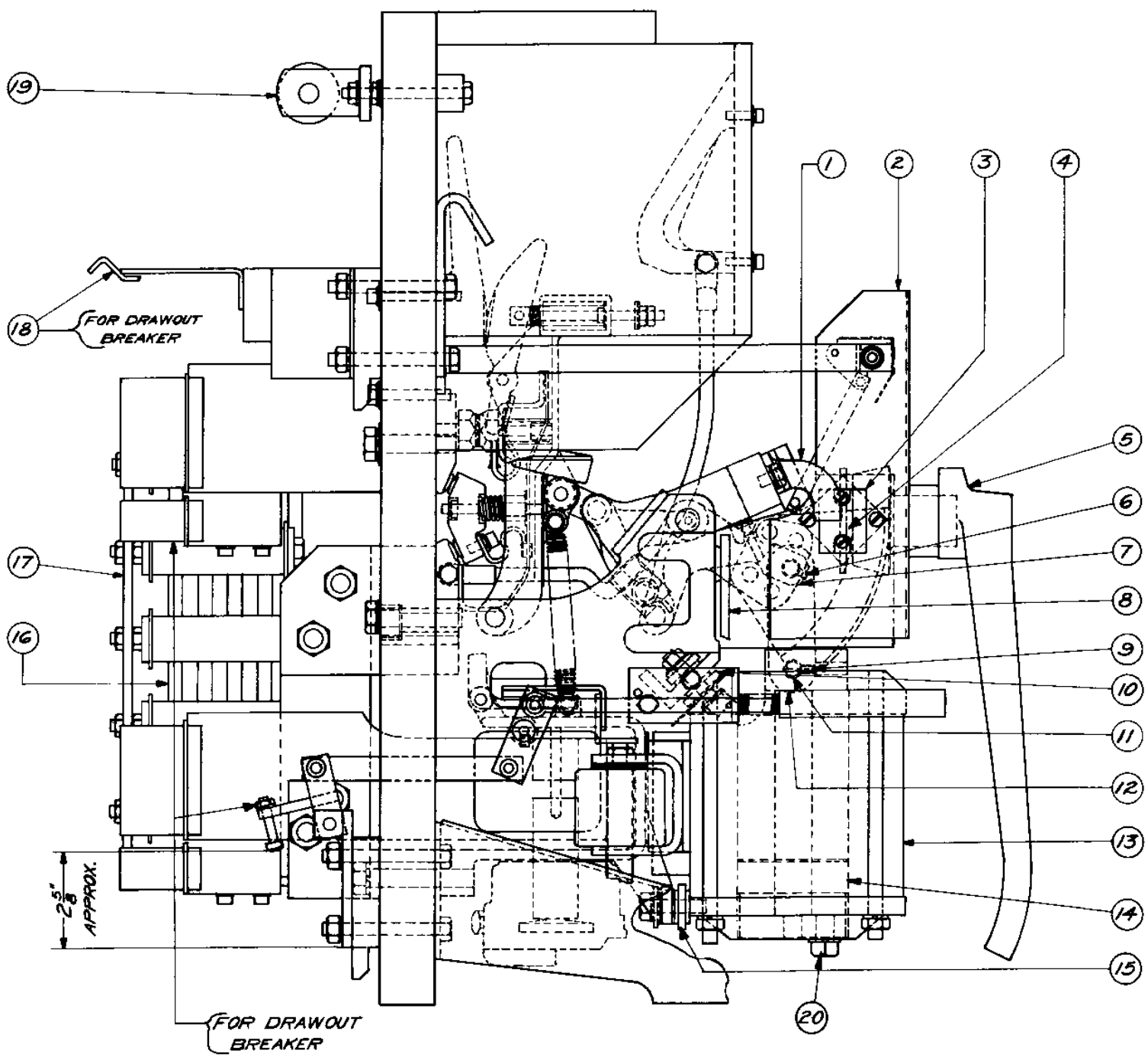

Fig. 3
Electrically Operated
(Side View)

1. Panel
2. Arc Barrier
3. Arc Chute
4. Movable Contact Assembly
5. ¼"—20 x ⅞" Lg. Fil. Hd. Cap Scr.
6. Arc Runner
7. Grounding Strip
8. Flexible Cable
9. Pin
10. Tie Bar
11. Position Indicator
12. Bevel Gear
13. Bearing Bracket
14. Pinion
15. Pin Assembly
16. Adjusting Screw
17. Operating Lever
18. Pin
19. Spring
20. Handle
21. Manual Trip Assembly
22. Auxiliary Switch Assembly
23. Shunt Trip Assembly
24. Bracket
25. Interlock Trip Assembly Adjusting Screw
26. Contact Fingers
27. ½"—13 x 2½" Lg. Hex. Hd. Cap Scr.
28. Overload Coil and Connector Assembly.
29. Dowel
30. Pin
31. ½"—13 x 1¾" Lg. Hex. Hd. Cap Scr.
32. Lower Stationary Cont. Assembly
33. Stationary Contact Assembly
34. Secondary Contact Fingers
35. Lifting Bracket

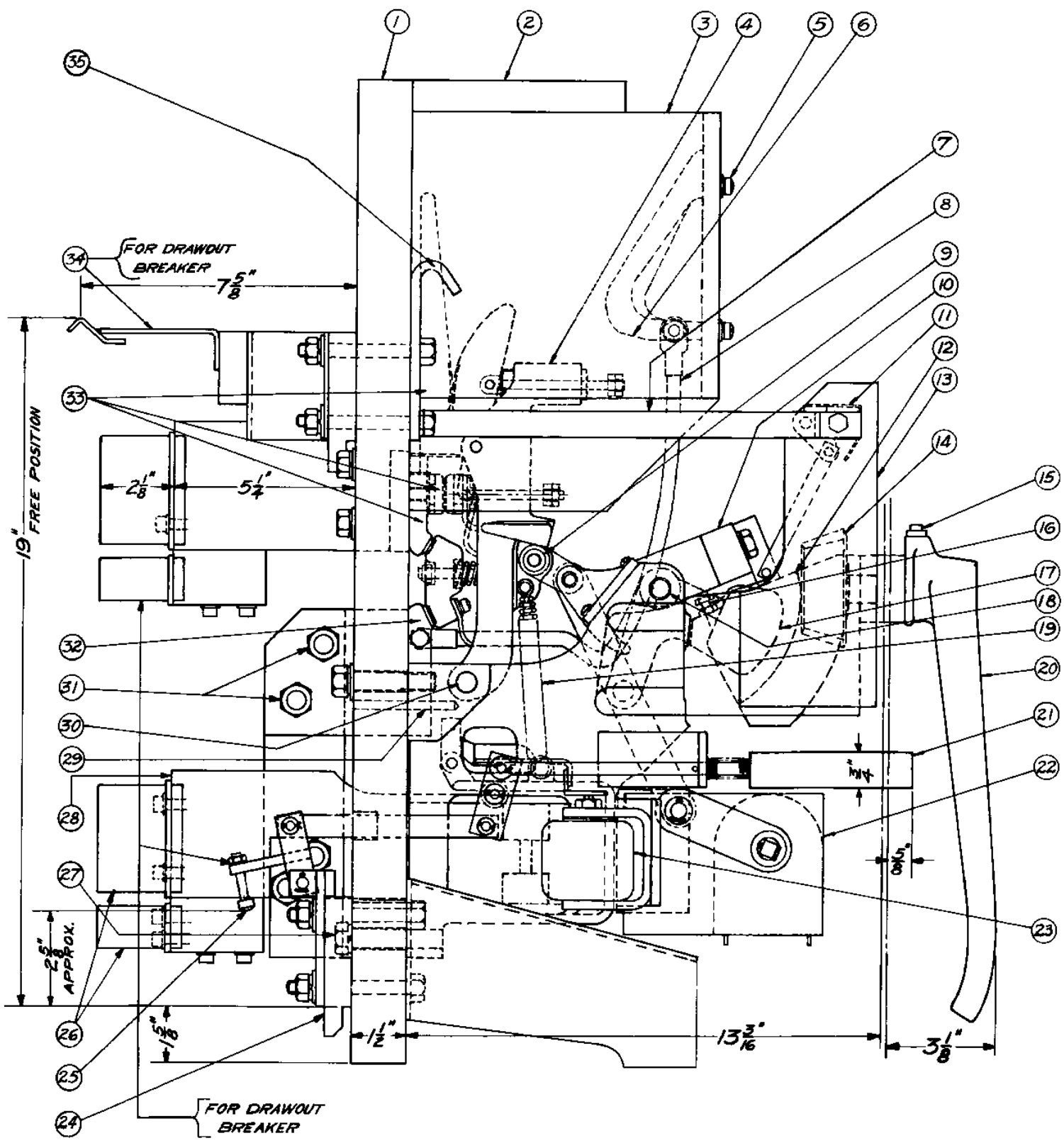

Fig. 2 Manually Operated (Side View)

1. Barriers
2. Lifting Bracket
3. Window for Position Indicator
4. Tie Bar
5. Rating Label
6. Auxiliary Switch Linkage
7. Trip Bar Assembly
8. Auxiliary Switch
9. Adjusting Screw (R.H. Trip Bar)
10. Closing Handle
11. Brace
12. Shunt Trip
13. Manual Trip Push Button

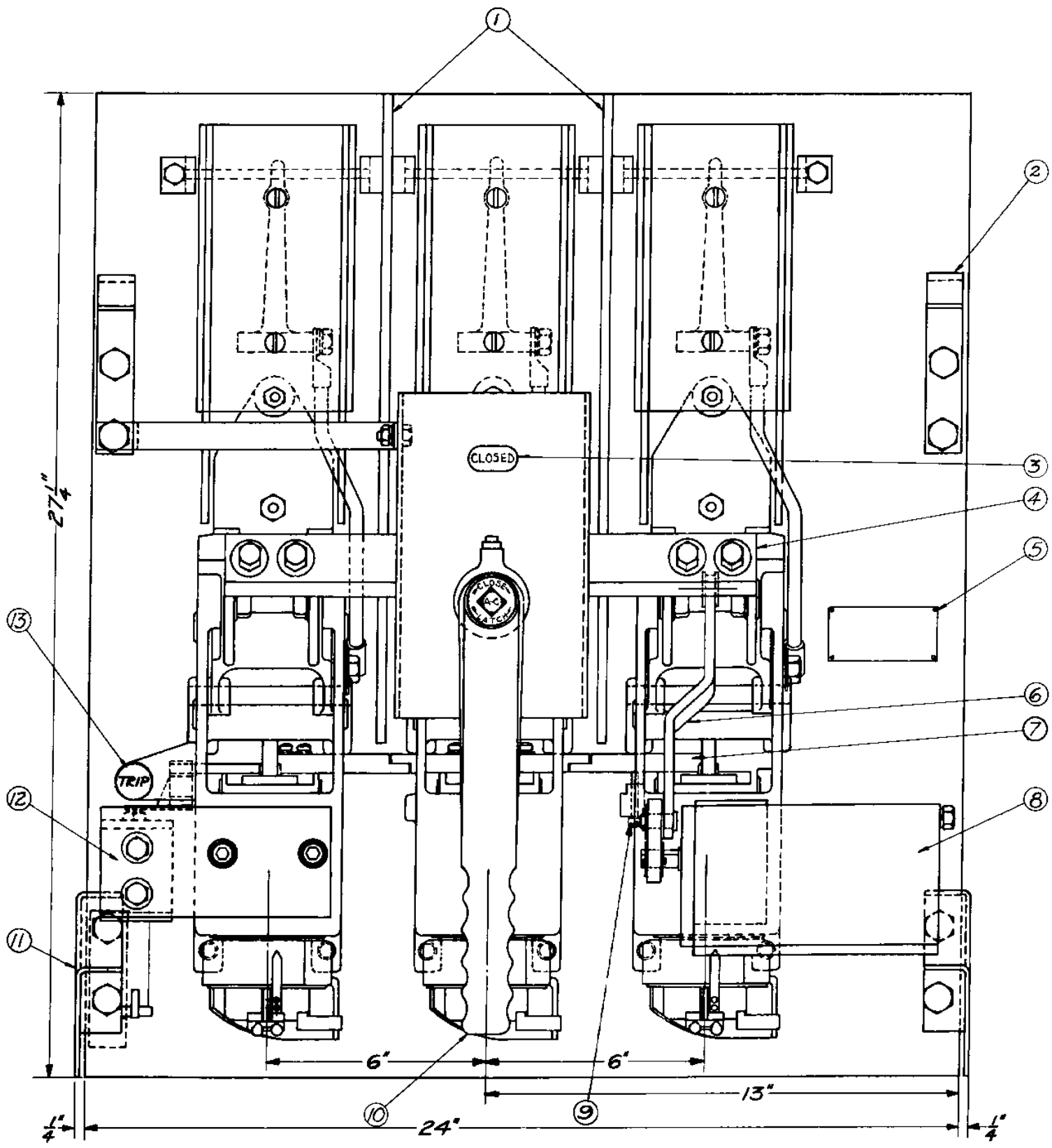

Fig. 1
Manually Operated
(Front View)

G-50-A

LIST OF ILLUSTRATIONS

Fig. 1—Manually Operated Breaker *(Front View)*

Fig. 2—Manually Operated Breaker *(Side View)*

Fig. 3—Electrically Operated *(Side View)*

Fig. 4—Electrically Operated *(Front View)*

Fig. 5—Contact Assembly

Fig. 6—Operating Mechanism

Fig. 7—Series Trip Armature and Suction Cup Assembly

Fig. 8—Undervoltage Trip Attachment

Fig. 9—Shunt, Manual and Interlock Tripping Devices

Fig. 10—Auxiliary Switch Mounting

Fig. 11—Bell Alarm and Electrical Lockout

Fig. 12—Control Station

Fig. 13—Inverse Time Series Overcurrent Trip Calibration Curves

Fig. 14—Connection Diagram for Manually Operated Breakers

Fig. 15—Control Schemes

Fig. 16—Schematic Diagram—Undervoltage Attachment

SALES OFFICES

ALABAMA — Telephone
Birmingham 3, 1st Ave. & 20th St. ... 3-8211

ARIZONA
Phoenix, 45 W. Jefferson St. ... 3-5446

CALIFORNIA
Los Angeles 13, 458 South Spring St. ... Madison 6-2231
San Diego 1, 747 Ninth Ave. ... Franklin 4684
San Francisco 7, 650 Harrison St. ... Douglas 2-8384

COLORADO
Denver 1, 1920 Market St. ... Cherry 6556

CONNECTICUT
New Haven 10, 157 Church St. ... 7-1176

DISTRICT OF COLUMBIA
Washington 5, 15th & H Sts., N.W. ... Executive 2800

FLORIDA
Jacksonville 1, 422 W. Duval St. ... Jacksonville 4-3117
Miami 32, 327 N.E. First Ave. ... Miami 2-7744
Tampa 2, 405 S. Morgan St. ... 2-8371

GEORGIA
Atlanta 3, 58 Broad N. W. ... Walnut 7116

ILLINOIS
Chicago 3, 135 So. LaSalle St. ... Franklin 2-6480
Rockford, 303 North Main St. ... Main 5-5721

INDIANA
Evansville 9, 125 Locust St. ... 2-9005
Indianapolis 4, 11 S. Meridan St. ... Riley 6415

IOWA
Davenport, 326 W. Third St. ... 3-9793

KENTUCKY
Louisville 2, 5th and Jefferson Sts. ... Clay 7656

LOUISIANA
New Orleans 12, 210 Baronne St. ... Raymond 8623
Shreveport 23, 624 Travis St. ... 2-6404

MARYLAND
Baltimore 2, 10 Light St. ... Plaza 1463

MASSACHUSETTS
Boston 16, 31 St. James Ave. ... Hubbard 2-3700

MICHIGAN
Detroit 2, W. Grand Blvd. & 2nd Blvd. ... Trinity 1-2300
Grand Rapids 2, 5-7 Lyon St., N. W. ... 9-3015
Jackson, 297 W. Michigan Ave. ... 2-2419

MINNESOTA
Duluth 2, 10 E. Superior St. ... Melrose 8280
Minneapolis 2, 821 Marquette Ave. ... Main 7559

MISSOURI
Kansas City 6, 6 East 11th St. ... Victor 0132
St. Louis 3, 1205 Olive St. ... Central 4313

NEBRASKA
Omaha 8, 9th & Farnam Sts. ... Atlantic 1668

NEW JERSEY
Newark 2, 1060 Broad St. ... Market 3-7170

NEW YORK — Telephone
Buffalo 2, Main & Court Sts. ... Washington 1741
New York 7, 50 Church St. ... Beekman 3-9100
Rochester 4, 89 East Ave. ... Baker 7510
Syracuse 2, 472 S. Salina St. ... Syracuse 3-0147

NORTH CAROLINA
Charlotte 2, 212 S. Tryon St. ... 2-3188

OHIO
Cincinnati 2, 617 Vine St. ... Main 3347
Cleveland 14, East 9th & Superior Sts. ... Main 5183
Toledo 4, Summit at Madison ... Adams 5269
Youngstown 3, 25 E. Boardman St. ... Youngstown 3-5175

OKLAHOMA
Oklahoma City, 901 W. Grand Ave. ... 79-2568
Tulsa 3, 320 E. Archer St. ... 4-9163

OREGON
Portland 4, 920 S. W. 6th Ave. ... Broadway 5515

PENNSYLVANIA
Philadelphia 3, 1617 Pa. Blvd. ... Ritenhouse 6-9606
Pittsburgh 19, 421 Seventh Ave. ... Atlantic 1-4154
Wilkes-Barre, Market & Franklin Sts. ... (Bell) W.B. 3-2413
York, 42 East King St. ... York 6642

RHODE ISLAND
Providence 3, 1607 Indus. Tr. Bldg. ... Plantations 8210

TENNESSEE
Chattanooga 2, 737 Market St. ... 7-4495
Knoxville 2, 531 S. Gay St. ... 2-2165
Memphis 3, 46 N. Third St. ... 5-0583

TEXAS
Amarillo, Amarillo Bldg. ... 31766
Beaumont, 490 Bowie St. ... 2413
Dallas 2, 1800 N. Market St. ... Central 7144
El Paso, Corner Oregon & Mills Sts. ... 3-7439
Fort Worth 1, 408 West 7th St. ... 2-5083
Houston 3, 1719 McKinney Ave. ... Preston 7188
San Antonio 5, Commerce and Main Ave. ... G-7022

UTAH
Salt Lake City 1, 134 S. Main St. ... 3-1723

VIRGINIA
Richmond 19, 527 East Main St. ... 3-6646

WASHINGTON
Seattle 1, 1318 4th Ave. ... Main 3797
Spokane 8, West 428 Riverside ... Madison 0185

WEST VIRGINIA
Charleston 1, Cor. Summers & Lee ... Capital 39-505

WISCONSIN
Milwaukee 2, 715 N. Van Buren St. ... Marquette 8-4729

Dealers in all principal cities throughout the United States

Offices and distributors located throughout the world

ALLIS-CHALMERS

MILWAUKEE 1, WISCONSIN