WavePro™ Power Circuit Breaker Accessories

Remote Charge-Indication Switch for 3200–5000 A

Introduction

The remote charge-indication switches, catalog number WPRCILFKIT1 for electrically operated breakers and WPRCILFKIT2 for manually operated breakers, allow remote monitoring of the state of the closing springs. When the springs are charged, terminals 8 and 17 at the C secondary disconnect are shorted and are open when the springs are discharged.

The switch is illustrated in Figure 1. The kits include a secondary disconnect block, as illustrated in Figure 2, and all mounting hardware. The parts included in the kit for electrically operated breakers are listed in Table 1. The parts included in the kit for manually operated breakers are listed in Table 2. Numbers in brackets in the text and figures refer to the item numbers in these tables.

Note that if you are replacing an existing remote charge-indication switch, only Item 1 in Table 1, which can be ordered separately, is required.

Item	Part No.	Description	Qty.
1	10080300G1	Switch & wires	1
2	10054865G2	Secondary disconnect	1
3	N722P16012B6	Screw, #10-32 x 3/4"	2
4	10054865P3	Spacer	2
5	794A736P1	Spring washer	1
6	793A445P25	Terminal	2
7	192A9792P1	Insulator	1

Table 1. Parts included in the remote charge-indication switch kit for electrically operated breakers, catalog number WPRCILFKIT1.

Item	Part No.	Description	Qty.
2	10054865G2	Secondary disconnect	1
3	N722P16012B6	Screw, #10-32 x 3/4"	2
4	10054865P3	Spacer	2
5	794A736P1	Spring washer	1
6	793A445P25	Terminal	2
8	139C4458G4	Switch assembly	1
9	192A8404P1	Spacer	1
10	N37P21016B6	Screw, 1/4-20 x 1"	1
11	N37P21008B6	Screw, 1/4-20 x 1/2"	2
12	N405P11B6	Lockwasher, 1/4"	3

Table 2. Parts included in the remote charge-indication switch kit for manually operated breakers, catalog number WPRCILFKIT2.

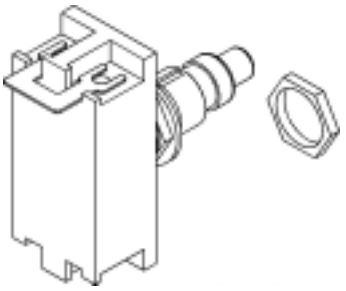

Figure 1. Remote charge-indication switch.

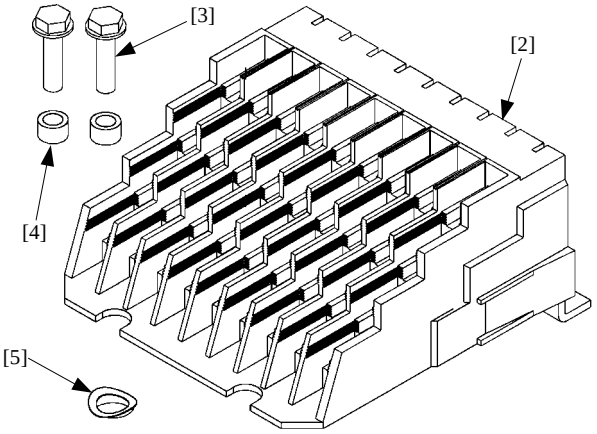

Figure 2. Secondary disconnect block.

Installation

WARNING: Before installing any accessories, turn the breaker OFF, disconnect it from all voltage sources, and discharge the closing springs.

AVERTISSEMENT: Avant d'installer tout accessoire, mettre le disjoncteur en position OFF, le déconnecter de toute tension d'alimentation, et décharger les ressorts d'armement.

Use the following procedures, as appropriate, to install a new or replacement remote charge-indication switch.

WavePro™ Low Voltage Power Circuit Breakers

Remove the Escutcheon

The first step in the installation procedure is to remove the breaker escutcheon, as follows:

1. Pull the ends of the two trim plate mounting rods out of the holes at the rear of both sides of the escutcheon, then remove the trim plate.
2. Remove the six screws securing the escutcheon to the breaker. Pull the manual charging handle out part way, then slide off the escutcheon.

Removing an Existing Remote Charge-Indication Switch

Use the following procedure to remove an existing remote charge-indication switch for replacement, as illustrated in Figure 3.

1. Remove the two screws and lock washers securing the cover over the remote-charge indication switch and the motor cut-off switch and lift off the cover.
2. Disconnect the two wires on the screw terminals on the remote-charge indication switch.
3. Remove the nut securing the switch to the mounting bracket and remove the switch.

Installing a Replacement or New (Electrically Operated) Remote Charge-Indication Switch

Use the following procedure to install a replacement remote charge-indication switch (either manually or electrically operated breaker), as illustrated in Figure 3. This procedure also applies to new installations in electrically operated breakers (kit WPRCILFKIT1).

1. Insert the button end of the switch [1] into the insulating barrier [7], then into the hole in the mounting bracket, and secure with the nut on the threaded shaft. Note that in manually operated breakers the motor cutoff switch and insulating barrier will not be present.

   Be sure that the locking ring tab fits into the corresponding hole in the mounting plate to prevent switch rotation.
2. If this is a replacement switch, attach the two wires removed from the old switch and leading to secondary disconnect C to the screw terminals on the switch.

   If this is a new installation, connect control wires to the screw terminals on the switch, then route the wires to secondary disconnect C, as shown in Figure 4, and connect to terminals 8 and 17, as illustrated in Figure 5. If there is no secondary disconnect C block installed, install the unit supplied with the kit, as described below.
3. Adjust the switch as illustrated in Figure 6:
   a. Charge the breaker closing springs with the manual charging handle.
   b. The main stem of the switch should be located between 0.005 and 0.030 inch from the threaded barrel.
   c. If necessary, adjust the switch depression by screwing the switch button in or out of the threaded housing.
   d. Close and trip the breaker.

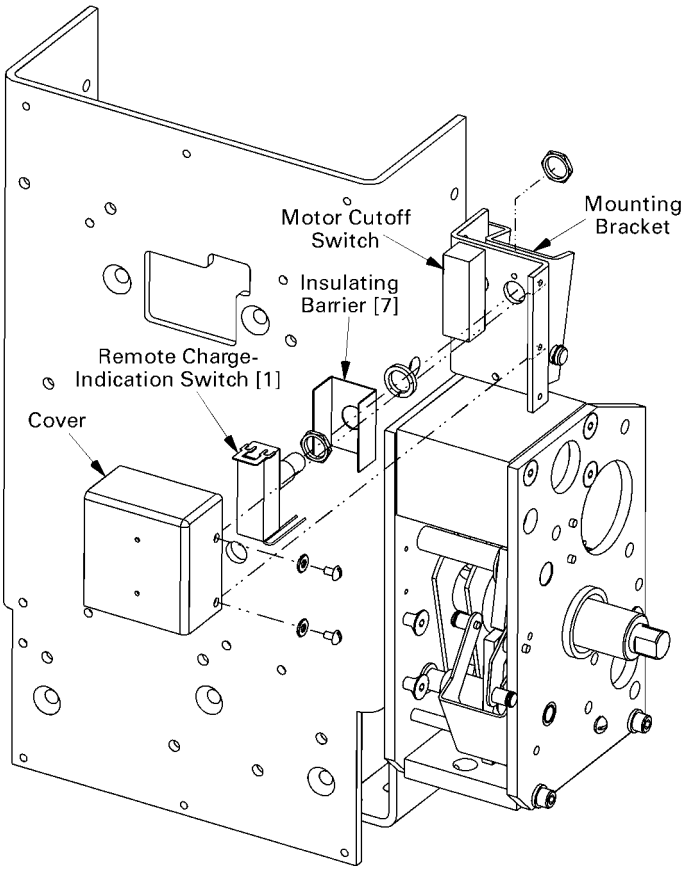

Figure 3. Remote charge-indication switch removal and installation.

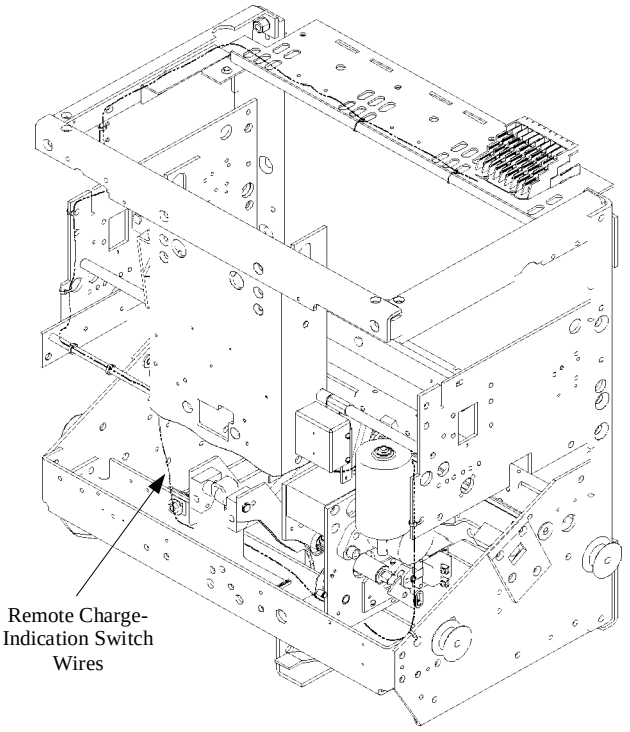

Figure 4. Recommended route for wiring to the secondary disconnect.

4. Place the cover over the switches and secure to the mounting bracket with the two screws and lock washers.

Installing a New Remote Charge-Indication Switch (Manually Operated Breaker)

Use this procedure for installing a remote charge-indication switch in a manually operated breaker (kit WPRCILFKIT2), as illustrated in Figure 7.

1. Line up the holes in the mounting bracket of the switch assembly [8] with the three holes in the side of the breaker frame above the charging handle assembly.
2. Secure with 1/4-20 x 1/2" screws [11] and lock washers [12] into the upper two mounting holes and a 1/4-20 x 1" screw [10], lock washer [12], and spacer [9] in the lowest hole. Tighten the screws to 60–70 in-lb.
3. Connect control wires to the screw terminals on the switch, then route the wires to secondary disconnect C, as shown in Figure 4, and connect to terminals 8 and 17, as illustrated in Figure 5. If there is no secondary disconnect C block installed, install the unit supplied with the kit, as described below.
4. Adjust the switch as illustrated in Figure 6:
   a. Remove the two screws and lock washers in the side of the cover on the switch assembly [8] and lift off the cover.
   b. Charge the breaker closing springs with the manual charging handle.
   c. The main stem of the switch should be located between 0.005 and 0.030 inch from the threaded barrel.
   d. If necessary, adjust the switch depression by screwing the switch button in or out of the threaded housing.
   e. Close and trip the breaker.
   f. Replace the cover on the switch assembly and secure with the two screws and lock washers.

Install the Secondary Disconnect C Block

If there is no secondary disconnect C block installed on the breaker, use the following procedure to install the unit supplied with this kit, as illustrated in Figure 8.

1. Place the spring washer [5] on the molded pin on the underside of the disconnect body [2] and hold it in place.
2. Slide the mounting feet on the disconnect into the two slots in the secondary disconnect mounting plate.
3. Place the two screws [3] and spacers [4] into the slots on the front of the disconnect and into the tapped holes in the mounting plate. Tighten to 40 in-lb.
4. Connect the two wires from the remote charge-indication switch to terminals 8 and 17, as illustrated in Figure 5.

9	**8**	7	6	5	4	3	2	1
18	**17**	16	15	14	13	12	11	10
27	26	25	24	23	22	21	20	19
36	35	34	33	32	31	30	29	28

Figure 5. Secondary disconnect terminal numbering.

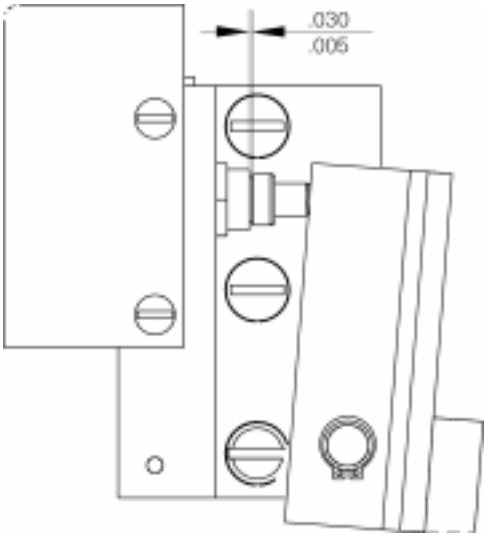

Figure 6. Adjusting the remote charge-indication switch.

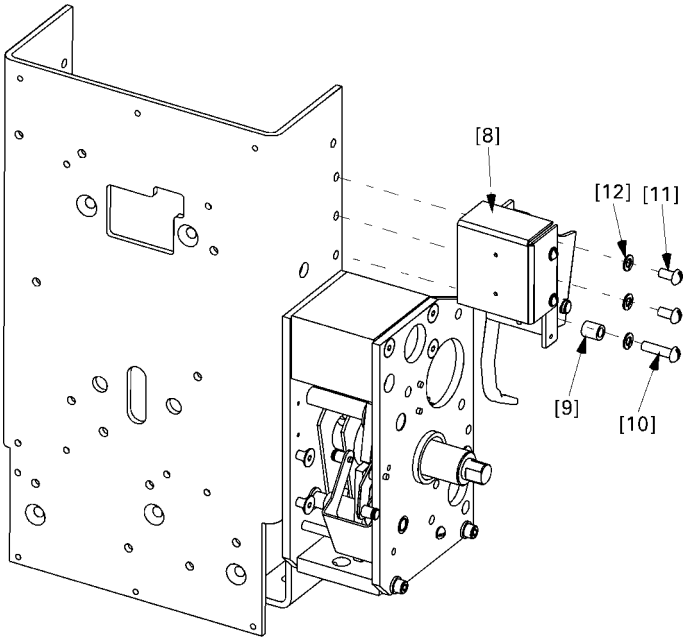

Figure 7. Installing a remote charge-indication switch in a manually operated breaker.

Replace the Escutcheon

Replace the breaker escutcheon, as follows:

1. Pull the manual charging handle out part way, then slide the handle through the slot in the replacement escutcheon and move the escutcheon into place. Insert the six mounting screws and tighten to 14–20 in-lb.
2. Replace the trim ring around the escutcheon, with the narrow side at the bottom. Insert the trim plate mounting rods into the rear of the escutcheon.

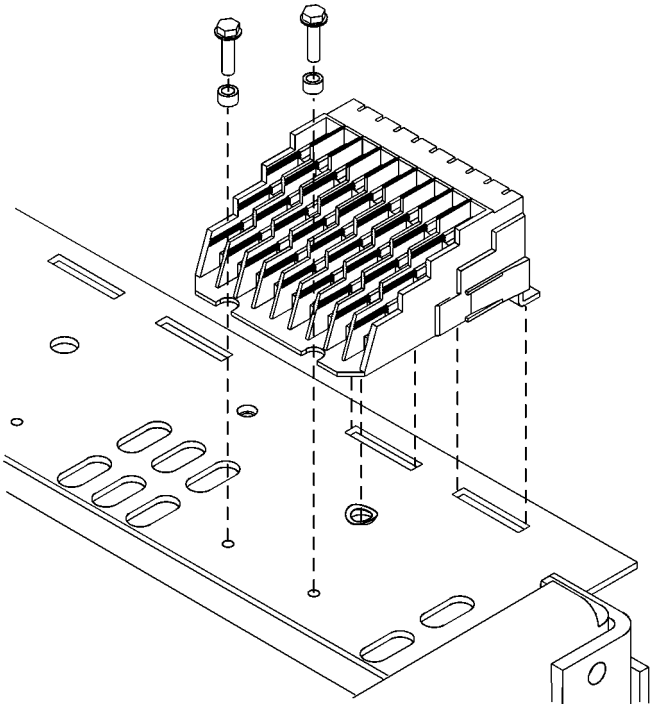

Figure 8. Installing a secondary disconnect C block.

These instructions do not cover all details or variations in equipment nor do they provide for every possible contingency that may be met in connection with installation, operation, or maintenance. Should further information be desired or should particular problems arise that are not covered sufficiently for the purchaser's purposes, the matter should be referred to the GE Company.

GE Industrial Systems

General Electric Company
510 East Agency Road, West Burlington, IA 52655

DEH40440 R02 0302 © 2002 General Electric Company