WavePro™ Power Circuit Breaker Accessories

Bell Alarm for 3200–5000 Ampere Breakers

Introduction

The Bell Alarm provides two switches to remotely indicate that the circuit breaker has tripped because of a protection trip. It may be installed in either of two configurations. As a Bell Alarm with Automatic Reset, it resets automatically when the breaker is reclosed and can also be reset manually. As a Bell Alarm with Lockout, it can only be reset manually by pressing the target on the breaker escutcheon.

The catalog number for the replacement Bell Alarm for 3200–5000 ampere frame WavePro breakers is WPBALF. The kit includes the Bell Alarm module, a universal mounting plate, and all necessary hardware for installation.

Table 1 contains the contact ratings for the Bell Alarm.

Voltage	Contact Rating, A
125 Vdc	0.50
250 Vdc	0.25
240 Vac	6.0

Table 1. Bell Alarm contact ratings.

Operation

The Bell Alarm provides normally open and normally closed outputs available at the secondary disconnects, as illustrated in Figure 1. The Bell Alarm is activated and the outputs change state whenever the breaker is tripped by an overcurrent or ground fault via the Trip Unit. A trip caused by the manual CLOSE button or by the Shunt Trip or Undervoltage Release accessories does not activate the Bell Alarm.

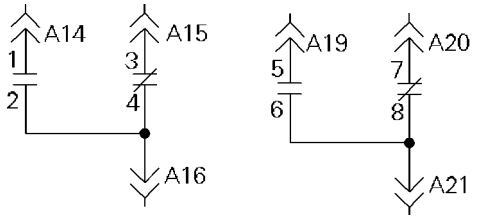

Figure 1. Bell Alarm connections on the secondary disconnect. The contacts are shown in the reset state.

Bell Alarm with Reset Operation

The Bell Alarm can be reset, returning the contacts to their normal configuration, by reclosing the breaker or by pressing the Bell Alarm target on the breaker escutcheon.

Bell Alarm with Lockout Operation

In addition to providing outputs indicating the breaker's state, the Bell Alarm with Lockout prevents closing of the breaker after a protection trip until the Bell Alarm with Lockout is reset. It can be reset, returning the contacts to their normal configuration and allowing the breaker to be closed, only by pressing the Bell Alarm with Lockout target on the breaker escutcheon.

Note that the circuit breaker must be racked in to the connected position, as indicated by the legend CONN on the draw-out position indicator flag, for proper operation of the lockout function of a Bell Alarm with Lockout.

Installation

WARNING: Before installing any accessories, turn the breaker OFF, disconnect it from all voltage sources, and discharge the closing springs.

AVERTISSEMENT: Tourner le disjoncteur à la position OFF, le débrancher de toute source de tension et décharger les ressorts de fermeture avant l'installation de tout accessoire.

The following installation procedure is described in several sections. First, follow the procedure for preparing the breaker for installation of the Bell Alarm, choose the appropriate procedure for installing the Bell Alarm in the desired configuration, then return the breaker to operation.

WavePro™ Low Voltage Power Circuit Breakers

Preparing for Installation

1. Open the breaker and remove it from the cubicle or substructure. (See DEH-135 or DEH-137 for detailed instructions.)
2. Insert the Racking Handle (catalog number 568B731G1) and move the racking mechanism to the TEST position, as shown on the draw-out position indicator.
3. Remove the four screws securing the trim plate to the breaker, then remove the trim plate.
4. Remove the six screws securing the escutcheon to the breaker. Pull the manual charging handle up part way, then slide off the escutcheon.

Installing a Bell Alarm with Automatic Reset

5a. Screw the supplied standoff into the front plate of the breaker, as shown in Figure 2.

6a Place the Bell Alarm mounting plate over the standoff and secure with a washer and nut. Insert the long bolt, with two washers, through the pivot on the mounting plate and screw it into the tapped hole in the front plate of the breaker, as illustrated in Figure 2. Ensure that the engagement pin on the side of the mounting plate, also shown in the top view in Figure 3, fits into the slot in the breaker mechanism.

7a. Line up the Bell Alarm module on the mounting plate, as shown in Figure 2, so that the solenoid plunger and locating pin fit in the appropriate holes. The label on the end of the module appears as in Figure 4, with the legend LF RESET horizontal. Attach the module with the two screws provided.

8a. Run the wires from the Bell Alarm module to the secondary disconnect A block as illustrated in Figure 5. Attach the wires to the breaker frame with wire ties as indicated. Table 2 lists the wire colors and terminal numbers. Figure 6 shows the secondary disconnect terminal numbering scheme, as seen from the front of the breaker, with the Bell Alarm terminals in bold.

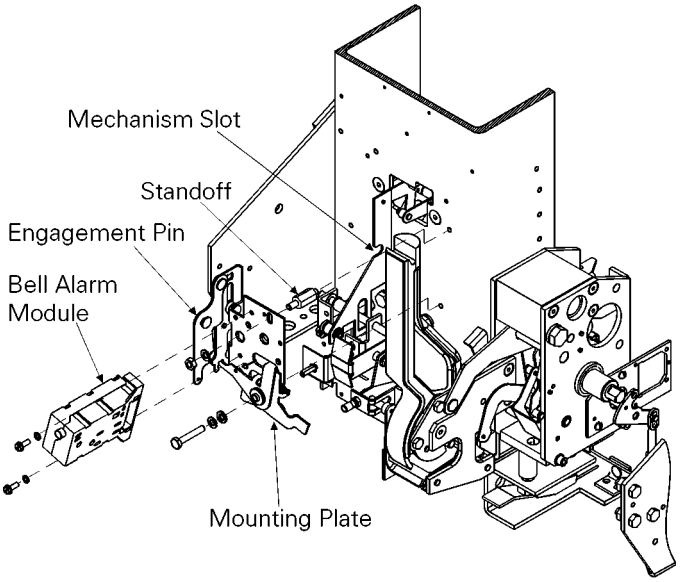

Figure 2. Installation of Bell Alarm with Automatic Reset.

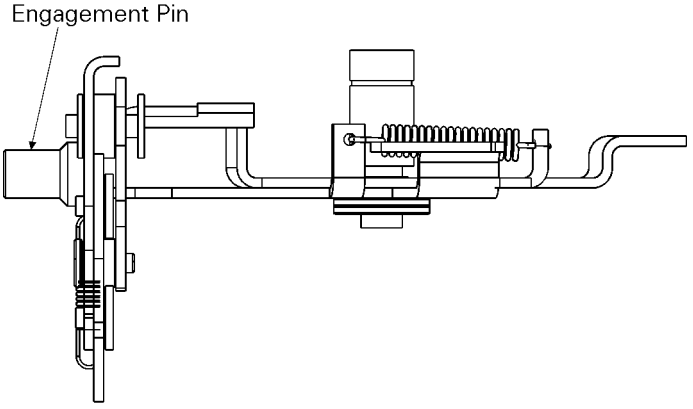

Figure 3. Top view of Bell Alarm nounting plate, showing the pin to engage the breaker mechanism.

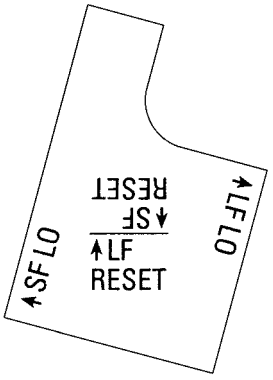

Figure 4. Orientation of the label on the Bell Alarm module for installation as a Bell Alarm with Automatic Reset.

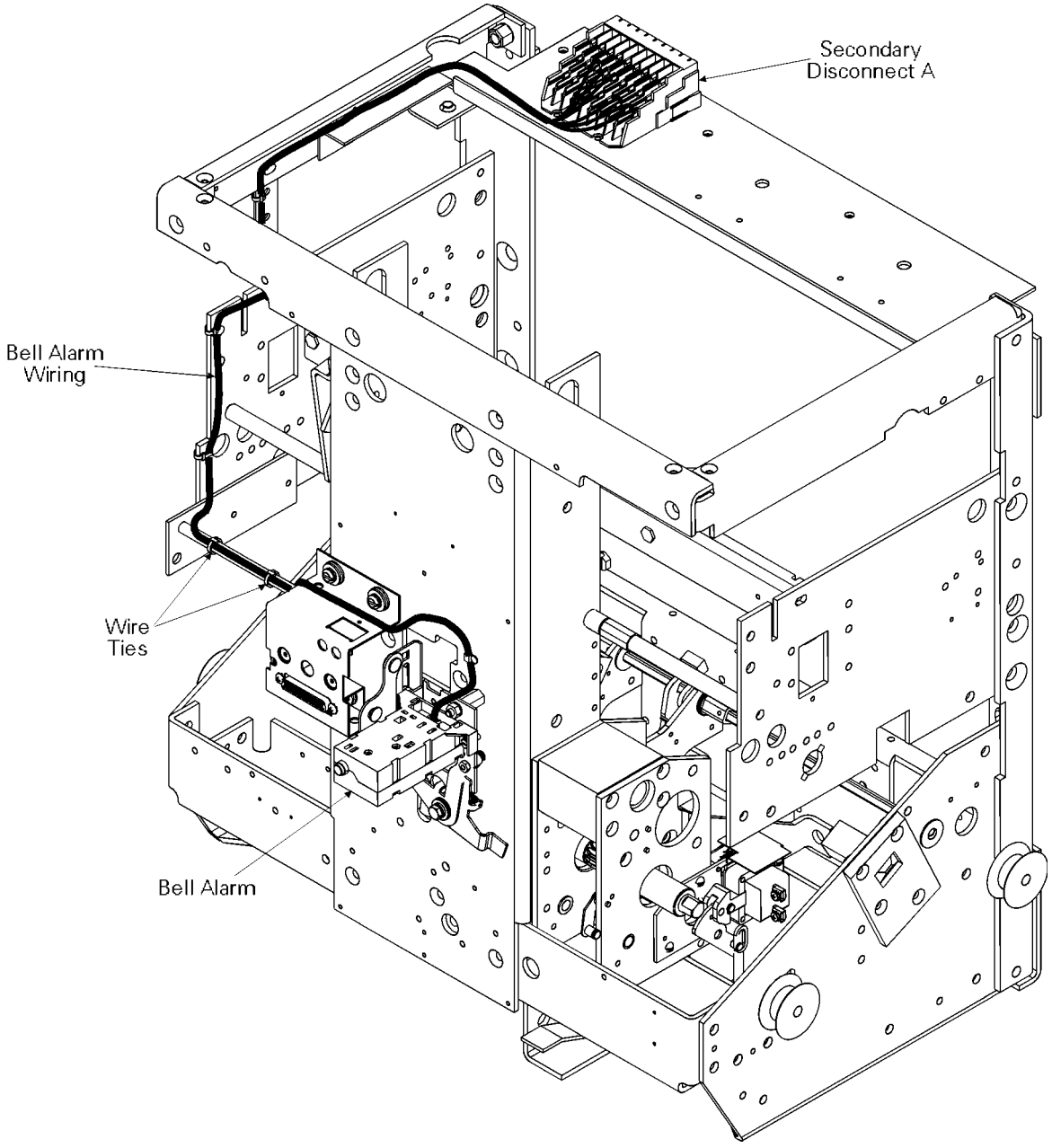

Figure 5. Path for routing wires from the Bell Alarm to the secondary disconnect.

Connection	Wire Color	Sec. Disc. Terminal #
Switch 1 NO	green	A14
Switch 1 NC	red	A15
Switch 1 COM	white	A16
Switch 2 NO	blue	A19
Switch 2 NC	yellow	A20
Switch 2 COM	black	A21

Table 2. Bell Alarm wires and corresponding secondary disconnect terminals.

9	8	7	6	5	4	3	2	1
18	17	**16**	**15**	**14**	13	12	11	10
27	26	25	24	23	22	**21**	**20**	**19**
36	35	34	33	32	31	30	29	28

Figure 6. Terminal numbering scheme of secondary disconnects, as seen from the front of the breaker.

Installing a Bell Alarm with Lockout

5b. Screw the supplied standoff into the front plate of the breaker, as shown in Figure 7.

6b. Place the Bell Alarm mounting plate over the standoff and secure with a washer and nut. Insert the long bolt. with two washers, through the pivot on the mounting plate and screw it into the tapped hole in the front plate of the breaker, as illustrated in Figure 7. Ensure that the engagement pin on the side of the mounting plate, also shown in the top view in Figure 3, fits into the slot in the breaker mechanism and that the lockout tab is underneath the handle tab.

7b. Line up the Bell Alarm module on the mounting plate, as shown in Figure 7, so that the solenoid plunger and locating pin fit in the appropriate holes. The label on the end of the module appears as in Figure 8, with the legend LF LO horizontal. Attach the module with the two screws provided.

8b. Run the wires from the Bell Alarm module to the secondary disconnect A block as illustrated in Figure 5. Attach the wires to the breaker frame with wire ties as indicated. Table 2 lists the wire colors and terminal numbers. Figure 6 shows the secondary disconnect terminal numbering scheme, as seen from the front of the breaker, with the Bell Alarm terminals in bold.

Returning the Breaker to Service

9. Check that the breaker racking mechanism is still in the TEST position. Pull the manual charging handle out part way, then slide the handle through the slot in the escutcheon and move the escutcheon into place. Insert the six mounting screws and tighten to 14–20 in-lb.

10. Replace the trim ring around the escutcheon, with the narrow side at the bottom. Insert the four mounting screws and tighten to 14–20 in-lb.

11. Insert the Racking Handle and return the racking mechanism to the DISC position, as shown by the draw-out position indicator.

12. Reinstall the breaker into its cubicle or substructure.

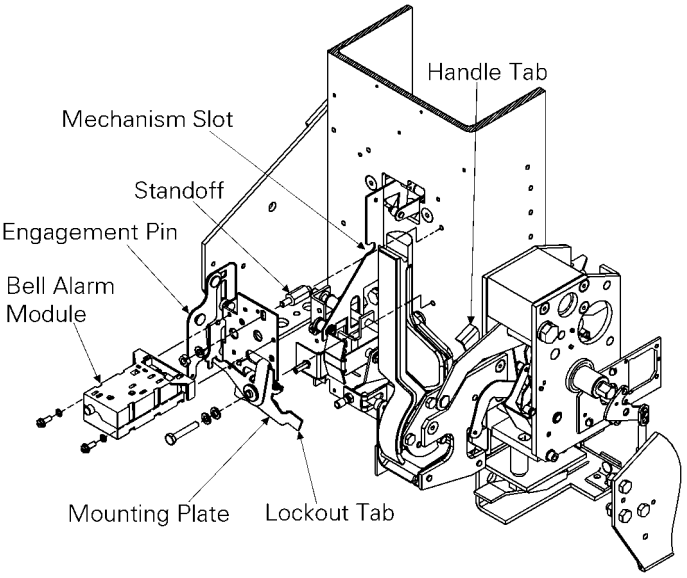

Figure 7. Installing a Bell Alarm with Lockout

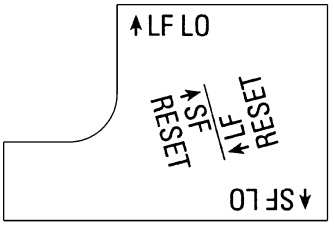

Figure 8. Orientation of the label on the Bell Alarm module for installation as a Bell Alarm with Lockout.

These instructions do not cover all details or variations in equipment nor do they provide for every possible contingency that may be met in connection with installation, operation, or maintenance. Should further information be desired or should particular problems arise that are not covered sufficiently for the purchaser's purposes, the matter should be referred to the GE Company.

GE Industrial Systems

General Electric Company
510 East Agency Road, West Burlington, IA 52655

 © 2002 General Electric Company