Instructions for Low-Voltage Power Circuit Breakers Types DS and DSL

READ AND UNDERSTAND THESE INSTRUCTIONS BEFORE ATTEMPTING ANY ASSEMBLY, OPERATION, OR MAINTENANCE OF THE SWITCH

Westinghouse Electric Corporation
Distribution and Control Business Unit
Electrical Components Division
Pittsburgh, PA 15220

I.B. 33-790-1G Effective September, 1989 Supersedes I.B. 33-790-1F dated October, 1983

Table of Contents

Description		Page
Introduction		1
General Description		2
Basic Breaker Assembly		2
Arc Chutes		2
Optional Components		2
Accessories		2
Special Circuit Breakers: DS-206S and DS-416S		2
Safety Features		4
Recommended Safety Practices		5
Section 1 - Receiving, Handling, and Storing		6
1.0	Receiving and Handling	6
1.1	Storing	6
1.2	Weights: Circuit Breakers and Fuse Trucks	6
Section 2 - First Removal of Breaker from Compartment		7
2.0	General	7
2.1	Setting the Rails in Front of the Compartment	7
2.2	Removing Shipping Brace	7
2.3	Lifting the Breaker	8
Section 3 - Preliminary Examination		9
3.0	General	10
3.1	Independent Manual and Power-Operated Breakers	11
3.1.1	Closing Facilities	11
3.1.2	Tripping Facilities	11
3.2	Levering Device	11
Section 4 - Basic Operating Instructions		12
4.0	General	12
4.1	Levering Device	12
4.2	Charge the Closing Springs	12
4.3	Close the Breaker	13
4.4	Open the Breaker	13
4.5	Place the Breaker in the TEST Position	14
4.6	Place the Breaker in the CONNECT Position	14
4.7	Remove the Breaker for Final Inspection	14
4.8	Final Inspection	14
4.9	Amptector Settings	14
4.10	Place the Breaker in Service	14
Section 5 - Description and Explanation of Operation		15
5.0	General	15
5.1	The Operating Mechanism and How It Works	15
5.1.1	Power Operated Mechanism	16
5.1.2	Explanation of Spring Charging Mechanism for Power Operated Breakers	16
5.1.2.1	Power Operation	17
5.1.3	Manual-Operated Mechanisms	23
5.1.4	Explanation of Spring Charging Mechanism for Manually Operated Breakers	23

Table of Contents (Cont'd.)

Description		Page
5.1.5	Circuit Breaker Closing Mechanism	25
5.1.6	Circuit Breaker Tripping or Opening Mechanism	26
5.1.6.1	Miscellaneous Details	27
5.1.7	Mechanical Interlocking, Description and Explanation of Operation	29
5.1.7.1	The REMOVE Position	30
5.1.7.2	The DISCONNECT Position	30
5.1.7.3	The TEST Position	30
5.1.7.4	The CONNECT Position	31
5.1.8	Detailed Explanation of Mechanical Interlock System	31
5.1.8.1	Spring Discharge Interlock	33
5.1.8.2	Connected Breaker Manual Close Interlock	35
5.1.8.3	Breaker Equipped for Electric Lockout	36
5.1.8.4	Closed Breaker Interlock	36
5.1.8.5	Padlocking Provision	36
Section 6 - Circuit Breaker Pole Units, Description and Operation		38
6.0	General	38
6.1	Moving Contact Sub-Assemblies	38
6.2	Stationary Contact Sub-Assemblies	40
Section 7 - Arc Chute		53
7.0	General	53
Section 8 - Circuit Breaker Automatic Tripping System		55
8.0	General	55
8.1	The Amptector II Trip Unit	56
8.2	The Amptector I Trip Unit	57
8.2.1	Ground Protection	61
8.3	Making Current Release (Discriminator)	61
8.4	Servicing of Amptector Trip Unit	62
8.5	Actuator	62
8.6	Sensors	63
8.7	Optional Accessories	63
8.7.1	Undervoltage Trip Attachment	64
8.7.2	Overcurrent Trip Switch	64
8.7.3	High Load Switch (available with Amptector I only)	65
8.7.4	Latch Check Switch	66
8.7.5	Auxiliary Switches	66
8.7.6	Amptector Trip Unit Test Kit (for Amptector I only)	67
8.7.6.1	General	67
8.7.6.2	Description	67
8.7.6.3	Operation	67
Section 9 - DSL Circuit Breakers and Fuse Trucks		69
9.0	General	69
9.1	DSL Current Limiters	69
9.2	Blown Limiter Indicator	69
9.3	Fuse Trucks	70
9.3.1	Installing Fuse Trucks	71
9.3.2	Replacing Fuses	71
9.3.3	Blown Fuse Indicator	71

Table of Contents (Cont'd.)

Description		Page
Section 10 - Fixed Breakers		73
Section 11 - Drawout Dummy Elements		73
Section 12 - Inspection and Maintenance		74
12.0	General	74
12.1.1	When to Inspect	75
12.1.2	What to Inspect.	75
12.1.2.1	DS-206, DS-206S, DS-416, DS-416S and DS-420.	77
12.1.2.2	DS-632 and DS-840	78
12.1.3	Replacement of Contents	78
12.1.3.1	DS-206	78
12.1.3.2	DS-416, DS-416S, DS-420, DS-632 and DS-840	78
12.1.4	Arc Chutes.	78
12.1.5	General Inspection.	78
12.2	Factory Adjustments	79
12.2.1	Trip Latch Overlap	80
12.2.2	Breaker Open Position Stop (DS632 only)	80
12.2.3	Moving Contact Adjustment	80
12.2.4	Levering Mechanism.	80
12.3	Lubrication	81
12.3.1	Frequency	81
12.3.2	Location and Lubricant	81
Section 13 - Renewal Parts		82
13.0	General	82
13.1	Identifying Parts for DS-416S and DS-206S	82
13.1.1	DS-416S Parts.	82
13.1.2	DS-206S Parts.	82

List of Tables

1.	Type DS Breaker Ratings	1
2.	DSL Breakers - Current Limiting Type Breakers and Combinations.	2
3.	Approximate Weights.	6
4.	Frame Size and Sensor Ratings	63
5.	Sensor and Limiter Ratings	69

List of Illustrations

Figure	Title	Page
1	The Type DS Low Voltage Power Circuit Breaker is Shipped Inside Its Own Compartment	7
2	Rails are Stowed away in the Compartment	7
3	Levering Device Crank Handle Installed	8
4	Use of Breaker Lifting Adapter	8
5	View Showing Controls on the Panel	9
6a	Left Side of Breaker with Levering Device Arm in REMOVE Position	10
6b	DS-416 Breaker with Front Panel Removed	10
7	Right Side Showing Levering Device Arm in TEST Position	10
8	Rear View Showing Levering Device Arm in CONNECT Position	10
9	Method Used to Press Trip Plate and Lower Shutter with One Hand, Preparatory to Inserting Crank	12
10	Front View of Mechanism (Manual Spring Charge Except for DS-632/840)	15
11	Front View of Mechanism (Power-Operated Spring Charge)	15
12	Rear of Power-Operated Mechanism	15
13	Rear View of Mechanism (Left Close Spring Removed)	16
14	Arrangement of the Principal Parts of a Power-Operated Mechanism. The Close Spring is Shown in the Charged Position	17
15	Front View Showing Major Parts of the Crank Shaft Assembly Some Parts are Omitted for Clarity	18
16	Power-Operated Spring-Charge Details	19
17	Crank Shaft Assembly of Power-Operated Mechanism	20
18	Emergency Spring-Charge on Power-Operated Mechanism	20
19	Standard Schematic and Connection Diagrams for Power-Operated Breakers	21
20	Principal Parts in a Manually Charged Spring-Operated Mechanism	22
21	Spring-Charging Mechanism on Manual Operated Breakers	23
22	These Sketches Show the Four Basic Positions of Breaker and Linkage with Enlarged View of Trip Shaft and Latch	24
23	Shunt Trip Details Showing Trip Shaft Adjustment	25
24	Actuator	26
25	DS-632 Breaker with Front Panel Removed	27
26a	Bottom View of Breaker Unit Showing Interference Interlock, Motor Cut-off Switch and Other Details not Visible from Above	28
26b	Rear View Showing the Seismic Positioner	28
26c	Front View Showing Close Bar Guard	28
27	Drawout Unit Position Indicator	29
28	Relation of Shutter, Trip Plate, and Trip Shaft	32
29	Relation of Shutter, Interlock Cam and Levering Device Arms	33
30	Close-Release Interlock to Discharge Springs on Levering Out of Compartment and Conn. Position no Manual Close Interlock	34
31	Close Interlock to Prevent Efforts to Close a Breaker that is Already Closed	35
32	Padlock Device - Locked Trip Free and Shutter Raised	36
33	Three-Pole Assembly of DS-206 Pole Units on Frame	38
34	Three-Pole Assembly of DS-416/420 Pole Unit on Frame	39
35	Three-Pole Assembly of DS-632 Pole Units on Frame	40
36	Three-Pole Assembly of DS-840 Pole Units on Frame	41

List of Illustrations (Cont'd.)

Figure	Title	Page
37	Type DS-206 Pole Unit Assembly - Front View	42
38	Type DS-206 Pole Unit Assembly - Rear View	43
39	Type DS-416 Pole Unit Assembly - Front View	44
40	Type DS-416 Pole Unit Assembly - Rear View	44
41	Type DS-420 Pole Unit Assembly - Front View	44
42	Type DS-420 Pole Unit Assembly - Rear View	44
43	Type DS-632 Pole Unit Assembly - Front View	45
44	Type DS-632 Pole Unit Assembly - Rear View	45
45	Type DS-840 Pole Unit Assembly - Front View	45
46	Type DS-840 Pole Unit Assembly - Rear View	45
47	Moving and Stationary Contact Details DS-206	46
48	Moving and Stationary Contact Details DS-416	47
49	Moving and Stationary Contact Details DS-420	48
50	Moving Contact Details DS-632	49
51	Stationary Contact Details DS-632	50
52	Moving Contact Details	51
53	Stationary Contact Details	52
54	Breaker with Barrier Removed to Show Mounting of Arc Chutes	53
55	DS-206 Arc Chute with Details	53
56	DS-416/420 Arc Chute with Details	53
57	DS-632 Arc Chute with Details	53
58	DS-840 Arc Chute with Details	54
59	Schematic Illustration of Tripping System	55
60	Standard Amptector II-A Solid-State Trip Unit	56
61	Amptector II-A Trip Unit with Front Cover Removed	56
62	Optional Amptector I-A Solid-State Trip Unit	57
63	Amptector I-A Trip Unit with Front Cover Removed	58
64	Trip Actuator	62
65	DS-416 Breaker with Front Panel Removed (the DS-206 is Similar)	63
66	DS-840 Breaker Rear View Showing Sensors	63
67	Undervoltage Trip Device	64
68	Undervoltage Trip Device Operation	64
69	Overcurrent Trip Switch	65
70	Overcurrent Trip Switch Operation	65
71	High Load Switch	65
72	Latch Check Switch	66
73	Latch Check Switch Operation	66
74	Auxiliary Switch Construction Details	66
75	Amptector Trip Unit Test Kit (for Amptector I only)	67
76	Test Kit in Operation	68
77	DSL-206 Breaker Side View	69
78	DSL-206 Breaker Front View (DSL-416 is Similar)	70
79	DSL-416 Breaker Side View	70
80	Blown Limiter Indicator	71
81	DS-3200 Fuse Truck Front View	71
82	DS-3200 Fuse Truck with Front Cover Removed	72
83	DS-4000 Fuse Truck Side View	72
84	Contacts and their Adjustment, DS-206 Breaker	74
85	Contacts and their Adjustment, DS-416/420 Breaker	75
86	Contacts and their Adjustment, DS-632 Breaker	76

PURPOSE

This instruction book is expressly intended to cover the installation, operation and maintenance of Low Voltage Power Circuit Breakers, Types DS and DSL.

For application information, consult your nearest Westinghouse sales office, see Westinghouse Descriptive Bulletin 32-850, or appropriate ANSI Standards.

SAFETY

All Safety Codes, Safety Standards and/or Regulations as they may be applied to this type of equipment must be strictly adhered to.

All possible contingencies which may arise during installation, operation, or maintenance, and all details and variations of this equipment do not purport to be covered by these instructions. If further information is desired by purchaser regarding his particular installation, operation or maintenance of his equipment, the local Westinghouse Electric Corporation representative should be contacted.

List of Illustrations (Cont'd.)

Figure	Title	Page
87	Contacts and their Adjustment, DS-840 Breaker	77
88	Open Position Stop and Anti-Rebound Latch	78
89	Levering Mechanism	79
90	Lubrication Points on Left Side of Mechanism	80
91	Lubrication Points on Right Side of Mechanism	81

CAUTION

The circuit breakers described in this book were designed and tested to operate within their nameplate ratings. Operation outside of these ratings may cause the equipment to fail, resulting in bodily injury and property damage.

Introduction

These instructions cover the description, operation and maintenance of Westinghouse Type DS and Type DSL Low Voltage AC Power Circuit Breakers and Type DS Drawout Fuse Trucks. These breakers are usually supplied as part of low voltage metal enclosed switchgear of the four-position drawout type. These instructions apply only to the circuit breaker and its auxiliary drawout details which have been designed as a completely integrated drawout unit. Type DS Breakers (not DSL) may also be supplied in a fixed mounted version. In this case the sections of this book referring to the levering device, position interlocks, and spring discharge interlock will not apply.

The DS and DSL Circuit Breakers operate on the magnetic De-ion principle of interruption. In these breakers the arc rises into a series of insulated steel plates. The plates break the rising arc into a series of smaller arcs to cool and extinguish them and funnel the heat to ambient air.

DS and DSL Breakers are available for application at voltages from 208 to 600 Vac; with continuous currents of 50 to 4000 amps; and with interrupting capabilities up to 200,000 amps. Refer to the breaker nameplate for the complete rating information for any given breaker. Breakers conform to NEMA, ANSI and IEEE standards.

TYPE DS AND DSL BREAKERS ARE PROTECTIVE DEVICES. AS SUCH, THEY ARE MAXIMUM CURRENT RATED DEVICES. THEREFORE, THEY SHOULD NOT UNDER ANY CIRCUMSTANCES BE APPLIED OUTSIDE THEIR NAMEPLATE RATINGS. OPERATION OUTSIDE OF THESE RATINGS MAY CAUSE THE EQUIPMENT TO FAIL, RESULTING IN BODILY INJURY AND PROPERTY DAMAGE.

The available DS and DSL Breakers and their rated performance capabilities are given in Tables 1 and 2.

Table 1 – Type DS Breaker Ratings

Breaker Type	Frame Size, Amp.	Interrupting Ratings, RMS Symmetrical Amperes					
		With Instantaneous Trip			With Short Delay Trip ①②		
		208-240V	480V	600V	208-240V	480V	600V
DS-206	800	42,000	30,000	30,000	30,000	30,000	30,000
DS-206S	800	50,000	42,000	42,000	42,000	42,000	42,000
DS-416	1600	65,000	50,000	42,000	50,000	50,000	42,000
DS-416S	1600	65,000	65,000	50,000	65,000	65,000	50,000
DS-420	2000	65,000	65,000	50,000	65,000	65,000	50,000
DS-632	3200	85,000	65,000	65,000	65,000	65,000	65,000
DS-840	4000	130,000	85,000	85,000	85,000	85,000	85,000

① Also short-time ratings.
② Short circuit ratings of non-automatic breakers except the DS-840 which is 65,000.

Maximum voltages at which the interrupting ratings apply are:

System Voltage	Maximum Voltage
208 or 240	254
480	508
600	635

Interrupting ratings are based on the standard duty cycle consisting of an opening operation, a 15 second interval and a close-open operation, in succession, with delayed tripping in case of short-delay devices.

The standard duty cycle for short-time ratings consists of maintaining the rated current for two periods of 1/2 second each, with a 15-second interval of zero current between the two periods.

Table 2 – DSL Breakers - Current Limiting Type Breakers and Combinations

Type	DSL-206	DSL-416	DSL-632	DSL-840
Frame Size, Amperes	800	1600	3200	4000
Max. Interrupting Rating, RMS Symm. Amp., System Voltage 600 or Below	200,000	200,000	200,000	200,000

Notes: DSL-206 and DSL-416 include limiters integral with drawout breaker elements. DSL-632 includes DS-632 breaker and DS-3200 drawout fuse truck, in separate interlocked compartments. Maximum continuous rating limited to 3000A when fuse compartment is above breaker compartment in same unit. DSL-840 includes DS-840 breaker and DS-4000 drawout fuse truck, in separate interlocked compartments. Maximum interrupting rating limited to 150,000 amperes when 6000A fuses are used.

GENERAL DESCRIPTION

Westinghouse DS and DSL Circuit Breakers are horizontal drawout magnetic air circuit breakers. They are designed for use in Metal-Clad Switchgear assemblies having maximum voltages of 635 volts AC for DS Circuit Breakers and 600 volts for DSL. They are equipped with spring-stored, energy-closing mechanisms. All primary insulation to ground is glass polyester. These breakers have many common features, but they will vary in size and detail depending on the specific breaker type number and ratings. Figure 1 shows Type DS Low Voltage Power Circuit Breaker shipped inside its own compartment. Figures 78 and 79 show Types DSL-206 and DSL-416 Circuit Breakers.

Each DS and DSL Circuit Breaker consists of a basic breaker assembly, three interrupter assemblies (arc chutes), barriers, and an Amptector solid-state trip unit. DSL breakers have added current limiters to extend their interrupting range to 200,000 amps. Various accessories are also provided.

Basic Breaker Assembly

The basic breaker assembly includes a chassis, a control panel, an operating mechanism, a levering-in device, various interlocks, and three insulated pole unit assemblies mounted on a base.

On the front of the breaker are the control items needed for proper operation of the circuit breaker. They are: breaker position indicator, breaker open/closed indicator, levering device shutter and shaft, breaker trip plate, closing spring charged/discharged indicator, Amptector trip test terminal access, Amptector trip controls, closing spring charge handle, close bar and padlock plate.

Arc Chutes

Each arc chute contains vertical steel splitter plates, insulating spacers and plates. These are all assembled in an insulating arc chute jacket. The arc chutes mount on top of the pole units and are vented to atmosphere.

Optional Components

Optional components provided upon order are: undervoltage trip attachment, overcurrent trip switch, high-load trip switch, latch check switch, auxiliary switches.

Accessories

Levering crank and Amptector Test Kit are supplied as required.

Since the major components and the accessories depend on the particular type and rating of circuit breaker, packing lists provided with each shipment and more detailed sections of this instruction book should be referred to for special information. Any questions about the circuit breakers may be referred to the nearest Westinghouse Electric Corp. Sales Office. When making inquiries about type DS (DSL) circuit breakers always provide the specific type number, continuous current rating, mechanism type, applicable order numbers, breaker shop orders or style numbers, date of manufacture and other pertinent information as shown on the circuit breaker nameplate. Inquiries can be handled faster when complete information is provided with the initial inquiry.

Special Circuit Breakers: DS-206S and DS-416S

Table 1 gives the interrupting rating of DS-206S as 42,000 amperes at 600 volts AC. It is an improved model of DS-206, which has an interrupting capacity of 30,000 amperes at 600 volts AC. Yet, the maximum continuous current rating of 800 amperes is the same for both types.

Also, their parts are similar except for these differences:

1. DS-206S uses the three piece base of the DS-416 type, instead of the one piece molded base of the DS-206.

2. DS-206S uses the DS-416 arc chute.

3. DS-206S main disconnects have 50% more fingers than the DS-206.

4. DS-206S has twice as many main contacts and arms as the DS-206.

5. The pole unit hinge joint of DS-206S is a forked construction or a miniature version of the DS-416 hinge.

6. Fifty ampere sensors cannot be installed on DS-206S; but they can be put on DS-206.

Similarly, the parts of DS-416S are almost identical to those of DS-420. Their interrupting ratings are the same: 65,000 amperes at 480 volts AC and 50,000 amperes at 600 volts AC. But, the maximum continuous current rating of DS-420 is 2,000 amperes and for DS-416S it is 1600 amperes.

Compared to Type DS-416, DS-416S has higher interrupting ratings, giving it improved operating flexibility. See Table 1.

Safety Features

Type DS (DSL) Breakers are manufactured with several built-in interlocks and safety features to reduce hazards and provide proper operating sequences. **UNDER NO CIRCUMSTANCES SHOULD THEY BE MADE INOPERATIVE AS THIS MAY RESULT IN BODILY INJURY OR PROPERTY DAMAGE.**

1. Positive mechanical indicators on front panel show whether the breaker is open or closed, and whether the closing spring is charged or discharged.

2. Closing Spring Automatic Discharge - Mechanical interlocking automatically discharges the closing springs when the breaker is removed from its compartment.

3. Mechanical interlocking prevents levering of breaker unless its contacts are open. Contacts cannot be closed until the breaker is levered into TEST or CONNECT positions.

4. Mechanical interlocking prevents closing of breaker contacts while it is being levered into or out of its cell, or while it is standing in any intermediate location between the TEST and the CONNECT positions or the DISCONNECT position.

5. Provisions for Padlocking-Breakers can be padlocked open to prevent electrical or manual closing. This padlocking can also secure the breaker in the connected, test, or disconnected position by preventing levering.

6. In the CONNECT position automatic mechanical interlocking prevents the disconnecting or withdrawal of a closed breaker. This avoids drawing dangerous, destructive arcs on the disconnecting contacts when the circuit is energized.

7. In the REMOVE position mechanical interlock system prevents the closing springs from being charged or remaining charged.

8. The integral fuses on Types DSL-206 and DSL-416 breakers are inaccessible until the breaker is completely withdrawn from its compartment, thereby assuring complete isolation.

Likewise, the Type DSL-632 and DSL-840 fuses are inaccessible until the separate fuse truck is completely withdrawn and the fuses isolated. The fuse truck is key interlocked with the breaker to prevent withdrawing or insertion unless the breaker is open.

Recommended Safety Practices

Type DS circuit breakers are complex electrical devices containing high speed, high energy, operating mechanisms. They are designed to operate within the current and voltage limitations on the breaker nameplate. Do not apply these breakers to systems with currents and/or voltages exceeding these limits.

1. To perform work on Type DS Circuit Breakers requires personnel with training and experience in high voltage circuits. Only qualified electrical workers, familiar with the construction and operation of such equipment and the hazards involved, should be permitted to work on these circuit breakers.

2. Only Qualified Persons as defined in the National Electric Safety Code should be permitted to assemble, operate or maintain these breakers.

3. The breakers are equipped with various interlocks. **DO NOT MAKE ANY OF THE INTERLOCKS INOPERATIVE AS THIS MAY RESULT IN BODILY INJURY OR PROPERTY DAMAGE.**

4. Never put a breaker into a cell without barriers and arc chutes.

5. Always be sure that all switch hardware is in place and bolted tightly before inserting breaker into cell.

6. Do not lift breaker with ordinary crane hooks, ropes, chains, etc., to avoid possible damage to parts or dropping the unit. Use breaker lifting adapter.

7. Use handle on front panel of circuit breaker to move it into or out of cell. Keep fingers and hands off top, bottom or sides of breaker when moving it into or out of cell to prevent bodily injury.

8. When operating breaker without arc chutes and barriers, keep hands, arms, head and tools out of area where contacts travel. Severe bodily injury could result from being struck by the moving contacts either as they open or close.

9. Be sure circuit breaker contacts are open and closing springs are discharged before doing maintenance work.

10. Be sure circuit breaker contacts are open and closing springs are discharged after completing maintenance work.

11. Never leave breaker in an intermediate position in a cell. Always have the breaker either in the disconnect, test or connected position because control circuits may be either improperly connected (or disconnected) and may cause electrical failures.

12. Avoid trip-free type operation because it causes more shock on some parts of breaker than normal closing operations. Refer to last paragraph in Item 4.1.

13. Before operating breaker in test position, be sure that closing the breaker will not cause another electrically interlocked breaker to inadvertently trip.

Section 1 - Receiving, Handling and Storing

1.0 RECEIVING AND HANDLING

The circuit breakers may be shipped completely assembled and inside their respective compartments.

Receiving and handling of this equipment is covered in Westinghouse Instruction Book 32-690 for Low-Voltage Metal-Enclosed Switchgear, Types DS and DSO.

If the circuit breakers are not shipped in the switchgear assembly, they will be packed separately in individual cartons or crates. These packages must be handled with care to avoid hidden damage to the circuit breakers.

If the circuit breakers have been shipped in the switchgear assembly, proceed as described in Section 2. If the breakers have been shipped in separate packages, remove them from the crate or carton carefully so as not to cause damage. Place the breakers on the switchgear extension rails. (See Section 2.3 before attempting to lift breakers.) Remove the insulating barriers and arc chutes. Inspect the contact structures to be sure no damage has occurred during shipment. Replace the arc chutes and insulating barriers and proceed as described in Section 3.

1.1 STORING

If it is necessary to store the equipment before installation, keep it in a clean dry place, protected from dirt and water and with ample air circulation and heat, if necessary, to prevent condensation. Like all electrical apparatus, these units contain insulation. Although it is of highest quality, it, like all other insulation, must be protected against dirt and moisture. Refer to Instruction Book 32-690-C for details.

NOTE

Breakers that have been stored or have infrequent operations shall be operated a minimum of five times before being placed in service.

1.2 WEIGHTS: CIRCUIT BREAKERS AND FUSE TRUCKS

Table 3 gives the approximate weights of DS and DSL circuit breakers. They will vary slightly due to the differences in functional components of the individual DS Breaker, and the size of the current limiters supplied on DSL Breakers. Fuse truck weights will vary due to differences of fuse sizes.

Table 3 – Approximate Weights

Drawout Elements	Pounds
DS-206 Circuit Breaker	150
DS-206S Circuit Breaker	160
DS-416 Circuit Breaker	195
DS-416S Circuit Breaker	200
DS-420 Circuit Breaker	200
DS-632 Circuit Breaker	300
DS-840 Circuit Breaker	400
DSL-206 Circuit Breaker	200
DSL-416 Circuit Breaker	260
DS-3200 Fuse Truck	325
DS-4000 Fuse Truck	430

Section 2 - First Removal of Breaker from Compartment

2.0 GENERAL

To examine and become familiar with the construction and operation of the breaker, it first must be withdrawn from the compartment. There are rails provided which permit the breaker to be rolled out of the compartment so that it can be examined on all sides and operated. First unlatch and open the compartment door.

2.1 SETTING THE RAILS IN FRONT OF THE COMPARTMENT

Refer to Figures 1 and 2. There are two rails for each breaker compartment which, when not in use, are stored on the inside of the compartment in a back-sloping position. Withdraw each rail completely and let it down into a horizontal position, as shown in Figure 2.

The first movement of the breaker toward the front of the compartment must be done with the levering device.

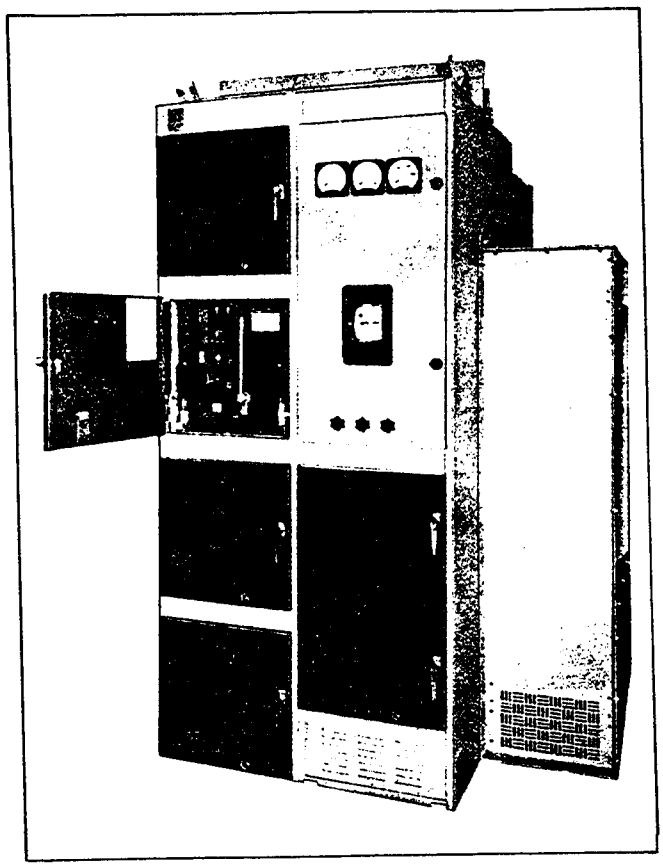

Fig. 1 *The Type DS Low Voltage Power Circuit Breaker is Shipped Inside Its Own Compartment (388880*)*
*PHOTO NUMBER

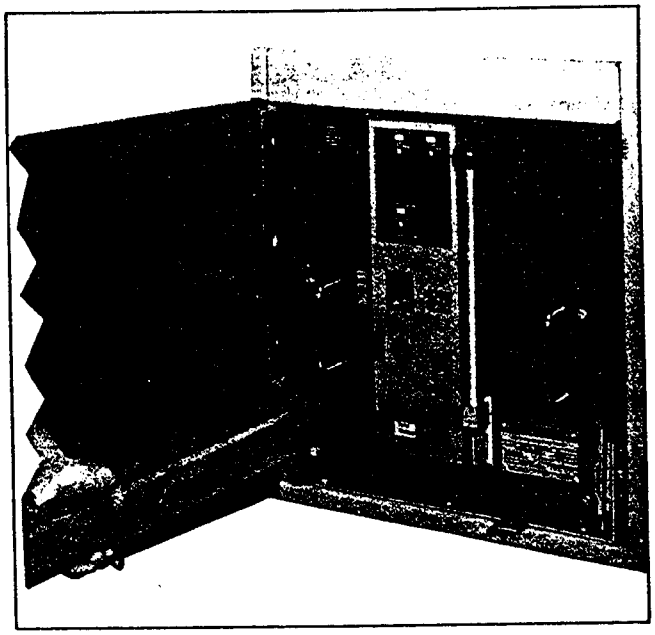

Fig. 2 *Rails are Stowed away in the Compartment. Withdraw as Shown (383027)*

2.2 REMOVING SHIPPING BRACE

Before the circuit breaker element can be withdrawn from its compartment for the first time, two shipping braces must be removed from the lower part of the breaker front panel. These braces are small steel angles bolted to the front of the circuit breaker and to the bottom cradle of the circuit breaker compartment.

During shipment, the front wheels of the breaker are lifted approximately 1/16 inch above the compartment rails, and the unit is held part way between DISCONNECT and TEST positions by means of its levering device and the shipping angle.

1. With a screwdriver, remove the two (2) outside .25-20 panhead screws with captive washers from the bottom leg of the two angles. Do not discard, as later they will be returned to their tapped holes. Do not remove the center screw from the bottom cradle.

2. The levering device is now used to release the breaker from the shipping position. When the breaker is part way between DISCONNECT and TEST positions as described above the breaker levering device interlock will hold the shutter down and the trip plate depressed. The hex shaft of the levering device will be exposed and ready to receive the levering crank handle. See Figure 3. Insert the crank

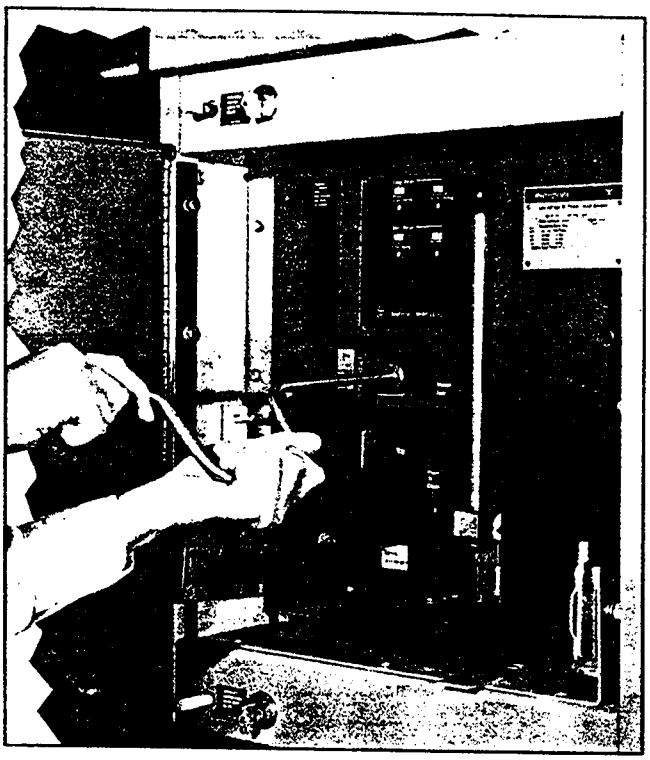

Fig. 3 *Levering Device Crank Handle Installed. Read Section 2.2 on this Operation (391177)*

and turn in a counter-clockwise direction and observe the action of the drawout position indicator. The indicator will move down to the REMOVE position at which time the load on the crank handle increases because a stop has been reached.

NOTE

DO NOT APPLY FORCE ON THE CRANK HANDLE AFTER THE STOP HAS BEEN REACHED AS THE BREAKER IS NOW FREE.

3. When the position indicator shows the levering device to be in the REMOVE position, remove the hand crank. Pull the breaker out onto the extended rails. This will require more effort than normal as the rear wheels are jammed into the cradle hold-down hooks by two lengths of plastic tubing. Refer to illustrations in the stationary structure Instruction Book 32-690 covering shipping braces.

4. Remove the two (2) .25-20 panhead screws holding the two shipping angles to the front panel of the breaker. Care must be exercised to prevent marring the front panel. Two or more flat washers are used between the angle and front panel for shipping. Discard the angles.

5. Immediately replace the two panhead screws discarding all washers.

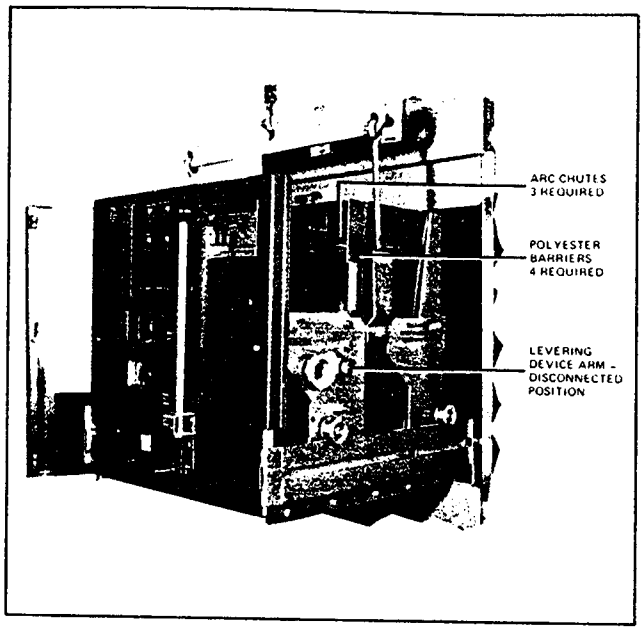

Fig. 4 *Use of Breaker Lifting Adapter (391187)*

6. With the breaker pulled completely to the end of the rails, remove the two (2) six inch long pieces of split plastic tubing that are on the rear of the stationary rails immediately below the hold-down hooks. This tubing is for shipping purposes only and is to be discarded.

7. The stationary secondary disconnecting contacts are covered by a sheet of insulating material during shipment. This must be removed and discarded before the breaker is moved to the TEST or CONNECTED position.

8. Push the breaker back into its compartment, and replace the two (2) panhead .25-20 screws at the front edge of the cradle.

2.3 LIFTING THE BREAKER

When it is necessary to lift the breaker off the rails, all lifting should be done only with the accessory lifting adapter. DO NOT ATTEMPT TO LIFT BREAKER WITH ORDINARY CRANE HOOKS, ROPES, CHAINS ETC., AS VITAL PARTS SUCH AS WIRING, BARRIERS AND ARC CHUTE PARTS MIGHT BE DAMAGED. Figure 4 shows a view of the breaker with the lifting adapter in place. The lifter consists essentially of two sheet steel hooks specially shaped to hook under the top edges of the large openings on each circuit breaker side sheet, or in the specially provided lifting lugs on some breakers, and a spreader. Actual lifting may be with a crane, chain block or with the optional lifting mechanism which can be supplied for the switchgear. The breaker must be pulled completely to the end of the rails.

Section 3 - Preliminary Examination of Circuit Breaker

3.0 GENERAL

Read these instructions carefully and look at the breaker as it stands out of the compartment before trying to operate it. Refer to Figures 5, 6, 7 and 8.

The complete drawout element includes the circuit breaker itself and its auxiliaries. The circuit breaker consists of four major components:

1. The operating mechanism.

2. The contacts, operated by the mechanism.

3. The arc chutes, which interrupt the arc which always results from opening the breaker under load or short circuit conditions.

4. The Amptector® solid-state overcurrent tripping system.

The remainder of the drawout element includes the following auxiliary components:

1. Interphase insulating barriers which isolate the arc chutes from each other and from ground.

2. Drawout element frame and rollers.

3. The levering device, for placing the element into its various positions inside the compartment.

4. The main disconnecting contacts, for connecting the breaker to power source and load.

5. The secondary contacts, for connecting the control circuits to the electrical operating parts of the element.

6. The interlocks, which increase the safety of operation.

7. Drawout element position indicator.

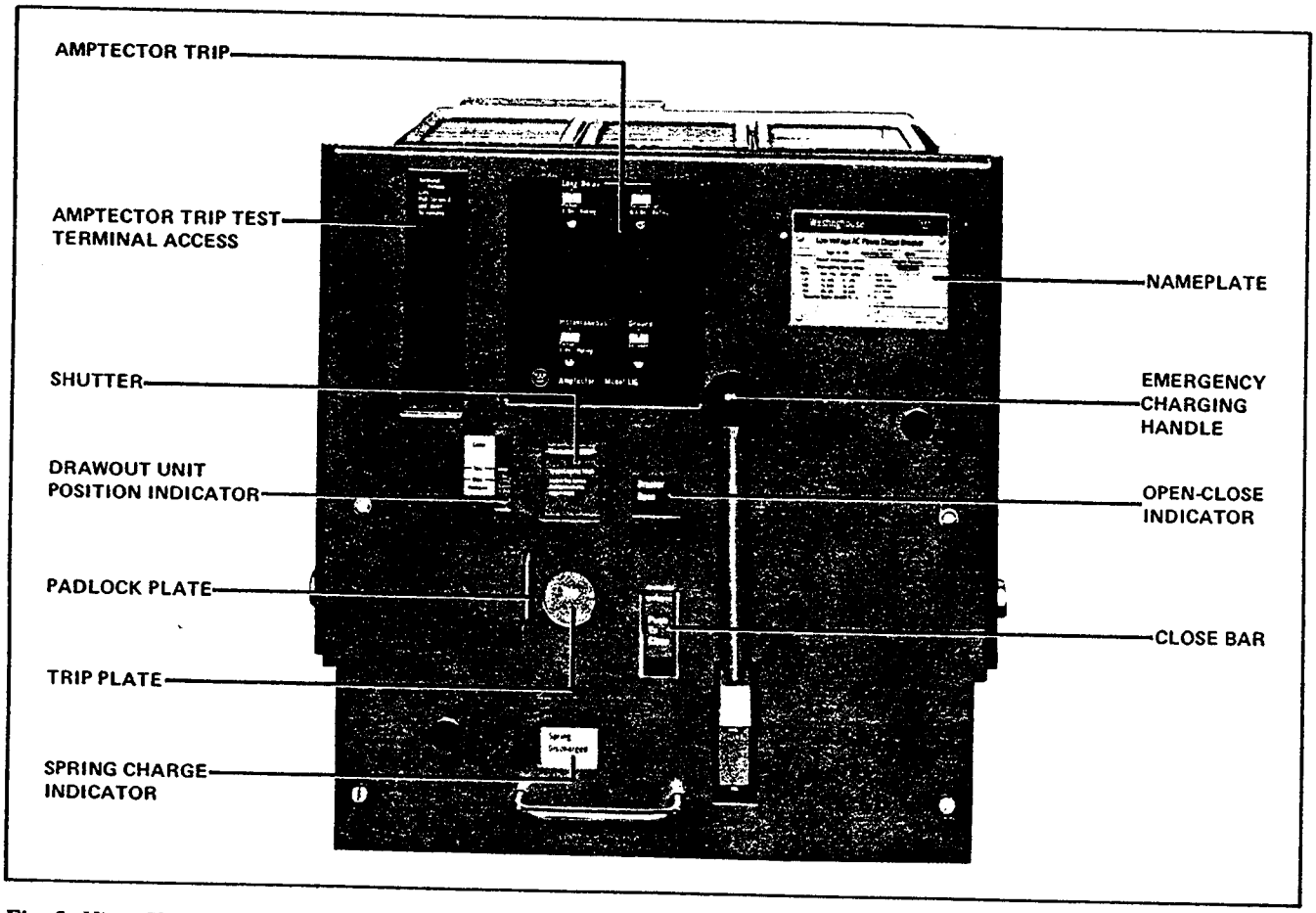

Fig. 5 *View Showing Controls on the Panel (391066)*

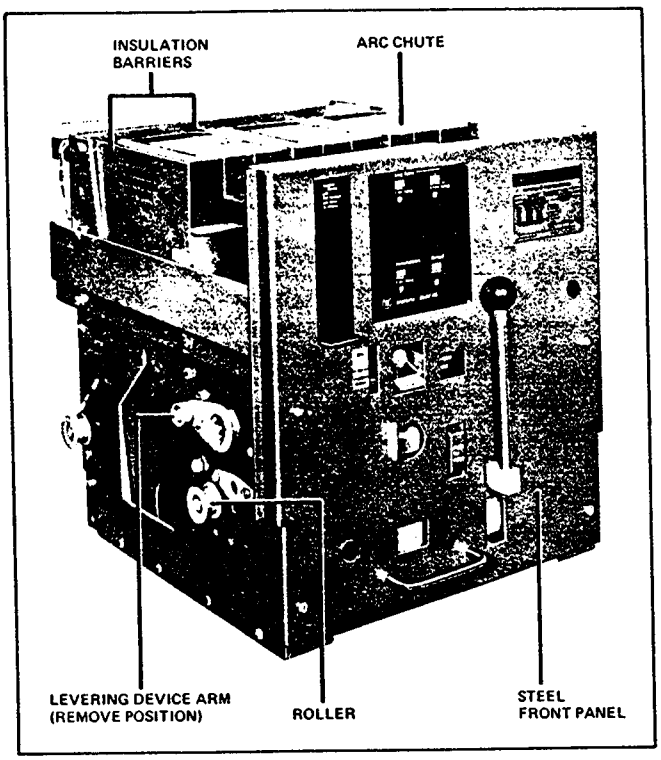

Fig. 6a *Left Side of Breaker with Levering Device Arm in REMOVE Position (391065)*

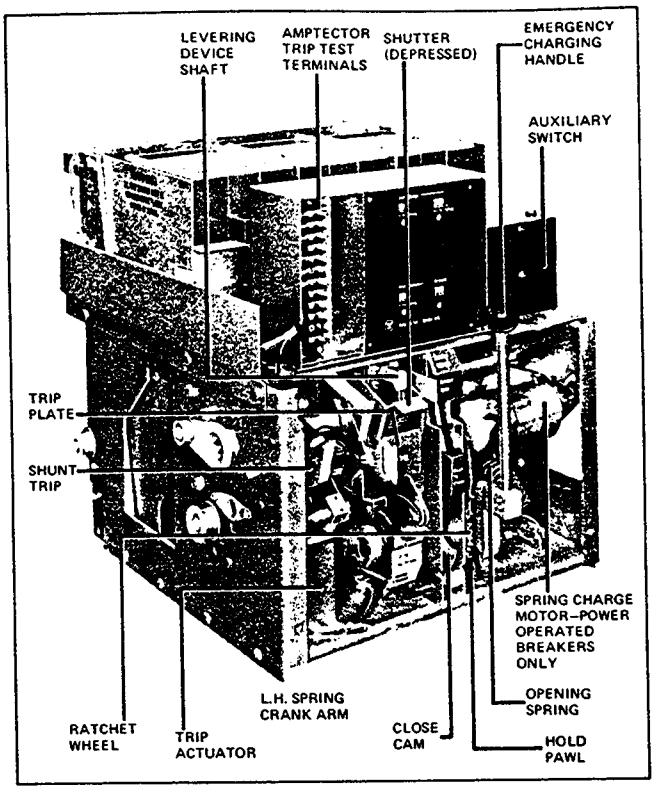

Fig. 6b *DS 416 Breaker with Front Panel Removed (391070)*

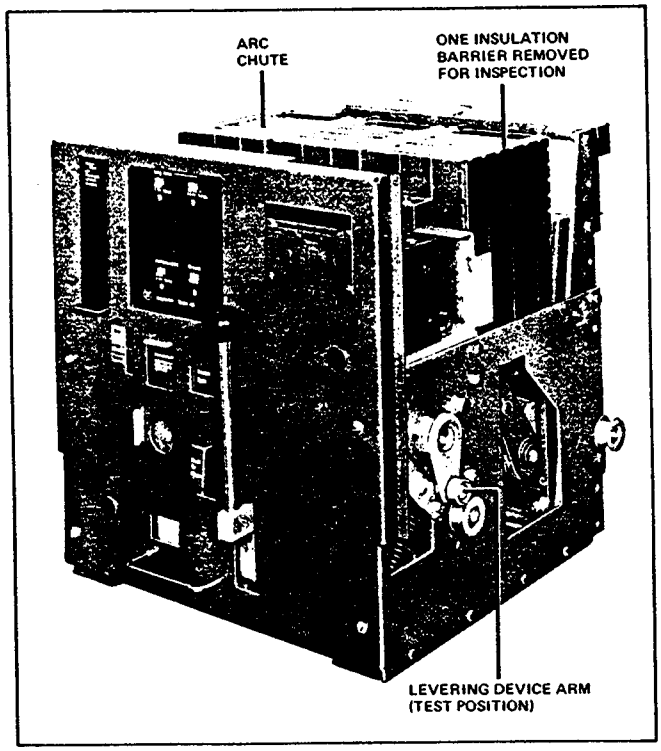

Fig. 7 *Right Side Showing Levering Device Arm in TEST Position (391068)*

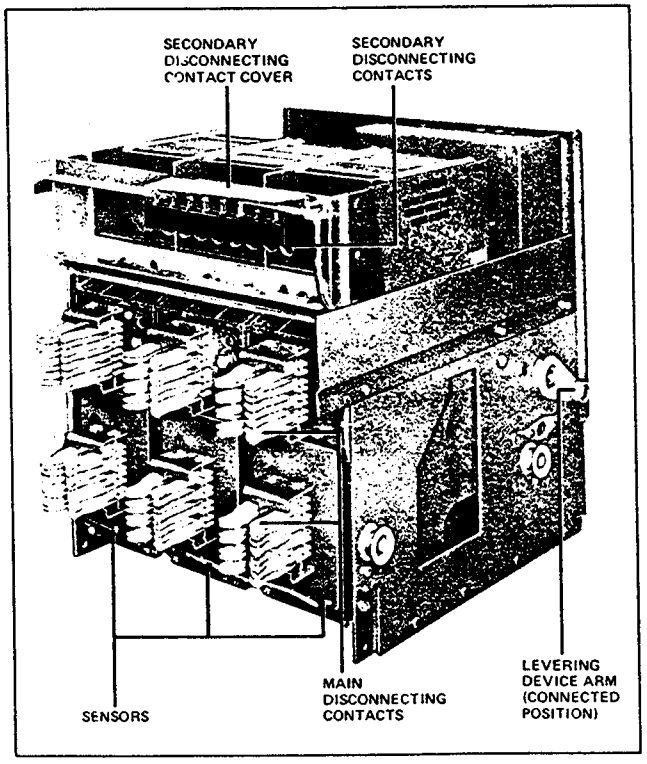

Fig. 8 *Rear View Showing Levering Device Arm in CONNECT Position (391067)*

8. Open-Close indicator.

9. Spring charge indicator.

10. The close bar and trip plate.

11. Steel front cover.

12. Nameplate with complete rating information.

The Type DSL-206 and DSL-416 drawout elements also include the following components:

1. Current limiters.

2. Isolating transformers, connected in parallel with the limiters.

3. Combination "Blown Limiter Indicator" and anti-single phase device, connected to the isolating transformers, actuated by blowing of one or more of the current limiters. This device has individual phase indicators and a common "RESET" button extending through the front cover.

Each breaker is equipped with a spring-type stored energy closing mechanism. This mechanism closes the circuit breaker contacts with the necessary speed and force, independently of the operator. Basically, the closing springs must first be charged or cocked before the breaker can be closed. The springs are then released by releasing the spring release latch. The breaker is opened by releasing the tripping latch.

3.1 INDEPENDENT MANUAL AND POWER-OPERATED BREAKERS

3.1.1 Closing Facilities

On manually operated breakers, the closing springs can be charged only by hand, by means of the spring-charge handle. The actual closing of the breaker is done only by hand-push on the close bar. As optional equipment, the electrical spring release attachment normally supplied only on power-operated breakers can be supplied on manually operated breakers.

On power-operated breakers, the springs are normally charged by an electric motor. Closing may be done electrically by an electro-magnet which lifts the closing spring release latch. Both of these operations can be done by hand if the control power source fails.

3.1.2 Tripping Facilities

The breaker can be tripped open by hand by pushing with the finger on the trip plate on the breaker panel or the trip plate on the breaker compartment door (the latter is operative only when the breaker is in the connected position).

The breaker can also be tripped electrically by the following devices:

1. Shunt trip device, optional equipment on manually operated breakers.

2. Trip Actuator, energized from the Amptector trip unit.

3. Undervoltage Trip Device (Optional on all breakers)

4. Blown Limiter Indicator (for DSL breakers)

3.2 LEVERING DEVICE

The drawout element has four normal positions in its compartment, determined by the levering device:

1. The REMOVE position, Figure 6.

2. The DISCONNECT position.

3. The TEST position, Figure 7.

4. The CONNECT position, Figure 8.

The REMOVE position is the first position in the compartment as the element is pushed directly by hand as far as it will go. The DISCONNECT, TEST, and the CONNECT positions are reached only by means of the levering device. This is hand operated with a removable crank handle. This handle is placed on the levering device worm shaft, which is exposed by depressing the shutter.

Section 4 - Basic Operating Instructions

4.0 GENERAL

The breaker is now ready for trial mechanical operation. Keep the breaker standing on the compartment rails, out in front of the compartment. Examine it externally for any signs of obvious damage or foreign material. When everything appears to be in order, perform the following operations as "dry run" practice. If any malfunctioning is found during these operations, see that it is corrected before further operations or before placing the breaker in service.

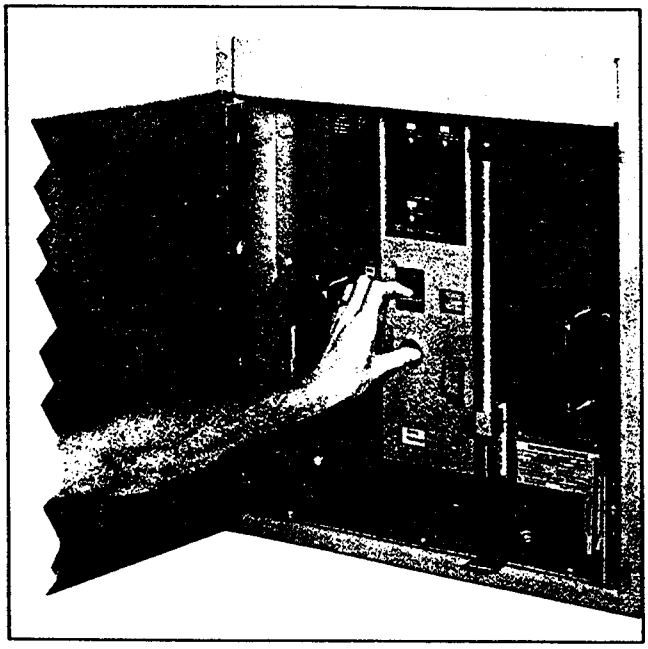

Fig. 9 *Method Used to Press Trip Plate and Lower Shutter with One Hand, Preparatory to Inserting Crank (383028)*

4.1 LEVERING DEVICE

If the circuit breaker was shipped in a separate package, the levering device was probably left in the REMOVE position. If not it will be necessary to return it to this position. Push in the TRIP plate and depress the shutter over the levering shaft, using one hand, as shown in Figure 9, and insert the levering crank as shown in Figure 3. Turn the crank counterclockwise until the position indicator is in the REMOVE position, at which time the load on the crank handle increases because a stop has been reached. Now rotate the crank clockwise to simulate levering the breaker inward toward the CONNECT POSITION. Watch the movement of the levering device arms. At the start of cranking the arms are horizontal, with rollers toward the rear, Figure 6. As the crank is turned clockwise the levering device arms rotate downward. When they have moved approximately 40° from the horizontal, the shutter will rise until it touches the crank socket. The position indicator will be opposite "DISC" which is the DISCONNECT position wherein the breaker is held in its compartment with both main and secondary contacts disengaged. If the crank is withdrawn, the shutter will close completely, and the breaker may be locked in this position as later described in Section 5.1.8.5 of this instruction book. There is very little movement of the breaker into its compartment between the REMOVE and DISCONNECT positions.

Continued rotation of the crank in the clockwise direction moves the arms downward to the vertical position, and the indicator will show "TEST" as in Figure 7. The shutter will rise.

Further clockwise rotation of the crank handle rotates the arms to the CONNECT position. This is about 65 degrees from the test position, as shown in Figure 8. When this position is reached, the crank suddenly becomes hard to turn. At this point, stop turning the crank, as the worm shaft bottoms in the tapped hole of the stop nut.

NOTE

Further turning effort is useless. The breaker will be secure, even if the stop is only lightly touched. Remember this when actually levering the breaker into the connect position.

Rotation of the crank counterclockwise will turn the levering device arms to withdraw the unit from the CONNECT position to the TEST position and then to the DISCONNECT and REMOVE positions. Then, when the crank is removed from the worm shaft, the shutter will remain down and the trip plate will remain trapped by the shutter.

NOTE

If the breaker is levered out from the TEST position to the REMOVE position with the closing springs charged, a trip-free "closing" operation automatically will be performed but the breaker contacts will not close. When a power-operated breaker is removed from cell, it must go through a trip-free operation.

4.2 CHARGE THE CLOSING SPRINGS

The closing springs must be charged before the breaker can be closed. To manually charge the closing springs, the

levering device arms must be rotated away from the REMOVE position to the TEST position. If charging is attempted in the REMOVE position, the closing cam will rotate past the charged position and go through a trip-free "closing" operation, i.e., the springs will discharge without moving the breaker contacts. Do not attempt to charge the springs in the DISCONNECT position as the same action may occur. After turning the levering device to TEST position, manually charge the springs. On manually operated breakers, the springs are charged by a single stroke downward on the spring-charge handle, rotating it about 90° toward you until it suddenly becomes very easy to move and then tends to run away from your hand. At the same time, you will hear a metallic "click!" as the over center closing spring stop is reached. Note that the spring charge indicator now shows "Spring Charged."

CAUTION

Do not release the handle before the charging operation is completed. To release handle before charging completion will return handle upwards with such velocity that it may break the handle knob or cause bodily injury.

CAUTION

Hold breaker to prevent tilting forward when hand charging closing springs with the breaker on the extended rails. Otherwise, it may topple to the floor and cause bodily injury or equipment damage.

On power operated breakers, a short spring-charge handle is included for emergency operation. This works on a ratchet principle, and requires 10 to 12 pumping operations to completely charge the springs. At this point, the same metallic "click" will be heard; and the spring charge indicator will show "Spring Charged." The handle must not be forced beyond this point.

NOTE

Power-operated breakers, when being levered into the compartment, will have the spring-charge motor run and charge the spring automatically as the TEST position is reached.

4.3 CLOSE THE BREAKER

The breaker can be closed only when the following conditions are met:

1. The closing springs are charged.

2. The levering arms are in either the TEST position, as in Figure 7 or in the CONNECT position, Figure 8.

3. The levering device crank handle has been removed and the shutter is closed.

4. Undervoltage trip device (if included) has been energized.

5. Blown limiter indicator (for DSL breakers only) is reset.

Having met these conditions, close the breaker by pushing on the close bar. Note that the breaker position indicator shows "Breaker Closed", against a red background. Also that the spring-charge indicator now shows "Spring Discharged."

Some power-operated breakers are interlocked to prevent manual closing from the close bar on the front panel when in the CONNECT position. In this case crank the levering device to the TEST position to operate. This interlock is covered by Section 5.1.8.2.

It is possible to recharge the springs immediately after closing the breaker. This results in increased strain on the mechanism, and it is recommended that this be done only if the operating procedure requires this condition.

NOTE

If closing is attempted with the levering arms in other than the TEST or CONNECT positions, with or without the levering crank in place, a trip-free "closing" operation is performed but the breaker contacts do not close. This trip free type of operation results in more shock on some parts of the mechanism than normal closing operations. Therefore, this type of operation should be avoided if possible.

4.4 OPEN THE BREAKER

The breaker can be opened in the following ways:

1. By hand operation of the trip plate (on the breaker or on the compartment door.)

2. Automatically by overload, short circuit or undervoltage condition.

3. Breakers equipped for power operation can be tripped electrically by a shunt trip device energized by hand switch or relay.

For the present purpose of getting acquainted with the breaker, open it by pushing on the trip plate. Note that the breaker position indicator now shows "Breaker-open", against a green background.

NOTE

On breakers equipped for power operation, when they are in the compartment and in either the TEST or CONNECT position, the spring-charge motor normally runs automatically and charges the closing springs as soon as the breaker opens. The closing springs normally remain discharged while the breaker stands in the closed position. Also see Section 5.1.2.1.

Now to become better acquainted with the breaker, charge the closing springs, close and open the breaker several times. Also, place the levering crank handle on the levering device work shaft and rotate the levering arms to their various positions by turning the levering crank handle. **Leave the levering arms horizontal, with rollers toward rear of breaker, i.e. in the remove position.**

The breaker is now ready to be put into its various operating positions in the compartment.

4.5 PLACE THE BREAKER IN THE TEST POSITION

Push the breaker into the REMOVE position.

YOU WILL NOTE THAT, WITH THE COMPARTMENT DOOR OPEN, THE FRONT PANEL ASSEMBLY OF THE BREAKER FORMS A STEEL PROTECTIVE SHIELD.

Place crank on the levering device worm shaft. Turn crank clockwise until drawout unit position indicator shows "TEST." Remove the levering device crank. The shutter will close over the hex shaft. All manual operations can now be performed. On power operated breakers the spring is charged automatically as the breaker arrives in the TEST position. The breaker can also be opened with it shunt trip device, and it can be electrically closed with the spring release device.

4.6 PLACE THE BREAKER IN THE CONNECT POSITION

Press the trip plate and lower the shutter. Place the crank handle on the levering device worm shaft and turn the crank clockwise until the CONNECT position stop is reached, as indicated by sudden increase in load on the crank, as previously described in paragraph 4.1.

Note however, that before the stop is reached, an increase in load on the crank will be felt after the breaker has moved about an inch. This is caused by the making up on the main disconnecting contacts. The load on the crank will decrease after reaching a peak. The next increase in load is when the stop is reached.

NOTE

Do not try to crank after the stop is reached. Further tightening of the crank does not help keep the breaker in position. When the crank handle is removed, the shutter and the trip plate should snap into normal position.

4.7 REMOVE THE BREAKER FOR FINAL INSPECTION

Withdraw the breaker from the CONNECT position in the compartment to the end of the extended rails following the reverse procedure described above. Inspect it thoroughly to see that no foreign objects have lodged within it. If any defects were found during these preliminary operations, complete their corrections at once.

4.8 FINAL INSPECTION

MAKE SURE THE THREE (3) ARC CHUTES ARE PROPERLY INSTALLED. MAKE SURE ALL FOUR (4) INSULATING BARRIERS ARE PROPERLY INSTALLED.

1. With the breaker withdrawn, rotate levering device to connected position before attempting to charge the spring.

2. Close and trip the breaker several times as previously described.

3. Return the levering device to the remove position; i.e., with the roller arms pointing toward the rear as shown in Figure 6.

4. This completes the "dry run."

4.9 AMPTECTOR TRIP SETTINGS

When the breaker is shipped, the calibrating dials of the Amptector trip unit are at the nominal settings. For specific overload tripping characteristics to coordinate with the load or the system, refer to Section 8 and Curves found later in this instruction book.

4.10 PLACE THE BREAKER IN SERVICE

Lever the breaker into the connected position as previously described, and latch the compartment door.

Section 5 - Description and Explanation of Operation

5.0 GENERAL

The following paragraphs give a general description and explanation of the operation of the breaker.

5.1 THE OPERATING MECHANISM AND HOW IT WORKS

The operating mechanism is of the spring charged stored energy type. This means that it consists of two major parts:

(1) The stored energy or spring-charging mechanism.

(2) The mechanism for closing and opening the breaker.

The basic parts of these are combined into one sub-assembly illustrated in Figures 10, 11, 12, and 13. There are two varieties of mechanisms for the complete line of DS and DSL breakers:

Power-Operated

Manually Operated

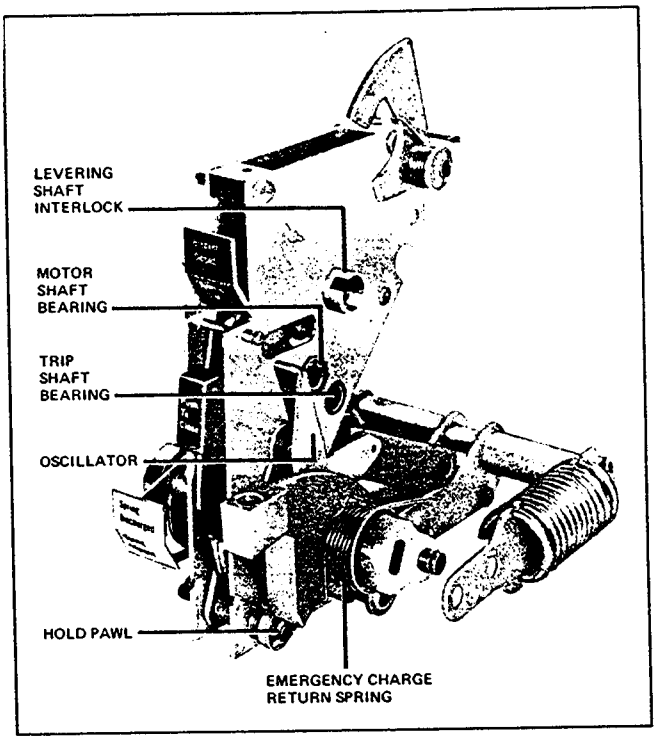

Fig. 11 *Front View of Mechanism (Power-Operated Spring Charge) (385301)*

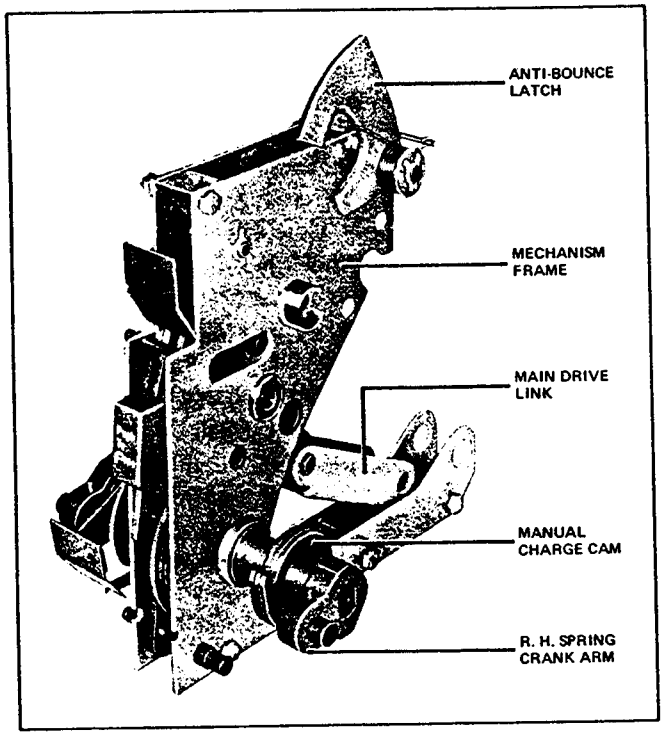

Fig. 10 *Front View of Mechanism (Manual Spring Charge Except for DS-632/840) (383035)*

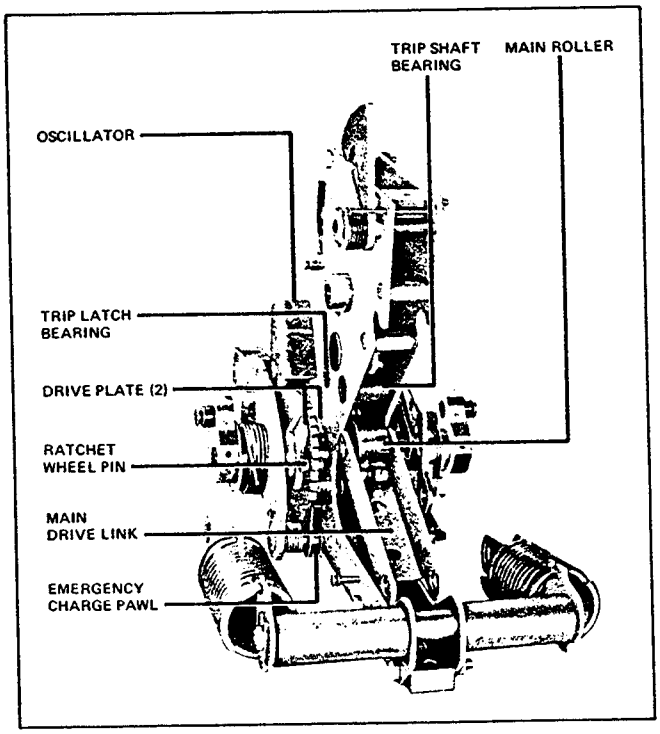

Fig. 12 *Rear of Power-Operated Mechanism (385303)*

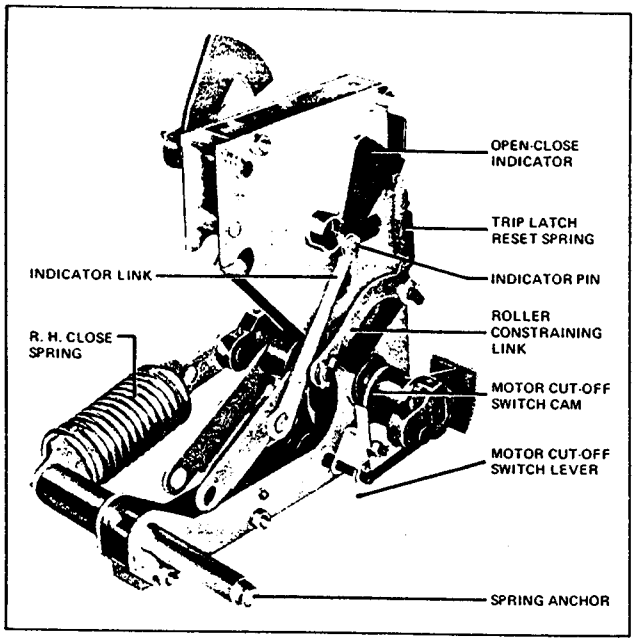

Fig. 13 *Rear View of Mechanism (Left Close Spring Removed) (383034)*

5.1.1 Power-Operated Mechanism

In the power-operated version, the mechanism is equipped with a universal-type motor for automatic charging of the closing springs. It is equipped with a spring release device for electrically closing through a control switch push-button, or other circuit-making device. A shunt trip device is supplied for remote tripping through a control switch, relay, etc. In the absence of control voltage, or whenever desirable, the closing spring can be charged by hand with the emergency charging handle. Hand closing of the breaker can be done by means of the close bar. Hand opening of the breaker can be done by means of the trip plate.

5.1.2 Explanation of Spring-Charging Mechanism for Power-Operated Breakers

Figure 14 is an isometric diagram of the principal parts of a completely power-operated mechanism.

Figure 15 is a front view drawing showing the principal parts of the spring-charging portion of this mechanism. Other parts are omitted for clarity. Figures 16a and 16b show in greater detail the major parts of the spring-charging mechanism in the two basic positions:

Closing springs charged (16a).

Closing springs discharged (16b).

Referring to Figure 15, the basic elements are mounted on the crank shaft (8). This is a straight shaft with four flats machined on it, and a crank arm (11) attached to each end. Each crank arm connects to its closing spring (9) by a formed spring end (10) Figure 16b. The rear of the springs anchor to the rear of the mechanism frame. The crank arms (11), motor cutoff switch cam (7), close cam (6) and two drive plates (25) have matching flats; and are thus anchored to the crank shaft. The spring charge indicator (12) ratchet wheel (17), oscillator (30), and emergency charge device (26) do not have internal flats but are mounted on separate bushings and are free to rotate on the crank shaft.

Figure 17 is an exploded view of the crankshaft parts.

Figure 16a is a view looking into the right end of the crankshaft, and shows the position of the components when the springs are charged.

Figure 16b is a partial view with the springs discharged.

The motor crank shaft assembly (29), carrying a roller for driving the oscillator, is pivoted in the right hand mechanism side frame. The hold pawl (18) is mounted by means of a pin on the mechanism side frame as shown.

In operation, rotation of the motor crank pushes the oscillator arm counterclockwise to make the oscillator pawl (28) push a tooth in the ratchet wheel (17) and rotate the ratchet wheel slightly more than one tooth in the counterclockwise direction. The holding pawl snaps behind the corresponding advanced tooth, and holds it against the torque of the closing springs while the oscillator arm rotates back clockwise to catch another ratchet tooth. Thus the ratchet wheel is rotated counter-clockwise until the ratchet wheel pin (21) engages the two drive plates (25) which in turn rotate the crank shaft and the crank arms in the same direction until the arms are slightly past horizontal dead center. Since the close cam (6) is rigidly mounted on the crank shaft, the same as the drive plates, it has rotated the same amount as the plates. The close cam carries a stop roller as shown in Figure 22b. Just after horizontal dead center of the crank arms is reached, the torque of the closing springs starts to rotate the crank, independently of the driving motor. However, the stop roller on the close cam quickly stops the movement of the crank at only a few degrees over center and holds it there by coming against the spring release latch. This is the "spring charged" position. The motor cut-off switch cam (7) operates the switch (15) through a lever (13) at this time, and the motor stops.

At the instant that the springs snap over dead center, the lobes of the drive plates raise the pawl lifters (27), and prevent the oscillator pawl (28) from engaging the next tooth in the ratchet wheel. Thus the oscillator is free and renders the exact stopping point of the motor not critical.

When the spring release latch is moved below the level of the stop roller, as later described, the close cam is free to rotate; and the two closing springs rotate the crankshaft counterclockwise to close the breaker contacts. They assume the position shown in Figure 16b and the cam as in 22c. During rotation, the drive plates move away from the ratchet wheel pin. The ratchet wheel does not rotate during the closing operation thus preventing excessive wear on the teeth and pawls.

Power-operated breakers are also equipped for emergency hand charging the closing springs. Refer to Figure 21. This operation is similar to that of the motor and oscillator except a separate emergency charge pawl (33) is used to advance the ratchet wheel (17) several teeth on each stroke of the charge handle (34). This device (26) also pivots on the crank shaft.

5.1.2.1 Power Operation

The electrical operation of the spring-charging motor circuit is as follows:

The standard basic schematic and connection diagrams are shown in Figure 19a and b. Device Y is the anti-pump relay.

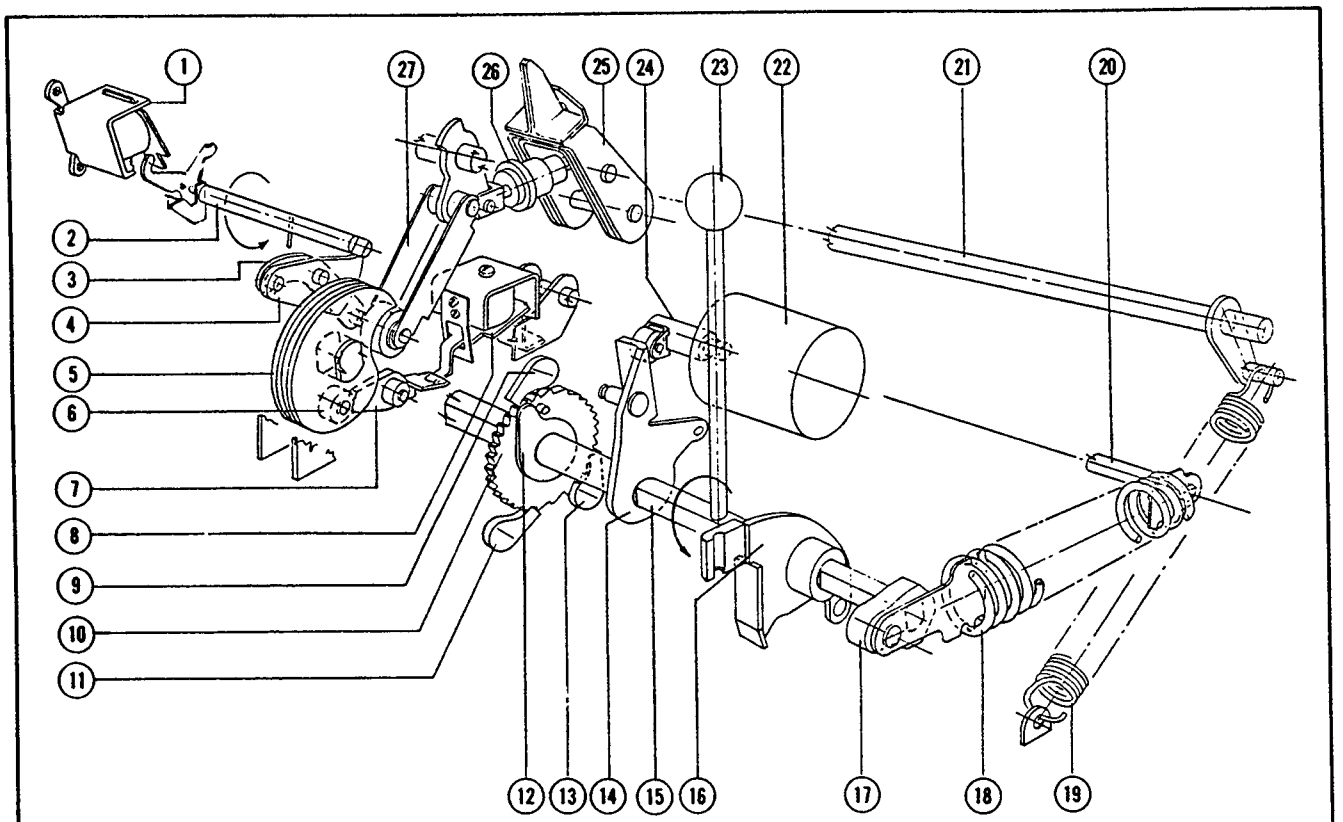

Fig. 14 *Arrangement of the Principal Parts of a Power Operated Mechanism. The Close Spring is Shown in the Charged Position*

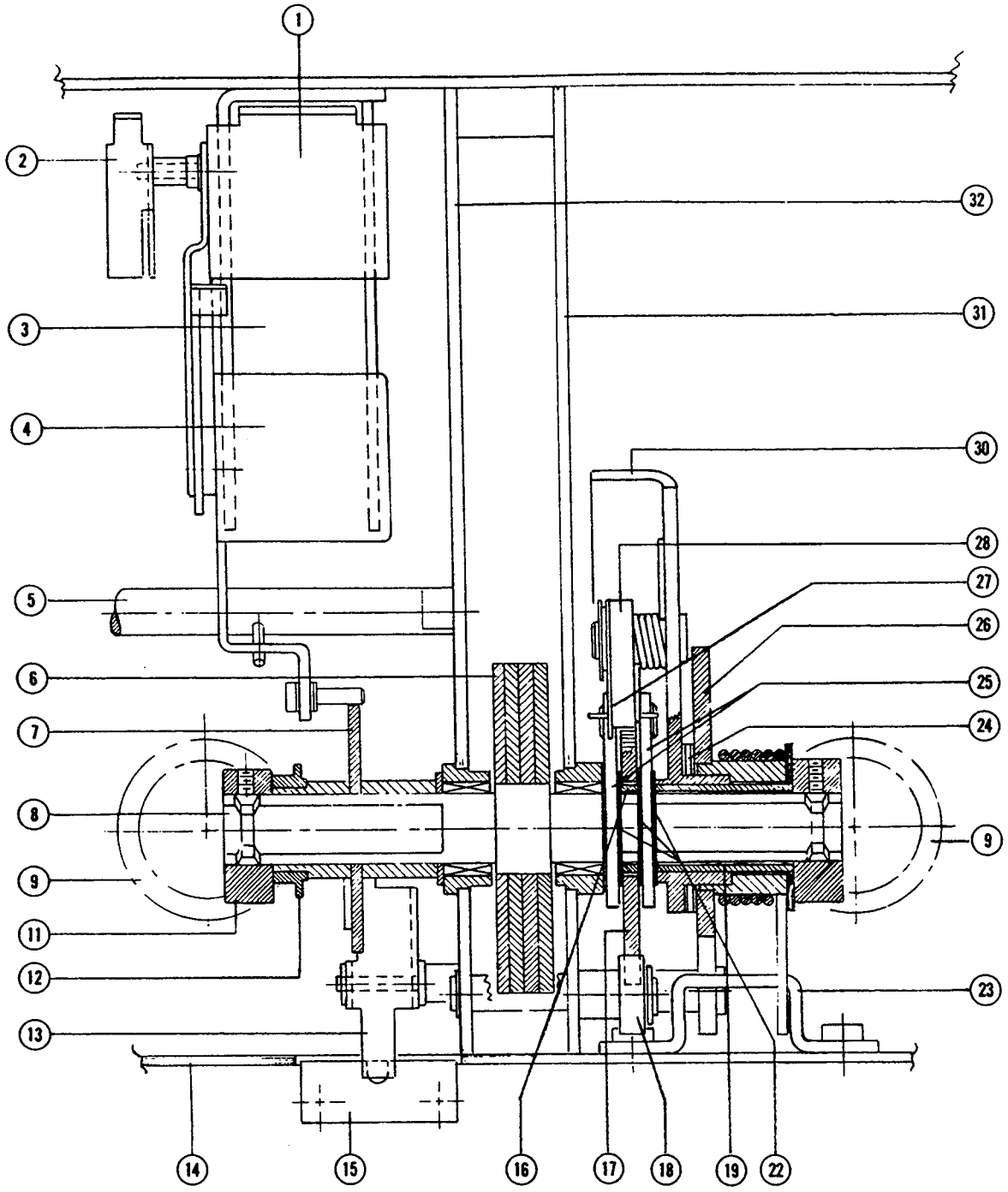

1. Shutter
2. Levering Device Indicator
3. Levering Mechanism
4. Trip Plate
5. Trip Shaft
6. Close Cam
7. Motor Cut-Off Switch Cam
8. Crank Shaft
9. Closing Spring
11. Crank Arm
12. Spring Charge Indicator
13. Motor Cut-Off Switch Lever
14. Draw Out Unit Base
15. Motor Cut-Off Switch
16. Ratchet Bushing
17. Ratchet Wheel
18. Hold Pawl
19. Oscillator Bushing
22. Spacers (3)
23. Stop Bracket
24. Thrust Bearing and Races
25. Drive Plates (2)
26. Emergency Charge Device
27. Pawl Lifter
28. Oscillator Pawl
30. Oscillator
31. Mechanism Side Frame, Right Hand
32. Mechanism Side Frame, Left Hand

Fig. 15 *Front View Showing Major Parts of the Crank Shaft Assembly. Some Parts are Omitted for Clarity*

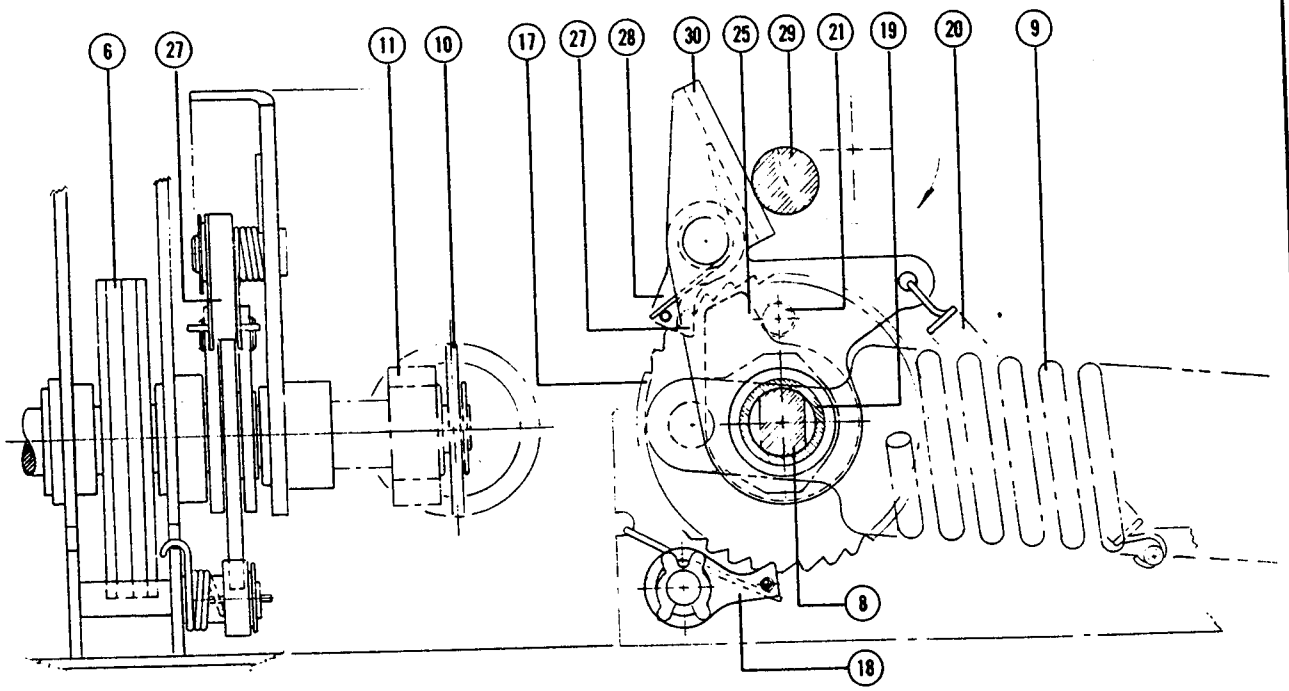

a) Spring Charged

Note: Main cam position for this crank shaft position is shown in Fig. 22a

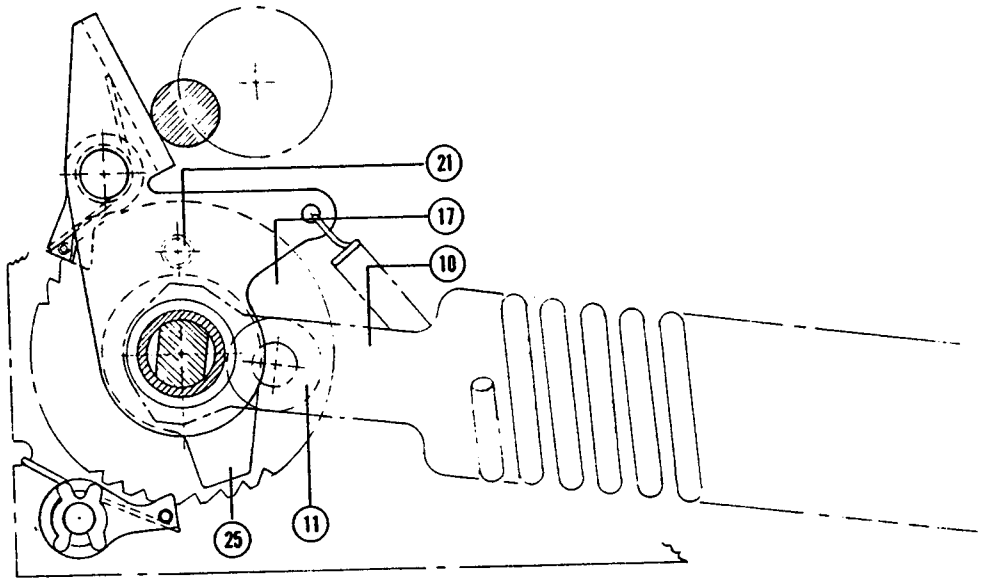

b) Spring Discharged

6. Close Cam
8. Crank Shaft
9. Closing Spring
10. Spring End
11. Crank Arm
17. Ratchet Wheel
18. Hold Pawl
19. Oscillator Bushing
20. Oscillator Spring
21. Ratchet Wheel Pin
25. Drive Plate
27. Pawl Lifter
28. Oscillator Pawl
29. Motor Crank Roller
30. Oscillator

Fig. 16 *Power-Operated Spring-Charge Details*

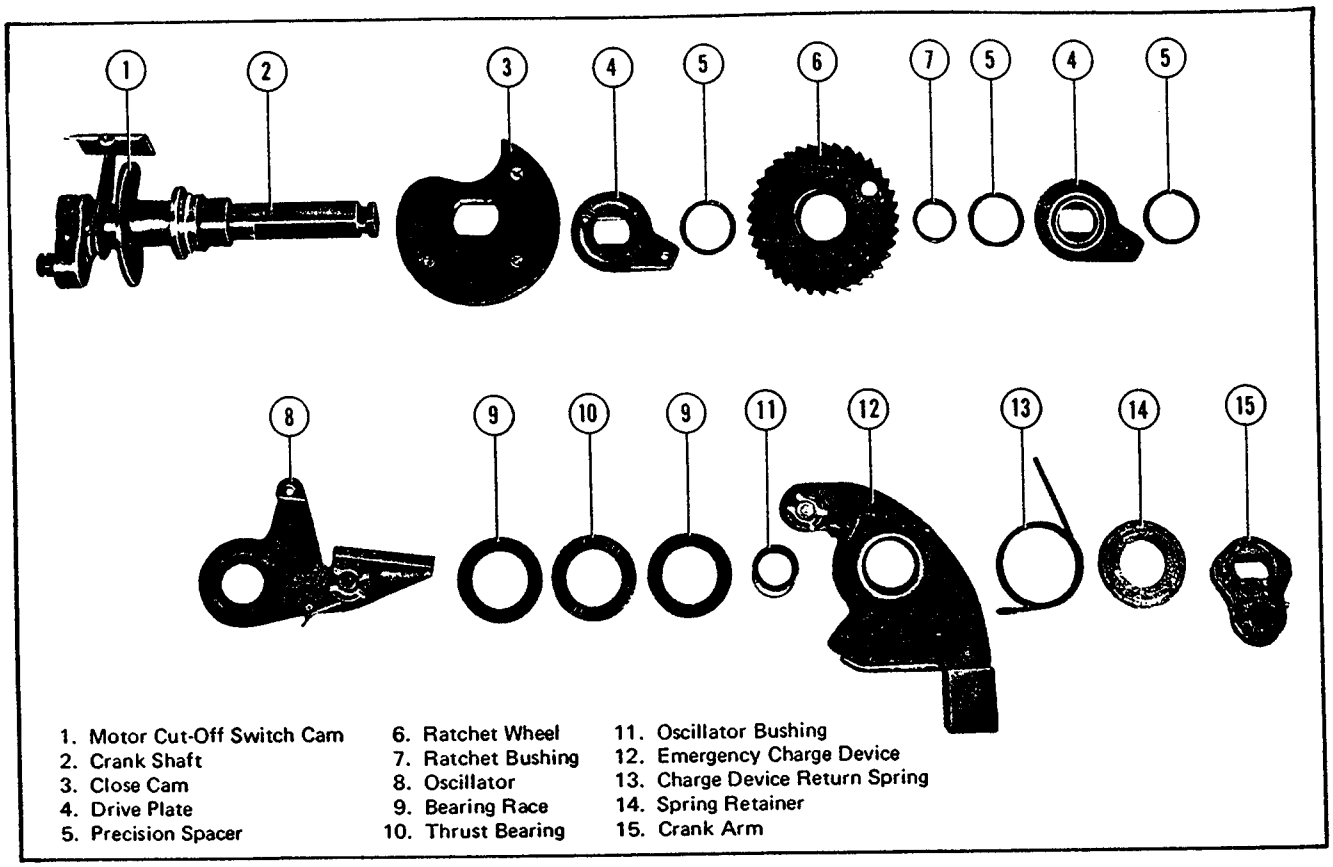

Fig. 17 *Crank Shaft Assembly of Power-Operated Mechanism (385304)*

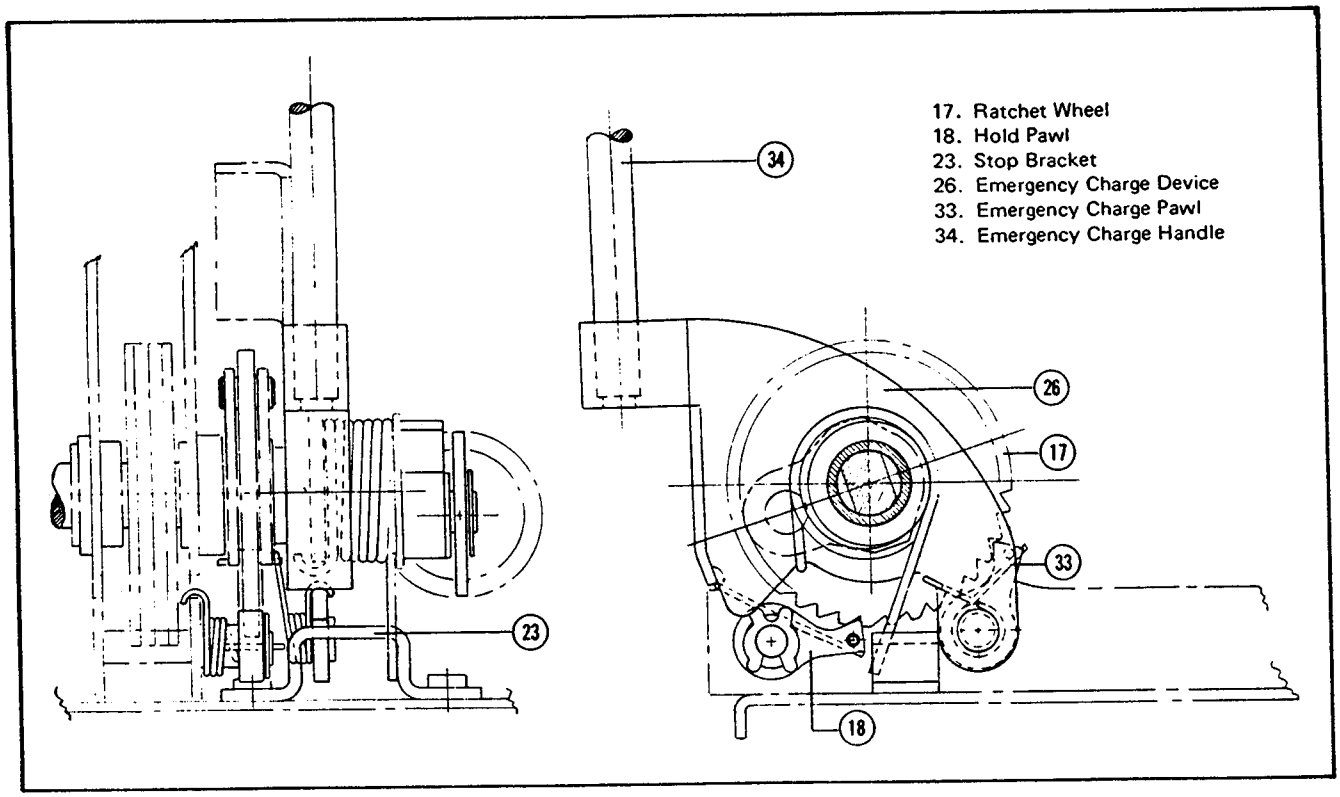

Fig. 18 *Emergency Spring-Charge on Power Operated Mechanism*

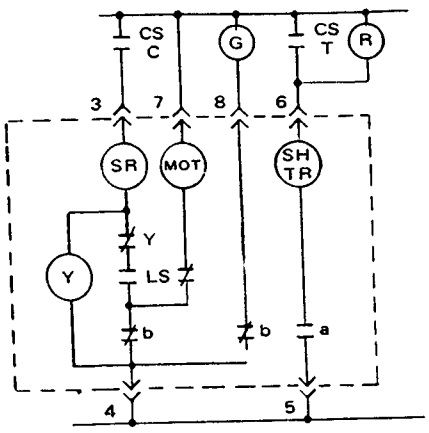

a. Schematic

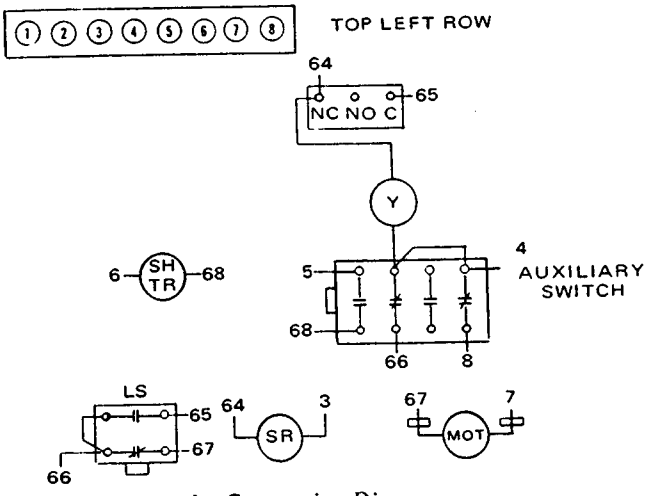

b. Connecting Diagram

MOT - Spring Charging Motor
LS - Limit Switch
SR - Closing Spring Release
SH TR - Shunt Trip
Y - Anti-Pump Relay

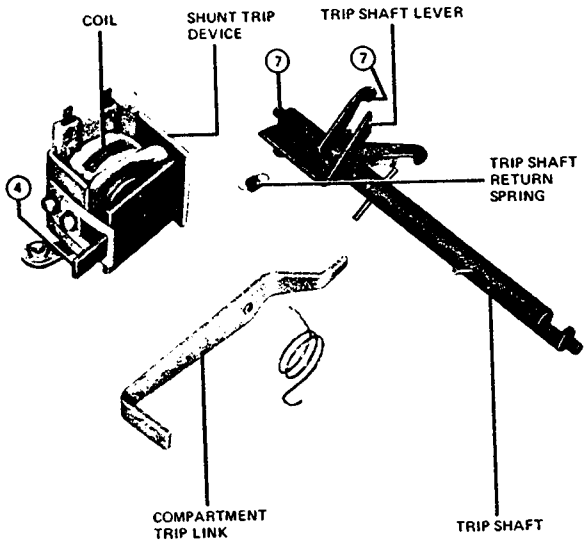

c. Trip Details (391088)

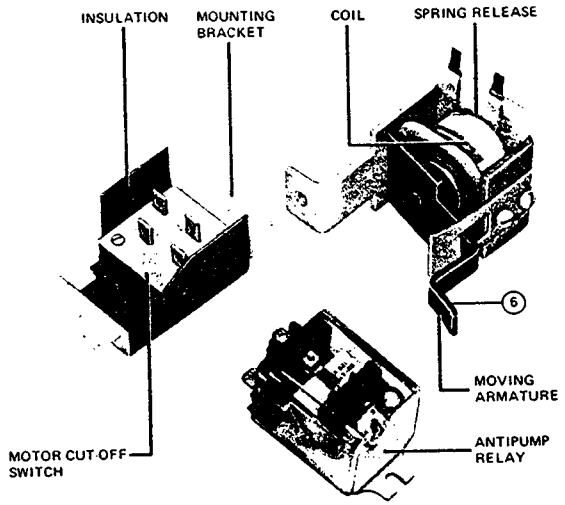

d. Spring Release Details

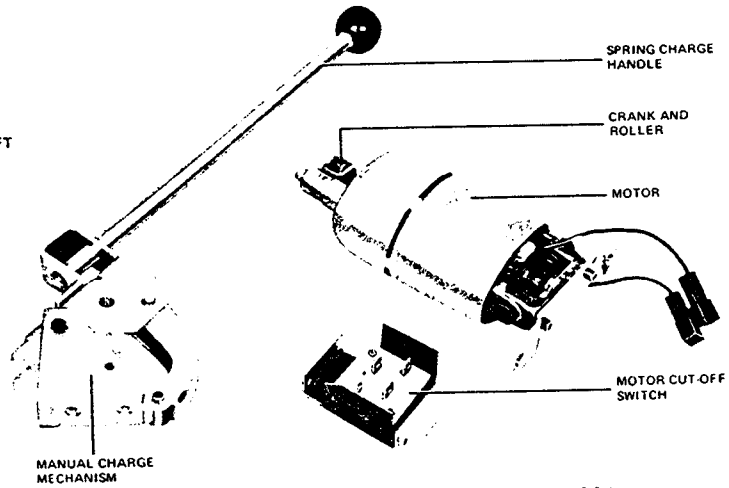

e. Spring Charging Details (391089)

Fig. 19 *Standard Schematic and Connection Diagrams for Power-Operated Breakers and Trip, Spring Release, Spring Charging Details*

2

With the breaker open and springs discharged, the motor is energized through the limit switch (LS) and the b" contact. The green indicating lamp (G) is controlled y a separate "b" contact, and when lit indicates that the reaker is open.

Motor runs and charges the closing springs.

When the springs are fully charged, limit switch (LS) pens in the motor circuit and closes in the spring release oil (SR) circuit.

When the close contact (CS-C) makes, the spring release coil (SR) is energized through the normally closed "Y" contact, the limit switch (LS), and breaker "b" contacts. This releases the latch holding the stop roller on the close cam.

Springs are released to close the breaker. When the breaker closes, the "b" contact opens to cut off spring release coil and motor, and limit switch (LS) contacts reset.

If the close contact (CS-C) is maintained, the "Y" relay will be picked up by the current through the SR coil, and will open its "Y" contact in the SR circuit. This allows only one close operation until the close contact (CS-C) has been reset. The "Y" coil has a very low drop-out voltage.

On some circuit breakers a special closing circuit may be provided which permits the closing springs to be automatically recharged immediately after the breaker is closed instead of only after the breaker is opened. This is accomplished by separating the motor and limit switch

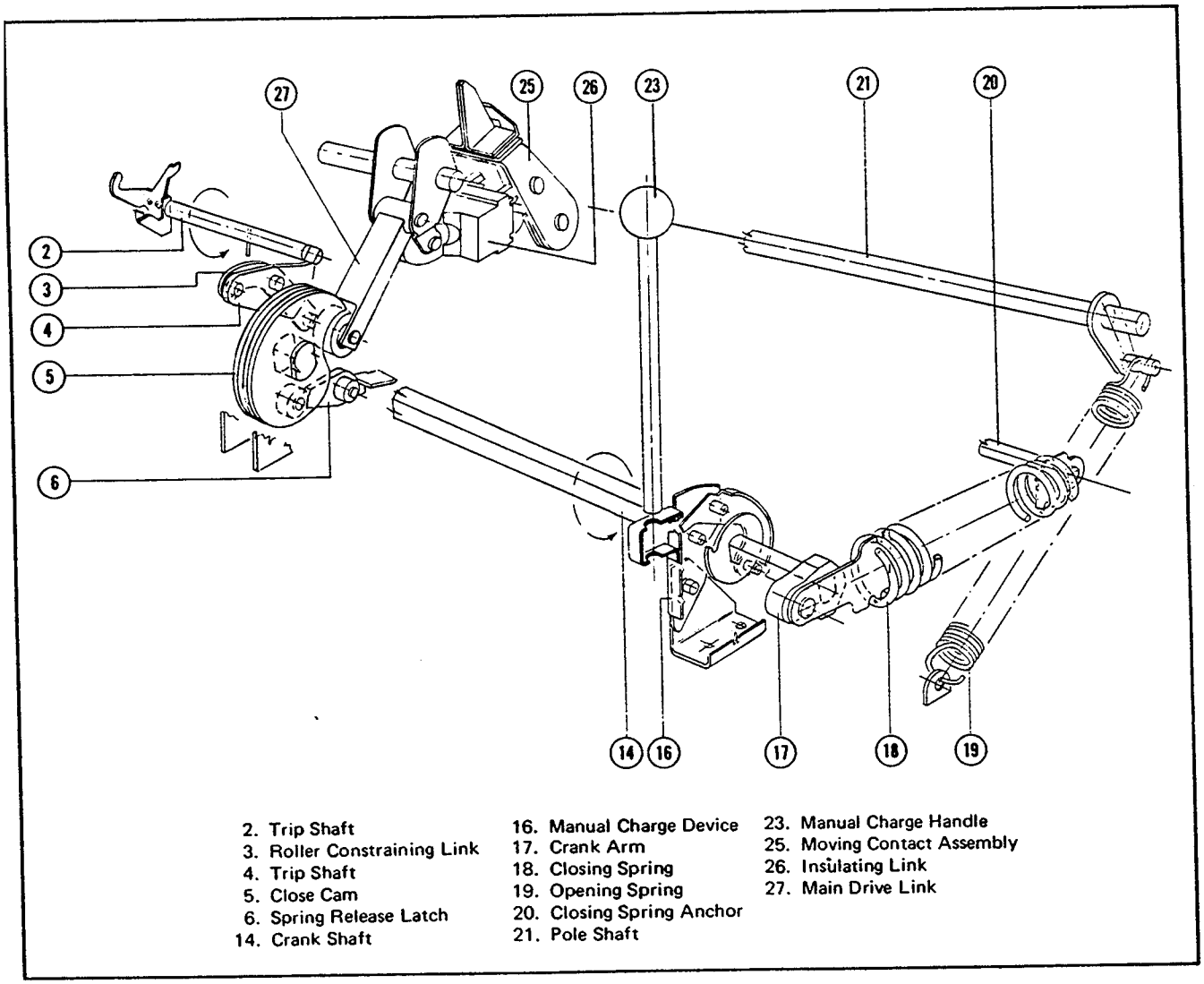

2. Trip Shaft
3. Roller Constraining Link
4. Trip Shaft
5. Close Cam
6. Spring Release Latch
14. Crank Shaft
16. Manual Charge Device
17. Crank Arm
18. Closing Spring
19. Opening Spring
20. Closing Spring Anchor
21. Pole Shaft
23. Manual Charge Handle
25. Moving Contact Assembly
26. Insulating Link
27. Main Drive Link

Fig. 20 *Principal Parts in a Manually Charged Spring Operated Mechanism.*

from the "b" contact so the motor operation is independent of the position of the breaker contacts. This arrangement makes the breaker suitable for use with instantaneous reclosing relays or in special operating sequences.

The standard control utilizes AC or DC control power. For 240 or 120 volt AC equipment, the control power may be taken direct from the source through fuses. For 480 and 600 volt operation, a suitable control power transformer is used. The transformer is optional for 240 volt systems. DC control voltages are 48, 125 or 250.

When the breaker closed, the "a" contact in the shunt trip (SH-TR) coil circuit also closed to complete this trip circuit. The red indicating lamp (R) supervises the shunt trip circuit to show that it is in working order, and indicates that the breaker is closed.

When control power is turned on, any power-operated breaker in the test or connected position with its springs discharged will have its motor energized until the closing springs are charged.

5.1.3 Manual-Operated Mechanisms

On manually operated breakers, the closing spring can be charged only by hand, as described in Section 4.2. As usually equipped, the breaker can be closed only by hand, with the close bar. As an optional extra, a closing spring release device can be supplied on these breakers.

Hand opening of the breaker can be done only by means of the trip plate; however a shunt trip device can be supplied as an optional extra.

5.1.4 Explanation of Spring-Charging Mechanism for Manually-Operated Breakers

Figure 20 is another isometric diagram to illustrate the mechanism in a manually operated breaker. For sake of clarity, the actuator has been omitted.

Figure 21 gives the details of this spring-charging device which is located between the mechanism right hand side frame and the right crank arm. A part of this assembly is the manual charge cam which is rigidly fixed to the crank shaft, the same as the main close cam and crank arms.

The other parts are the front crank assembly which is pivoted to a bracket fastened to the main frame base, and has a socket for the manual charge handle. The rear crank is pivoted to the front portion and has a cross-wise pin on the end. A spring forces this pin against the cam. Another spring holds the front crank assembly in a clockwise direction against a stop, so that the manual spring-charge handle socket is normally upright in the unused position.

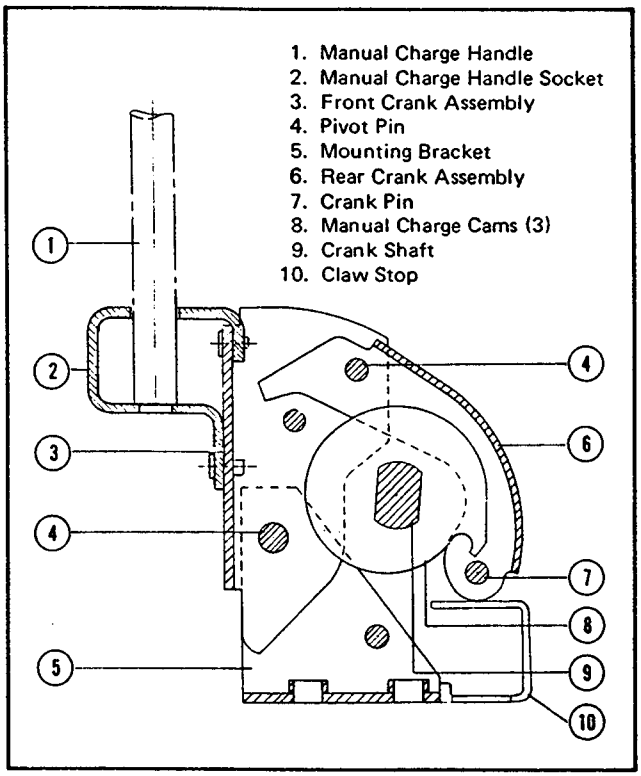

Fig. 21 *Spring-Charging Mechanism on Manual Operated Breakers*

The manual charge cam is mounted on the crank shaft so that the crank pin hooks behind the hook-shaped surface of the manual charge cam as shown, when the handle is upright and the springs discharged. The springs are fully charged by a 90 degree counterclockwise rotation of the handle. The crank spring then returns the assembly to the handle-upright position. In operation this means a single downward stroke from vertical to approximately the horizontal position. As the "Spring charged" position is reached, the handle becomes effortless to turn and the closing spring crank arms snap over center.

It is possible to manually recharge the closing springs immediately after closing the breaker and before it has been tripped open. This results in the springs loading the associated bearings and latches for long periods. Also an extra close operation, or trip-free operation, will be necessary on levering the breaker to the disconnect and remove positions. Therefore, it is recommended that the springs be charged just prior to the closing of the breaker.

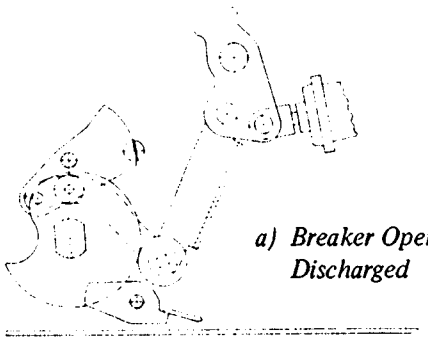

a) Breaker Open Springs Discharged

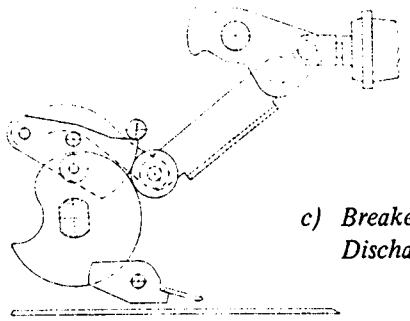

c) Breaker Closed Springs Discharged

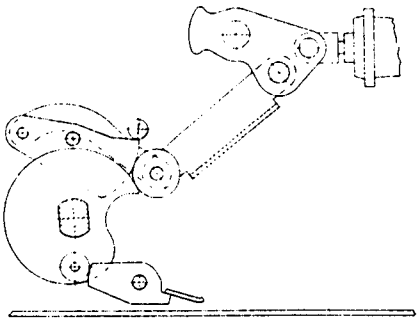

d) Breaker Closed Springs Charged

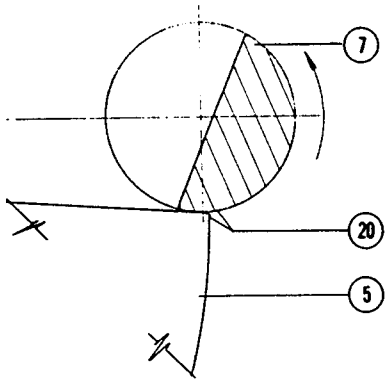

Trip Latch Held

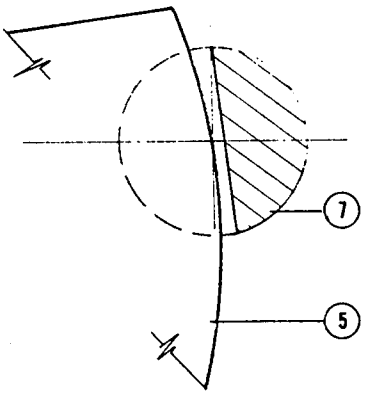

Trip Latch Released

e) Trip Shaft Latch Details

1. Stop Roller
2. Close Cam
3. Roller Constraining Link
4. Pivot Pin
5. Trip Latch
6. Trip Shaft Latching Surface
7. Trip Shaft
8. Pole Shaft
9. Center Pole Lever
10. Pole Lever Pin
11. Moving Contact Arm
12. Stationary Arcing Contact
13. Moving Contact Pivot Pin
14. Main Drive Link
15. Main Roller
16. Spring Release Latch
17. Insulating Link Adjusting Stud and Locknut
18. Insulating Link
19. Mechanism Side Frame
20. Hardened Latch Surfaces

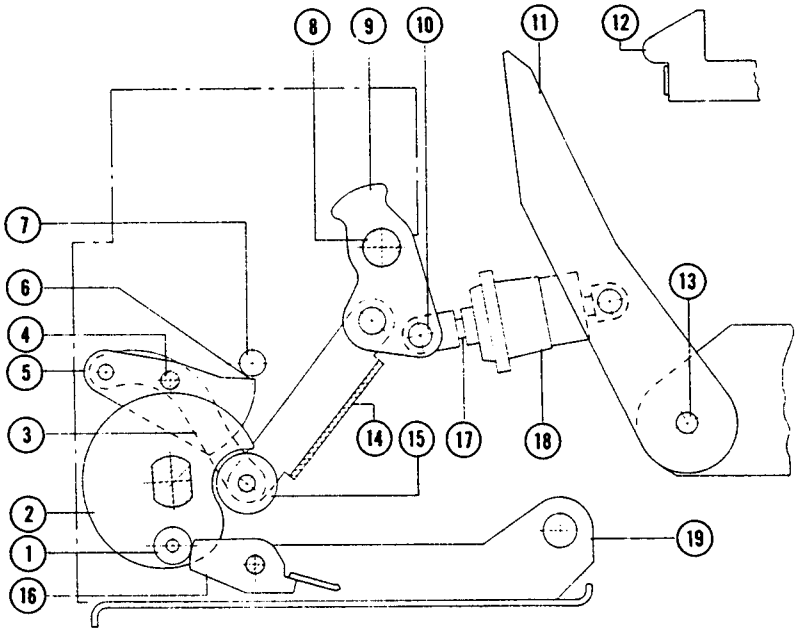

b) Breaker Open - Springs Charged (Spring Charged Position Corresponding To This Closing Cam Position Shown in Fig. 20).

Fig. 22 *These Sketches Show the Four Basic Positions of Breaker and Linkage with Enlarged View of Trip Shaft and Latch*

5.1.5 Circuit Breaker Closing Mechanism

This mechanism is of the general variety of mechanically trip-free mechanisms. This means that the breaker can be opened or tripped free from the closing mechanism at any point in its closing stroke. It also means that if the trip latch is held in the "trip" position while the spring release latch is released, the closing springs will make a trip-free operation but the breaker contacts will not close or move appreciably toward the closed position.

Based on this construction, the breaker close and trip linkage can have four steady state conditions. The arrangements of the basic close and trip linkage for these four conditions are shown in Figures 22a, 22b, 22c, and 22d as follows:

Figure 22a Breaker Open, Springs Discharged, Trip Latch Not Reset.

Figure 22b Breaker Open, Springs Charged, Trip Latch Reset.

Figure 22c Breaker Closed, Springs Discharged.

Figure 22d Breaker Closed, Springs Charged.

The angular position of the close cam in Figure 22a corresponds to the angular position of the drive plates and closing spring crank arms shown in Figure 16b. The trip latch is in the tripped position and it will reset to the latched position at the end of the spring charging stroke. The closing springs are charged by counterclockwise rotation of the ratchet and drive plates until the close cam stop roller meets the spring release latch, as shown in Figure 22b.

Note in Figure 22b also that the lower end of the main drive link, with the main roller, has swung upward and toward the left, pushing the trip latch constraining link so as to rotate the trip latch back to the reset position. This occurs at the same time that the spring charge is complete and just before the close cam stop roller strikes the spring release latch. The position of the cam in Figure 22b corresponds to the position of the drive plates in Figure 16a spring charged, breaker open.

The breaker is now ready to be closed. Closing is started by counterclockwise rotation of the spring release latch. Refer again to Figure 22b. This removes the hold on the close cam stop roller, and allows the force of the closing springs to rotate the close cam counterclockwise

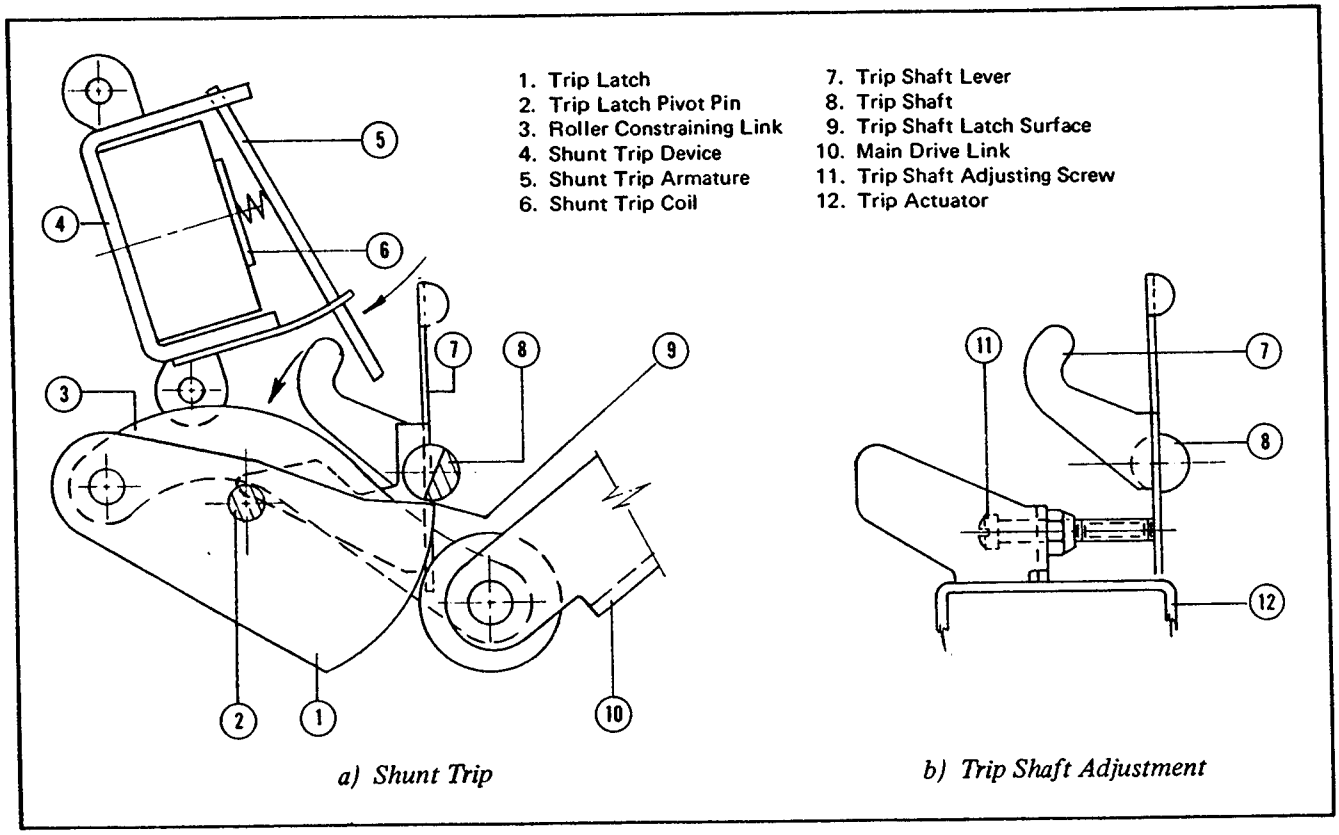

Fig. 23 *Shunt Trip Details Showing Trip Shaft Adjustment*

and close the breaker. The linkage is then in the position shown in Figure 22c. The close cam has rotated about 180 degrees.

The spring release latch can be rotated by two methods:

1. By the spring release device on power-operated breakers, as shown in Figures 14 and 31b.

2. By the close bar, through the linkage shown in Figure 31b.

5.1.6 Circuit Breaker Tripping or Opening Mechanism

Referring to Figure 22c showing the breaker in the closed position, the breaker is tripped open by counterclockwise rotation of the trip shaft. The trip shaft extends across the left hand part of the breaker, from the left hand mechanism side sheet to the left hand breaker side sheet; and can be rotated by several devices as later described.

Rotation of the trip shaft accomplishes breaker opening as follows: Staying with Figure 22c, the main contacts (not shown) produce a clockwise twisting force or torque on the pole shaft. This is transmitted by the center pole lever downward through the main drive link to the main roller. The main drive link at the main roller is connected to the trip latch by the roller constraining link. The downward force on the main drive link results in a pulling force on the roller constraining link. This force tends to rotate the trip latch counterclockwise, but the trip latch is kept from rotating by overlap of the latch surface of the trip shaft. A very small rotation of the trip shaft thus releases the trip latch to rotate counterclockwise to the position shown in Figure 22a. The enlarged views of the trip shaft and trip latch tip in Figure 22e show in detail the rotation of the trip shaft for release of the trip latch. Thus the entire linkage collapses under the force of the main contacts and comes to rest with the breaker open, as in Figure 22a. Note that the trip latch is still in the released position, i.e., not reset.

If the breaker stands open with springs charged as in Figure 22b, and if the trip shaft is held in the rotated or trip position, an attempt to close will result in a trip-free operation. This is so because, with the trip shaft in the trip position, there is no restraint on the trip latch, so no force is applied to the main link to close the breaker.

Although certain interlocking operations may or will result in this trip-free type of operation, it causes some

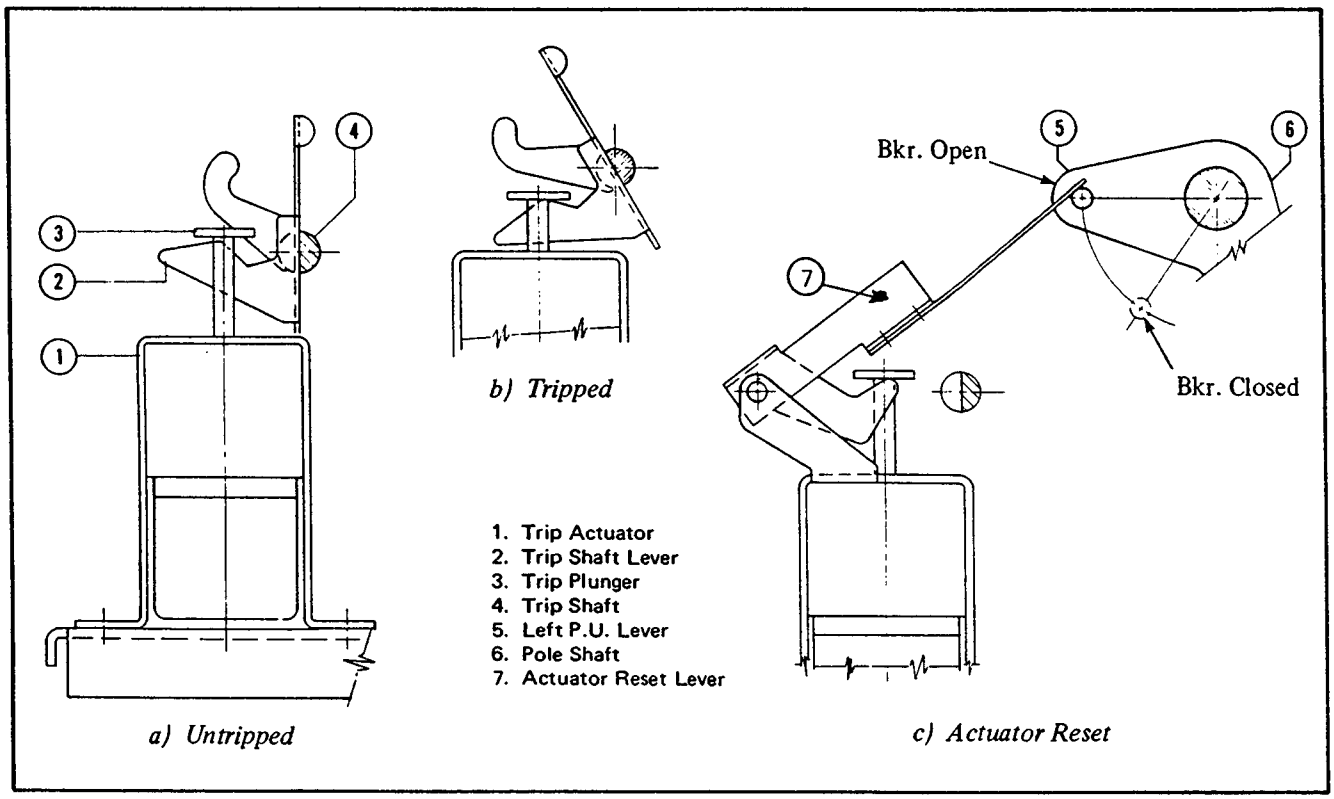

Fig. 24 *Actuator*

extra shock on the mechanism parts. Therefore trip-free operations should be avoided.

The trip shaft can be rotated to trip the breaker in the following ways:

1. By hand push on the trip plate. As shown in Figure 27, this item has a tab which pushes against a pin on the trip shaft which applies a direct rotating force on the shaft in the tripping direction.

2. By shunt trip device, as shown in Figure 23a. The armature of the clapper-type electro magnet pushes on a lever on the trip shaft to rotate it in the tripping direction.

3. By action of the actuator, as shown in Figure 24b. A downward pull by the trip plunger pulls on a lever from the trip shaft to rotate it in the tripping direction.

4. By action of the trip plate on the front of the breaker compartment door (providing the breaker is in the connected position.) A flap on the breaker compartment hinged door, operating through a sliding link and lever fastened to the cradle move the compartment trip lever extending from the bottom of the drawout unit. Refer to Figures 25 and 26.

5. An undervoltage trip device is available as an accessory, and will directly operate the trip shaft. This is shown in Figures 67 & 68, and its operation is covered in Section 8.7.1.

6. Blown Limiter Indicator. See Fig. 80.

5.1.6.1 Miscellaneous Details

Figure 26 shows a bottom view of the breaker drawout unit. Visible in this picture are details as follows:

1. The Interference Interlocks

These are Z-shaped brackets which prevent circuit breakers with insufficient interrupting ratings (or mismatching disconnects) from being inserted into wrong compartments.

This compartment	Will accept these breakers
DS-206	DS-206
DS-206S	DS-206S, DS-416, DS-416S, DS-420
DS-416	DS-416, DS-416S, DS-420
DS-416S	DS-416S, DS-420
DS-420	DS-416S, DS-420
DSL-206	DSL-206
DSL-416	DSL-416

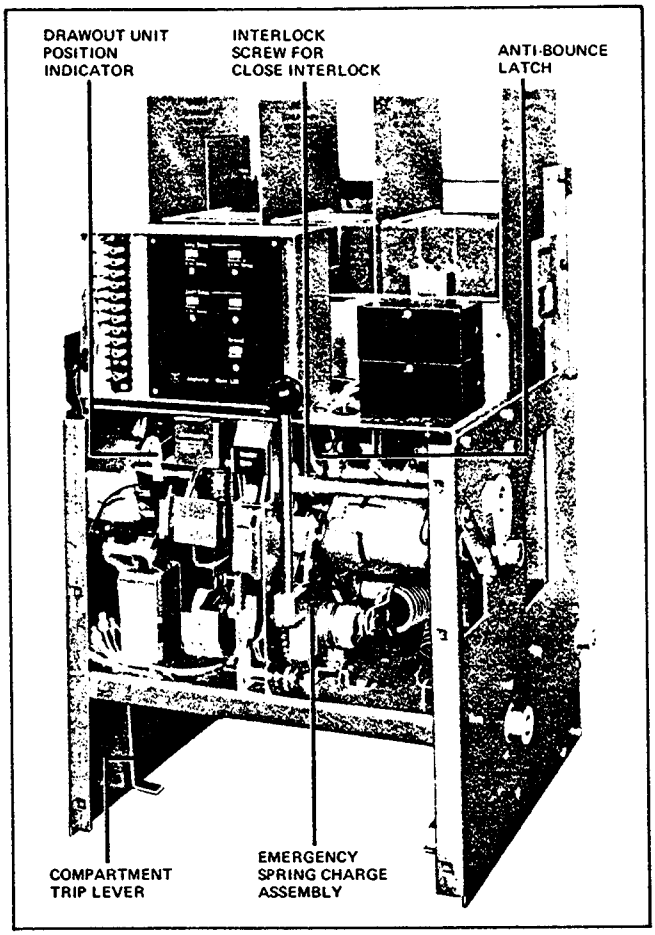

Fig. 25 *DS-632 Breaker with Front Panel Removed (391063)*

2. Ground Contact

This contact engages a corresponding contact on the compartment floor and provides positive grounding of the breaker frame.

3. Motor Cut-Off Switch

On power-operated breakers this switch disconnects the motor when the charging of the closing springs is complete. It is operated by motor cut-off switch lever shown in Figures 13 and 15, which also operates the spring charge indicator.

4. Seismic Positioner

Seismic Positioner increases the rigidity of the breaker to withstand sideways forces due to vibrations on earthquake condition. As shown in Figure 26b, it is mounted on the top rear of the breaker pole unit frame and engages with a spring loaded counterpart in the enclosure.

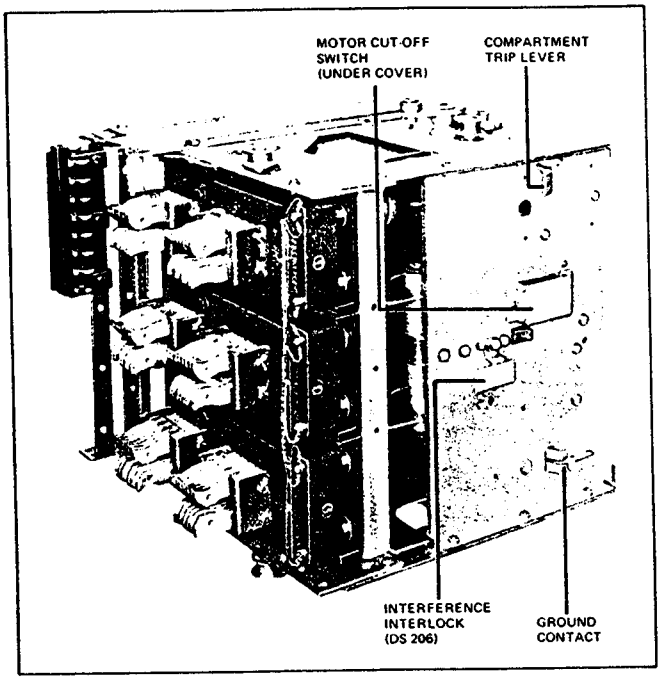

Fig. 26a *Bottom View of Breaker Unit Showing Interference Interlock, Motor Cut-off Switch and Other Details not Visible from Above*

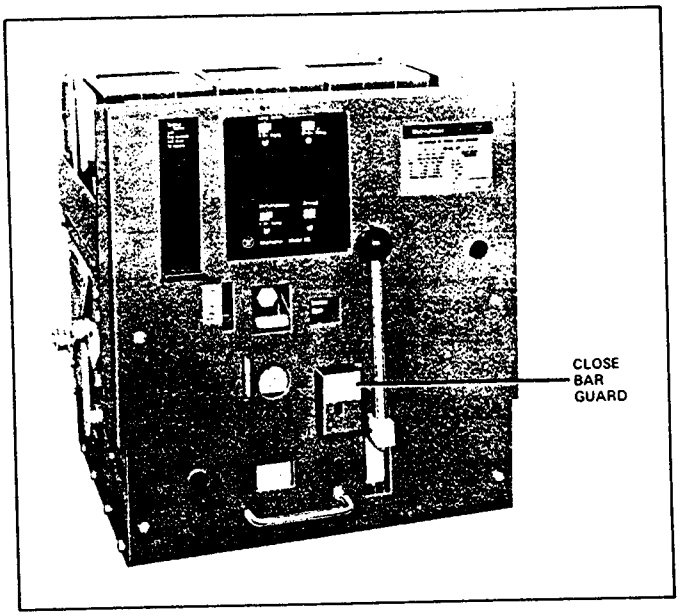

Fig. 26c *Front View Showing Close Bar Guard (391071)*

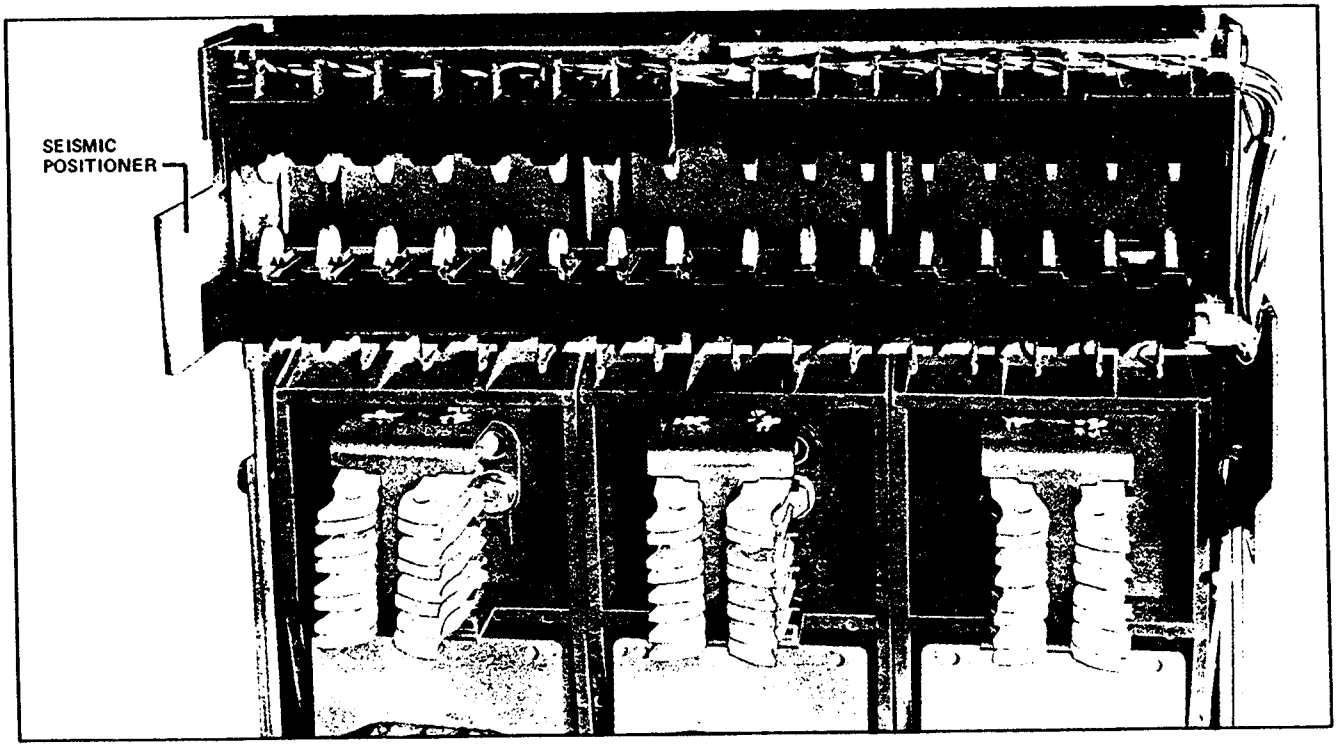

Fig. 26b *Rear View Showing the Seismic Positioner (75010-2)*

5. Close Bar Guard

This covers the close bar to prevent unintentional manual closing of the breaker. It is mounted on the front panel to cover the close bar. In case of emergency, the breaker may be closed by pushing the close bar through a small hole in the cover. See Figure 26c.

6. Operation Counter

Mechanical counter mounted under the top plate below the auxiliary switch provides the record of the number of breaker operations. The counter is connected through linkage to the pole shaft.

5.1.7 Mechanical Interlocking, Description and Explanation of Operation

To increase safety to personnel and the circuits to which the breaker is connected, the complete unit is equipped with automatic mechanical interlocking. This interlocking is effective in various ways in the four breaker positions (Figure 27):

WARNING

DO NOT TAMPER WITH INTERLOCKING, AND IF IS NOT FUNCTIONING, HAVE IT CORRECTED. INTERLOCKING THAT IS FUNCTIONING IMPROPERLY CAN RESULT IN MECHANICAL AND ELECTRICAL DAMAGE TO EQUIPMENT AND BODILY INJURY TO PERSONNEL.

a. The REMOVE position.

b. The DISCONNECT position.

c. The TEST position.

d. The CONNECT position.

In addition there is an interference interlock described in Section 5.1.6.1.

This mechanical interlock system serves basic purposes as follows:

1. In the REMOVE position it prevents the breaker from being closed and prevents the closing springs from being

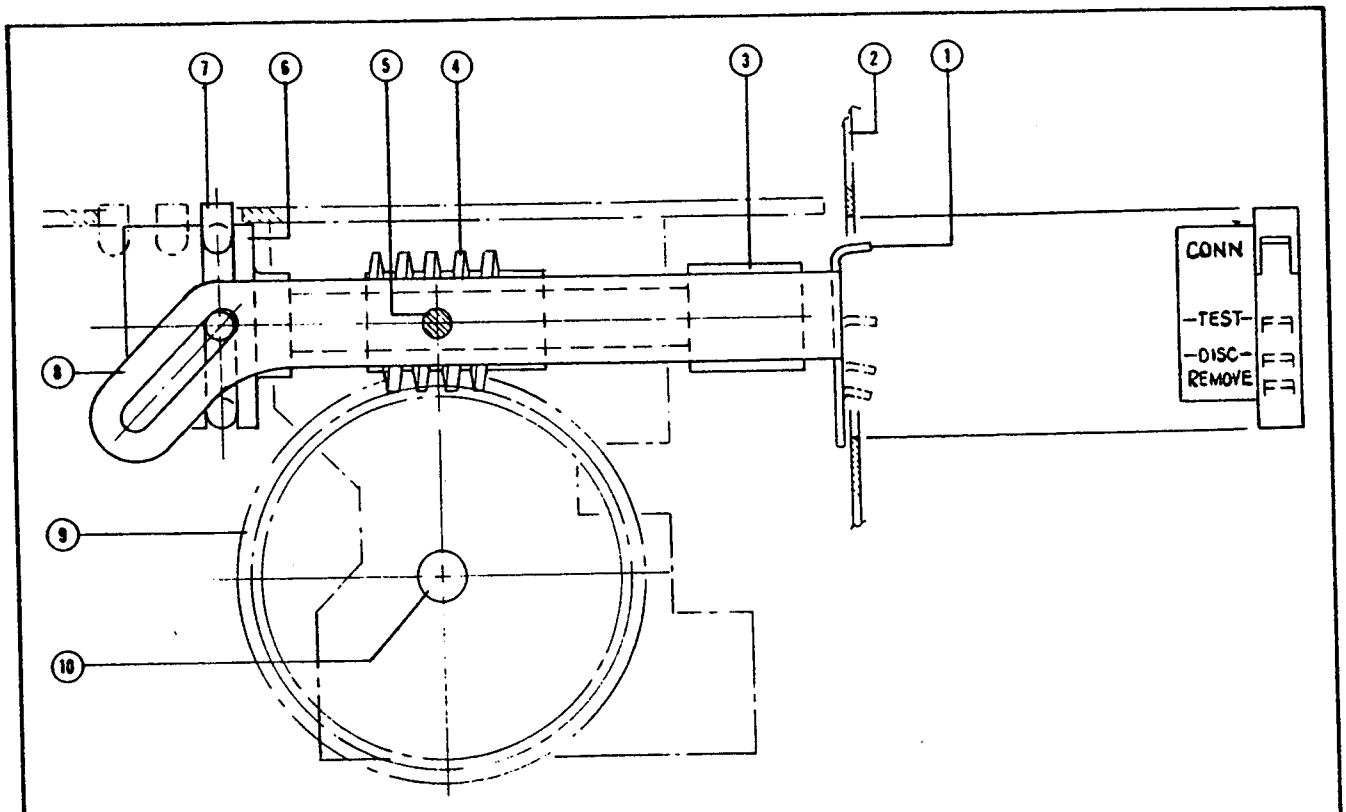

1. Indicator Index Tab
2. Front Panel
3. Levering Worm Shaft
4. Levering Worm
5. Indicator Pivot Pin
6. Traveling Stop Nut
7. Traveling Stop Nut Clamp
8. Indicator Lever
9. Levering Worm Gear
10. Levering Shaft

Fig. 27 *Drawout Unit Position Indicator*

charged or remaining charged. The levering device shutter is held open.

2. In the DISCONNECT position it prevents the breaker from being withdrawn from its compartment.

3. In the TEST position it permits all normal no-load operations of the breaker with the primary disconnect contacts separated.

4. In the CONNECT position it prevents the disconnecting or withdrawal of a closed breaker. This prevents the drawing of dangerous, destructive arcs on the disconnecting contacts if the circuit is loaded.

5. While moving the breaker in either direction between the TEST position and the CONNECT position or the DISCONNECT position; or while standing in any intermediate position, it prevents the closing of the breaker. Therefore it prevents the connecting of the closed breaker to the power circuits. This prevents arcing on the disconnecting contacts as would occur in going into contact with a load on the circuit.

Here are the detailed interlocking conditions which exist in each of the four breaker positions:

5.1.7.1 The REMOVE Position

This is the position of the breaker when nearest the front of its compartment, and is where the breaker must be placed when it is installed after having been completely outside of the compartment.

In this position, the following conditions exist:

A. The breaker is open.

B. The closing springs are discharged. If an attempt is made to charge the springs, a trip-free operation will result.

C. The breaker cannot be closed either electrically or by hand.

D. The breaker can be withdrawn from the compartment by direct pull. (The levering device is not engaged with the cradle.)

E. The levering device arms are in a horizontal position with their rollers pointing toward the rear. See Figure 6.

5.1.7.2 The DISCONNECT Position

In this position the breaker has moved only a fraction of an inch into its compartment and will be shown by the position indicator.

In this position the following conditions exist:

A. The breaker will be held in its compartment as the levering rollers have lowered into the slots in the cradle arms.

B. The shutter will close over the levering device hex shaft.

C. The shutter may be locked closed and the breaker held trip-free by a padlock as described in Section 5.1.8.5, thus locking it in the compartment.

D. Both primary and secondary disconnecting contacts are separated.

E. The breaker is open.

5.1.7.3 The TEST Position

This is the position of the breaker when at a point in between the DISCONNECT position and the CONNECT position, as shown by the draw-out position indicator. In this position the main disconnecting contacts are separated enough to permit safe operation of the breaker. However, the secondary contacts are made up.

In this position the following conditions exist:

A. The breaker must arrive in this position-from either direction with its contacts open. Its closing springs may be either charged or discharged when coming from the connected position.

B. When the levering crank handle is removed, it is possible to close and trip the breaker by hand or electrically.

C. Just before the breaker arrives in the TEST position from the DISCONNECT position, the secondary contacts make up and the spring-charge motor automatically runs and charges the closing springs on power-operated breakers.

D. The breaker can be closed by hand, or electrically, after the springs are charged as in paragraph C above.

E. The breaker can be tripped open by hand, or electrically through the shunt trip device.

F. The trip plate on the hinged compartment door will not trip the breaker.

G. The breaker must be open before further levering can be done.

H. The overload tripping characteristics can be visually checked or changed. Amptector trip devices can be electrically checked and calibrated with a portable test kit. (Accessory equipment)

5.1.7.4 The CONNECT Position

This is the position in which both primary and secondary disconnecting contacts on the breaker are engaged with their stationary counterparts in the compartment.

It is the farthest position from the front of the compartment into which the breaker can be levered, as (1) shown by the drawout position indicator, and (2) when the mechanical stop is felt as a sudden increase in load on the levering crank handle.

NOTE

When levering in from the TEST position, an increase in load on the crank handle will be felt as the main disconnecting contacts are engaged. As cranking is continued, the load will decrease some and then suddenly increase as the final connected position stop is reached.

In this position all of the conditions listed for TEST position also exist, except

IN THIS POSITION, DO NOT ATTEMPT TO ELECTRICALLY CHECK THE AMPTECTOR TRIP DEVICE WITH THE TEST KIT OR BY ANOTHER METHOD BECAUSE BREAKER WILL BE TRIPPED AND CAUSE DISRUPTION OF SERVICE.

The trip plate on the hinged compartment door will be operative, and can be used to trip the breaker when this door is closed.

In addition to the above interlocks, the interference interlock described in Section 5.1.6.1 prevents a breaker of the wrong frame size from being placed in a compartment.

5.1.8 Detailed Explanation of Mechanical Interlock System

That part of the interlock system which prevents closing of the breaker while being driven in either direction by the levering device, or while it is standing in any intermediate position between "TEST" and "CONNECT" or "DISCONNECT", is shown in Figure 28a and b. Figure 28a shows the shutter and trip plate for normal operation, such as in DISCONNECT, TEST, or CONNECT positions. The breaker can be closed and tripped open by all available devices in the latter two positions except the trip plate on the hinged compartment door.

In Figure 28a, the shutter prevents pushing the levering device crank handle onto the worm shaft. If the shutter alone is pushed downward, it will rotate slightly about its pivot pin and its lower projection (See Figure 28a) strikes the hook on the trip plate, and the worm shaft will not be cleared. So it is necessary to push the trip plate in, which moves the hook back out of the way of the shutter lower projection. This permits the shutter to be pushed downward to clear the worm shaft for the levering device crank handle, as shown in Figure 28b.

Note that pushing the trip plate in also pushes the trip shaft pin so as to rotate the trip shaft counterclockwise, thus tripping the breaker open. If closing is attempted with the linkage as in Figure 28b, a trip free operation will be made.

Movement of the shutter also is controlled by the interlock cam, mounted on the levering device shaft to the left of the worm gear. The interlock cam has a fixed relation to the levering device arms. Figure 29a, b, c, and d show the relation between the shutter, interlock cam and levering device arms for the four basic positions of the drawout unit in the compartment.

Figure 29a shows the CONNECT position. The cam is in a position to allow free travel of the shutter interlock pin.

Therefore the shutter can be pushed downward, but only after pushing in the trip plate as in Figure 28. This trips the breaker and therefore prevents levering out with the breaker closed.

Figure 29b shows the TEST position. Note that between CONNECT and TEST positions the cam will rotate so as to block the shutter interlock pin. This prevents the shutter returning to its closed position and releasing the trip plate if the levering device crank handle is removed. Thus, if a closing operation is tried during this part of the travel, a trip-free operation occurs and the breaker contacts do not close. Note that this is true for either direction of breaker travel so that no load is made or broken at the disconnecting contacts.

When the breaker gets to the TEST position, a slot in the interlock cam allows free movement of the shutter interlock pin, and the shutter returns to closed position when the crank is removed. The levering device arms are almost vertically downward.

Figure 29c shows the DISCONNECT position. Here also the cam rotates so as to block the shutter interlock pin while the breaker is between positions thus holding the shutter open. When the exact position, as shown on the indicator, is reached, the shutter will close when the

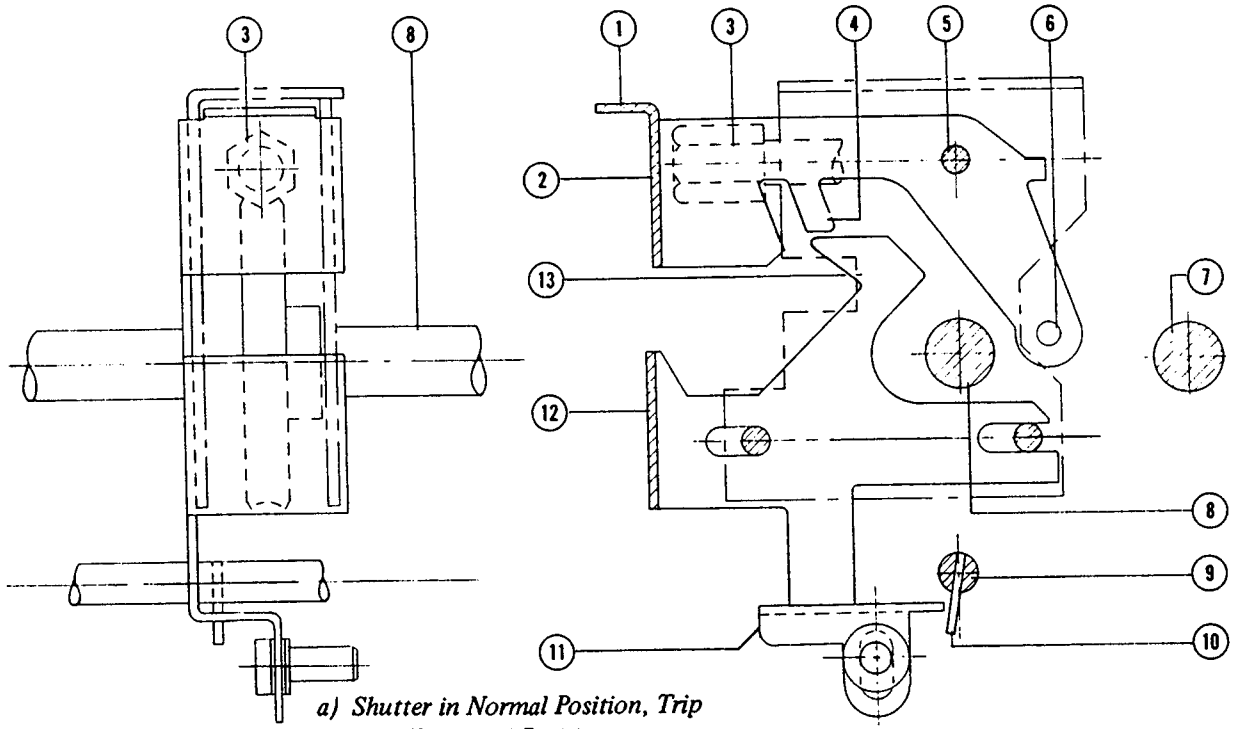

a) Shutter in Normal Position, Trip Plate in Untripped Position

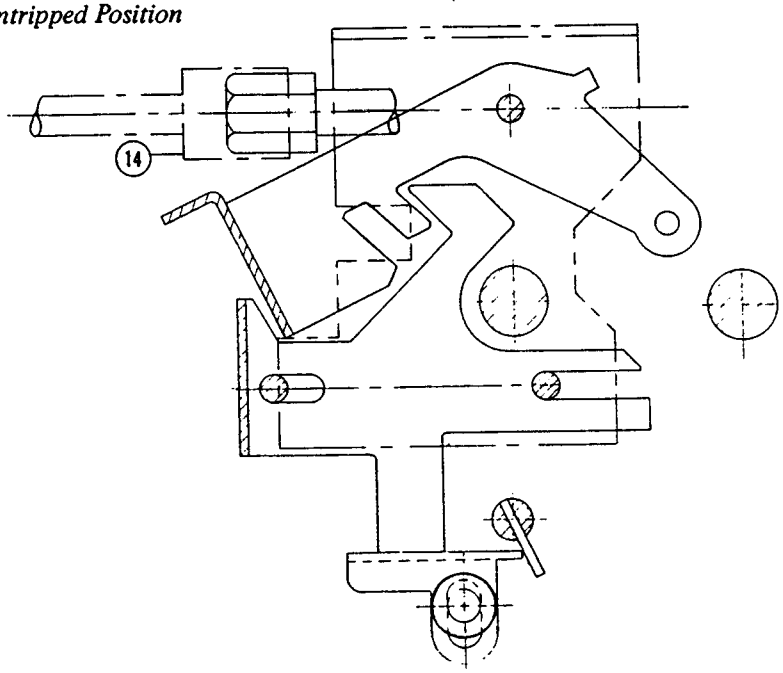

1. Shutter Push Tab
2. Shutter
3. Levering Device Worm Shaft
4. Shutter Lower Projection
5. Shutter Pivot Pin
6. Shutter Interlock Pin
7. Pole Shaft
8. Levering Device Shaft
9. Trip Shaft
10. Trip Shaft Pin
11. Tripping Tab
12. Trip Plate
13. Trip Plate Hook
14. Levering Device Crank Handle

b) Shutter Down, Trip Plate Held in Tripped Position

Fig. 28 *Relation of Shutter, Trip Plate, and Trip Shaft*

crank is removed. The levering arms will be approximately 40^{0} below the horizontal.

Figure 29d shows the REMOVE position. Here the interlock cam stops with the shutter interlock pin blocked. Thus the shutter stays down and the breaker stays tripped when the crank handle is removed. The breaker is held trip-free, so it cannot be closed. Also, by another interlock described later, the close-release latch cannot be released.

5.1.8.1 Spring Discharge Interlock

1. The purpose of this interlock is to operate the close-release latch as the breaker is moved out beyond TEST position. This causes a trip-free operation of the closing mechanism because it occurs while the levering device crank handle is necessarily still on the worm shaft, and the closing springs are charged if the breaker is electrically operated. This is because the crank handle is still being used to move the breaker in the final part of its travel to the DISCONNECT position. Thus, the trip plate is still pushed in and consequently the breaker is trip free.

2. Figure 30a, b, c and d shows the essential parts of the spring discharge interlock. a and b show the levering device in the REMOVE position. The Interlock Plate has two horizontal pins 7 and 8 extending from it, as shown in a, b, c and d. The upper one is designated arbitrarily as Pin A and is darkened to distinguish it from Pin B. In

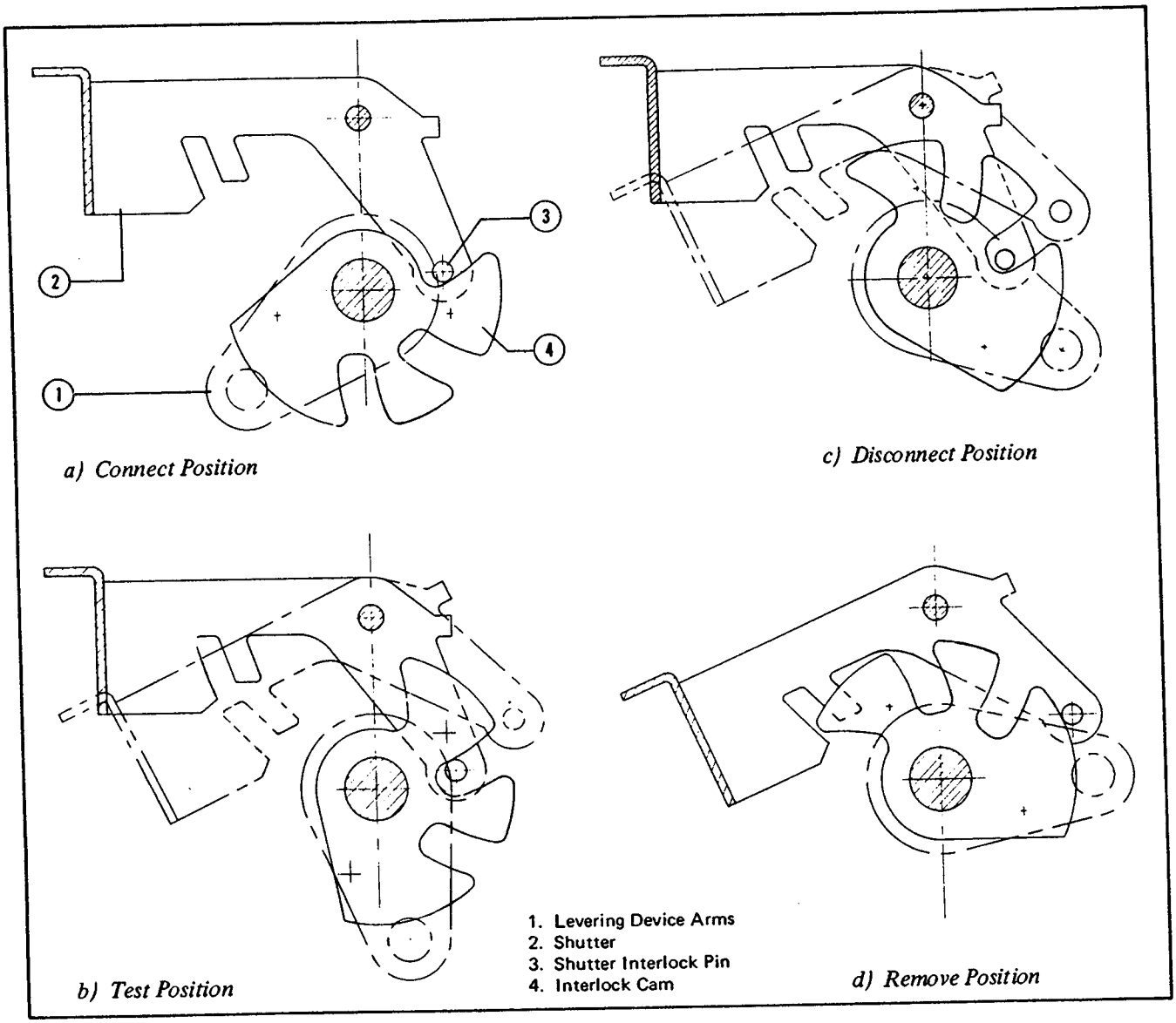

Fig. 29 *Relation of Shutter, Interlock Cam and Levering Device Arms*

levering the breaker out to the REMOVE position as shown in a and b the levering shaft has turned counterclockwise until the levering device arms are horizontal to the rear. As it rotates, the close bar cam has been rotated counterclockwise by Pin B, to the CLOSE position. This releases the spring release latch through the linkage shown in Figure 30, which results in a trip-free operation of the breaker if the closing springs are charged. This happens

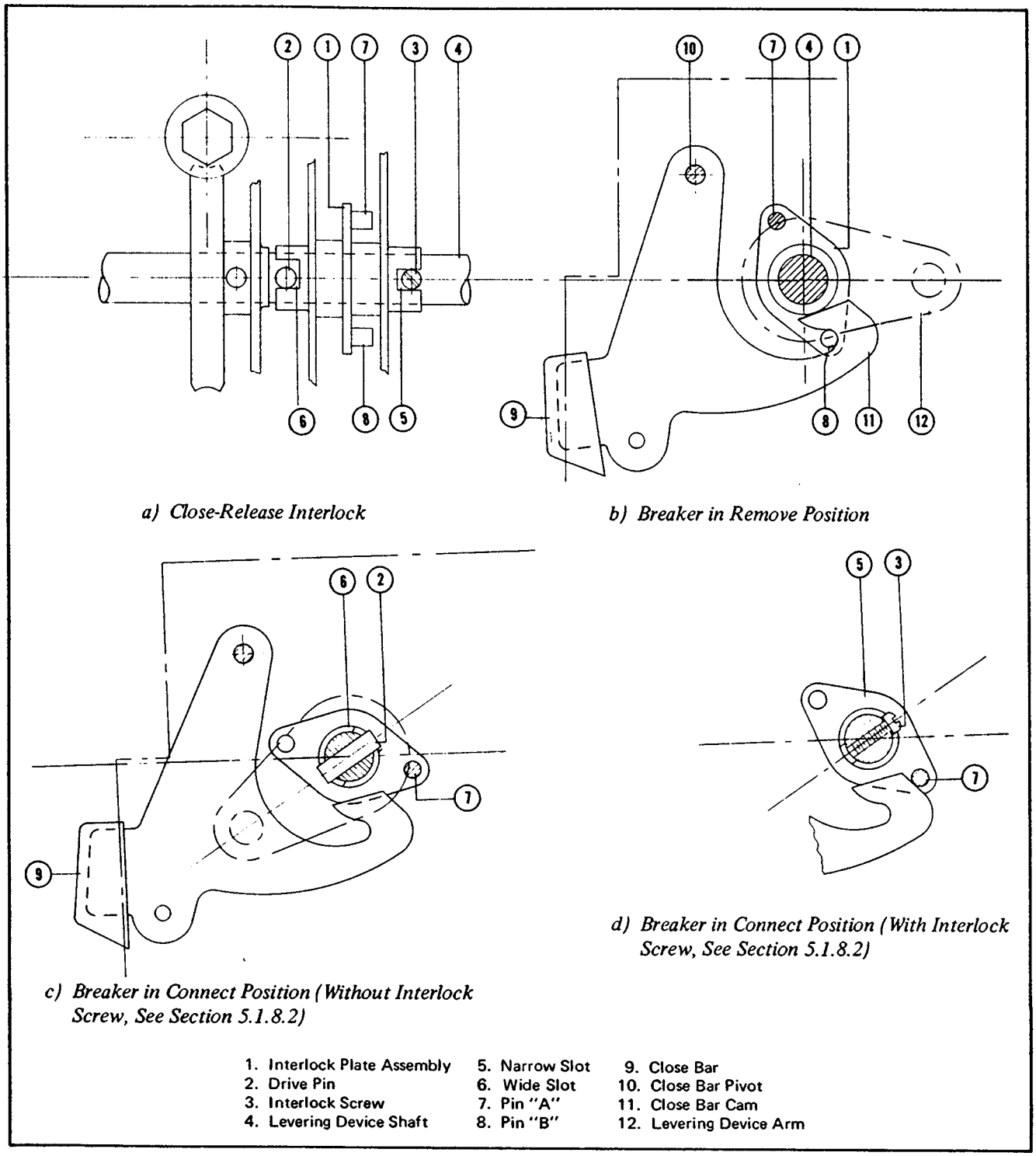

a) Close-Release Interlock

b) Breaker in Remove Position

c) Breaker in Connect Position (Without Interlock Screw, See Section 5.1.8.2)

d) Breaker in Connect Position (With Interlock Screw, See Section 5.1.8.2)

1. Interlock Plate Assembly
2. Drive Pin
3. Interlock Screw
4. Levering Device Shaft
5. Narrow Slot
6. Wide Slot
7. Pin "A"
8. Pin "B"
9. Close Bar
10. Close Bar Pivot
11. Close Bar Cam
12. Levering Device Arm

Fig. 30 *Close-Release Interlock to Discharge Springs on Levering Out of Compartment and Conn. Position no Manual Close Interlock*

because the levering device crank has the Trip plate held in the Trip Position. If the breaker is manually operated, levering out can be stopped at the TEST position. Remove the levering device crank handle and (1) Close the breaker and (2) Trip the breaker. This will discharge the springs so that, when the REMOVE position is reached, there will not be a trip-free operation. The Close bar will merely be pulled into the "CLOSE" position.

5.1.8.2 Connected Breaker Manual Close Interlock

The purpose of this Interlock is to make possible a choice between being able to close the breaker by hand-push on the Close bar and not being able to, with the breaker in the CONNECT position. Some consider it undesirable to do so. Referring to Figure 30a, the Interlock Plate Assembly is keyed loosely to the levering device shaft by a drive pin as shown. If the interlock screw is omitted, the interlock plate can be rotated freely on the shaft about 10 degrees. This is because the "wide" slot is considerably wider than the drive pin. If the interlock screw is in place in the "narrow" slot, the Interlock Plate has practically no play and is forced to rotate exactly as much as the levering device shaft rotates.

Figure 30c shows the standard arrangement, without the interlock screw, with the levering device arms in the CONNECT position. Note that there is a clearance between the back of the hook and Pin A. This permits the close bar to be pushed to the "close" position and close the breaker.

In Figure 30d, all parts are in the same position as in Figure 30c, except that the interlock screw has been placed in the "narrow slot". This arrangement is shown in Figure 25. This forces the interlock plate to rotate about

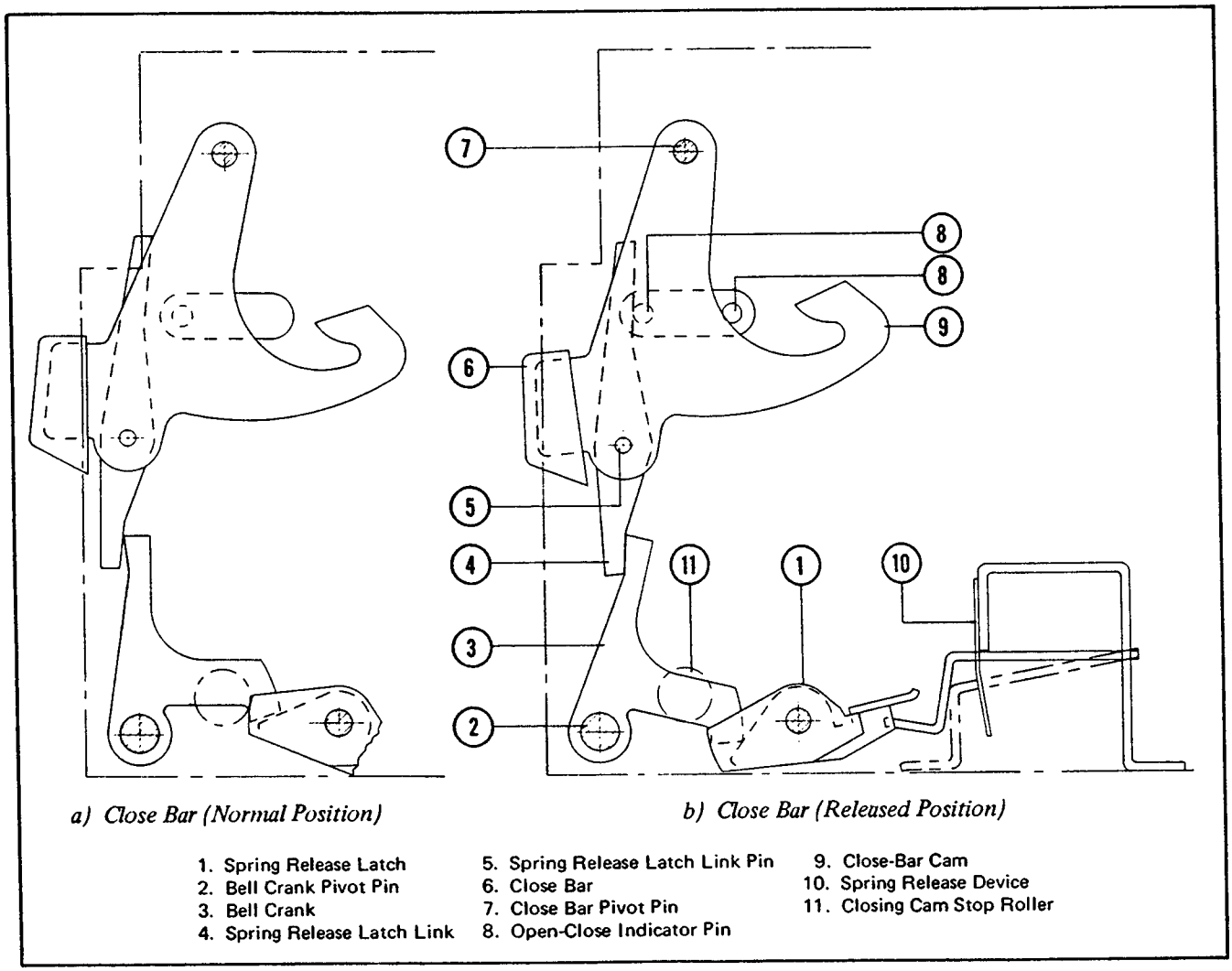

Fig. 31 *Close Interlock to Prevent Efforts to Close a Breaker that is Already Closed*

10 degrees further than in Figure 30c, so that there is almost no clearance between Pin A and the back of the hook. Consequently the Close bar cannot be pushed to the "Close" position. However, the breaker can be remote-closed by applying control voltage to the spring release coil through a control switch or other circuit-making device.

5.1.8.3 Breaker Equipped for Electric Lockout

Power operated breakers may be equipped for electric lockout, meaning that closing an unenergized circuit is prevented. This may be the main circuit or any other desired circuit. This is accomplished by making it impossible to release the spring release latch by the spring release device unless the monitored circuit is energized. The spring release coil (SR) is wired through the contact on the motor cut-off switch that closes as the closing springs become fully charged. The remainder of the circuit is through a front panel closing pushbutton switch and to the terminals of the circuit being monitored. Thus, when the monitored circuit is energized properly, the breaker may be closed through the panel pushbutton switch, provided in addition that the closing springs are charged.

As an additional safeguard against undesired closing under this electric lockout condition, all such breakers will be equipped with the interlock screw as described in Section 5.1.8.2 above. This prevents hand closing of the breaker in the CONNECT position.

Manually operated breakers may also be furnished with this feature if they are equipped with optional electrical spring release devices.

5.1.8.4 Closed Breaker Interlock

Figure 31 shows how operation of the spring release latch is prevented when the breaker already is in the closed position. The Close Bar is connected to the spring release latch by a link and bell crank. The link is pivoted on the lower end of the close bar cam by a pin as shown. As the Close Bar is pushed, the pin and latch link will move to the right, along with the lower end of the cam. The lower end of the link is facing a knife edge pivot on the vertical arm of the bell crank. The upper end of the link is facing the Open-Close Indicator Pin. This pin is at the left end of its slot in the mechanism side frame with the breaker open and at the right end with the breaker closed. As the Close Bar is pushed, the link therefore has two possible end pivots. If the breaker is open the upper end of the link will swing to the right until it touches the indicator pin. The lower end of the link will then swing to the right and push the vertical arm of the bell crank to the right. The horizontal arm of the bell crank moves downward and presses directly on the spring release latch, allowing the breaker to close.

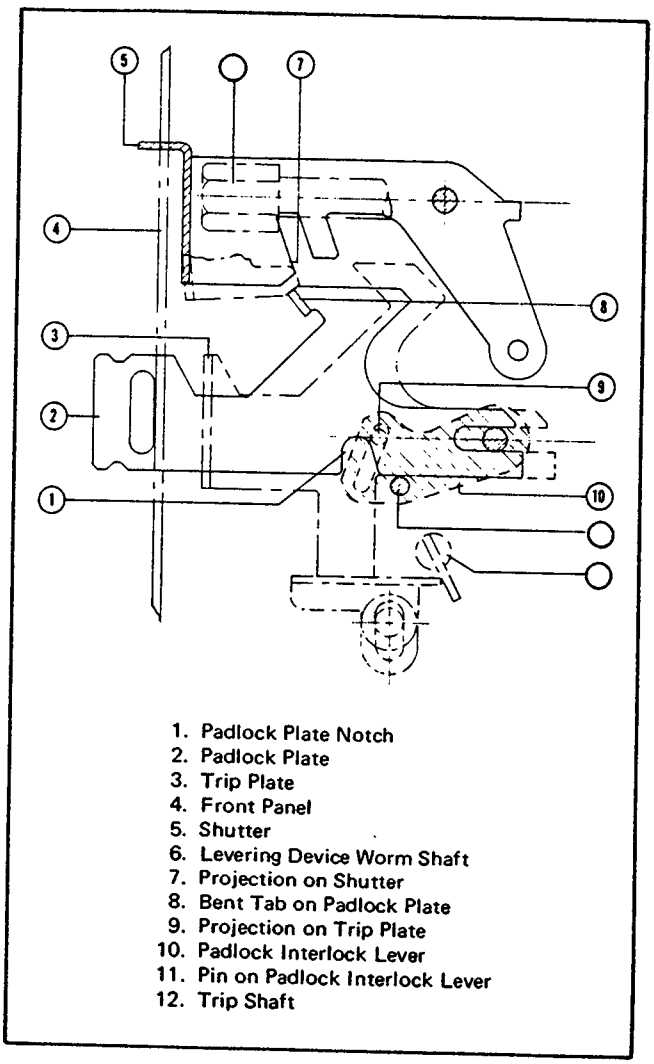

Fig. 32 *Padlock Device - Locked Trip Free and Shutter Raised*

If the breaker already is closed and the Close Bar is pushed, the upper end of the spring release latch link will swing free to the right because the indicator pin is not there to stop it. Consequently, no force is applied to the vertical arm of the bell crank, and nothing else happens.

5.1.8.5 Padlocking Provision

Figure 32 shows the essential parts of the padlock interlock. The breaker is padlocked in the trip-free

condition in which the breaker cannot be closed and the breaker cannot be moved with the levering device. This figure shows the relation of parts for padlocking in the trip-free, shutter up condition. There are three major parts involved, which are interleaved and assembled on the left hand side of the levering device assembly:

1. The Shutter

2. The Trip Plate

3. The Padlock Interlock Lever

The Padlock Interlock lever is located between the Trip Plate and the Padlock Plate, and is pivoted on a fixed center toward the rear of the breaker. The front part of this lever has a sloping slot into which a projection from the trip plate extends. Horizontal movement of the trip plate by cam action of the projection against the walls of the slot, causes the front of the interlock lever to move up or down. The interlock lever is pushed upward by a spring. This lever also has a short pin extending outward normally into a curved notch in the bottom edge of the padlock plate.

To padlock the breaker, with shutter closed, push the trip plate in. Pull the padlock plate forward. This exposes the padlock slot in the padlock plate. Insert the padlock and lock.

Movement of the trip plate pushes the front end of the padlock interlock lever down, moving its pin downward and out of the notch in the padlock plate. Forward movement of the padlock plate and backward movement of the trip plate places the pin in the padlock interlock lever behind the notch in the padlock plate. With the padlock plate held forward, the padlock interlock lever cannot move. The projection from the trip plate is consequently held in the slot in the padlock interlock lever, so the breaker remains locked in the trip-free condition until the padlock is removed and the members are returned to their normal positions by their return springs. While so locked, the shutter is prevented from downward travel by a horizontal projection striking a bent-over tab on the padlock plate.

Section 6 - Circuit Breaker Pole Units, Description and Operation

6.0 GENERAL

Figures 33, 34, 35, and 36 show detailed three pole assemblies of all of the type DS circuit breakers.

DS206 has the three poles mounted on a single molded base of high strength insulating material, with the contact parts and sensors mounted on it. Figures 37 and 38 show front and rear views of the assembly.

The DS416, DS420, DS632 and DS840 differ in that each of the three poles are mounted on individual insulating bases, and all three poles held in accurate alignment by a welded steel frame. Front and rear views of each are shown in Figures 39 and 40 for the DS416, Figures 41 and 42 for the DS420, Figures 43 and 44 for the DS632, Figures 45 and 46 for the DS840.

6.1 MOVING CONTACT SUB-ASSEMBLIES

The moving contact members of all ratings consist of blades hinged at the bottom to the lower main terminal

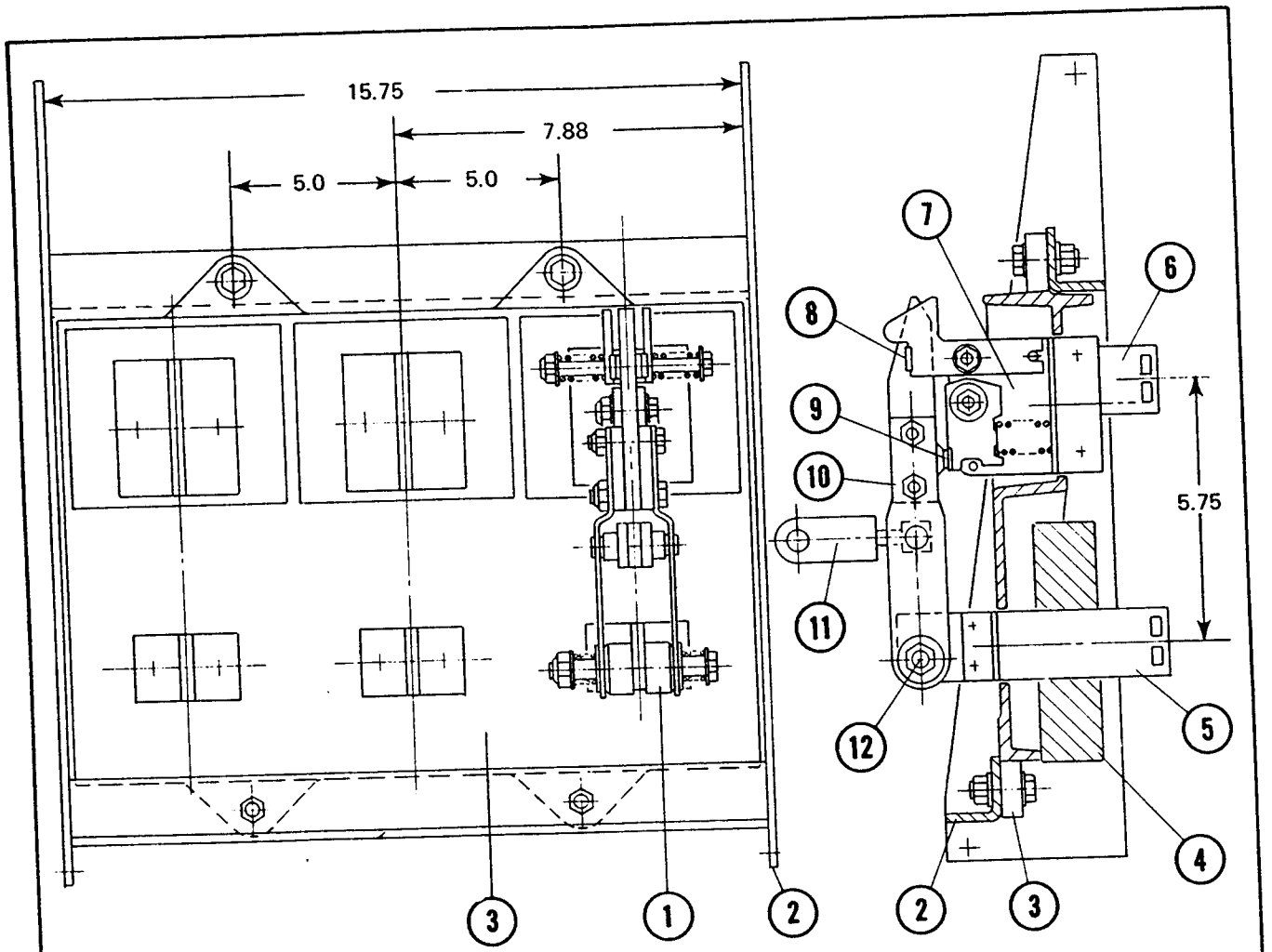

Fig. 33 *Three-Pole Assembly of DS-206 Pole Units on Frame*

through controlled pressure rotating contacts and with main and arcing contacts at the upper end. The arcing contacts of all of the five ratings shown are essentially the same design. The number of blades, the size of the main terminals and the number of fingers in the main disconnecting contacts vary with the rating. The DS206 has two moving blades, the DS416 and DS420, four moving blades, and the DS632 and DS840, eight moving blades. On the DS206, two butt type main contacts and a knife blade arcing contact are located between the two hinged blades. On the DS416 and DS420 the main contact member, i.e. which makes actual contact with the stationary contacts, is a horizontal member to which all blades are connected. On the DS632 and DS840 there are two sets of contacting surfaces, one vertically above the other, for making contact with two corresponding rows of stationary contact fingers. The arcing contact assembly is bolted to the top of the main moving contact blade

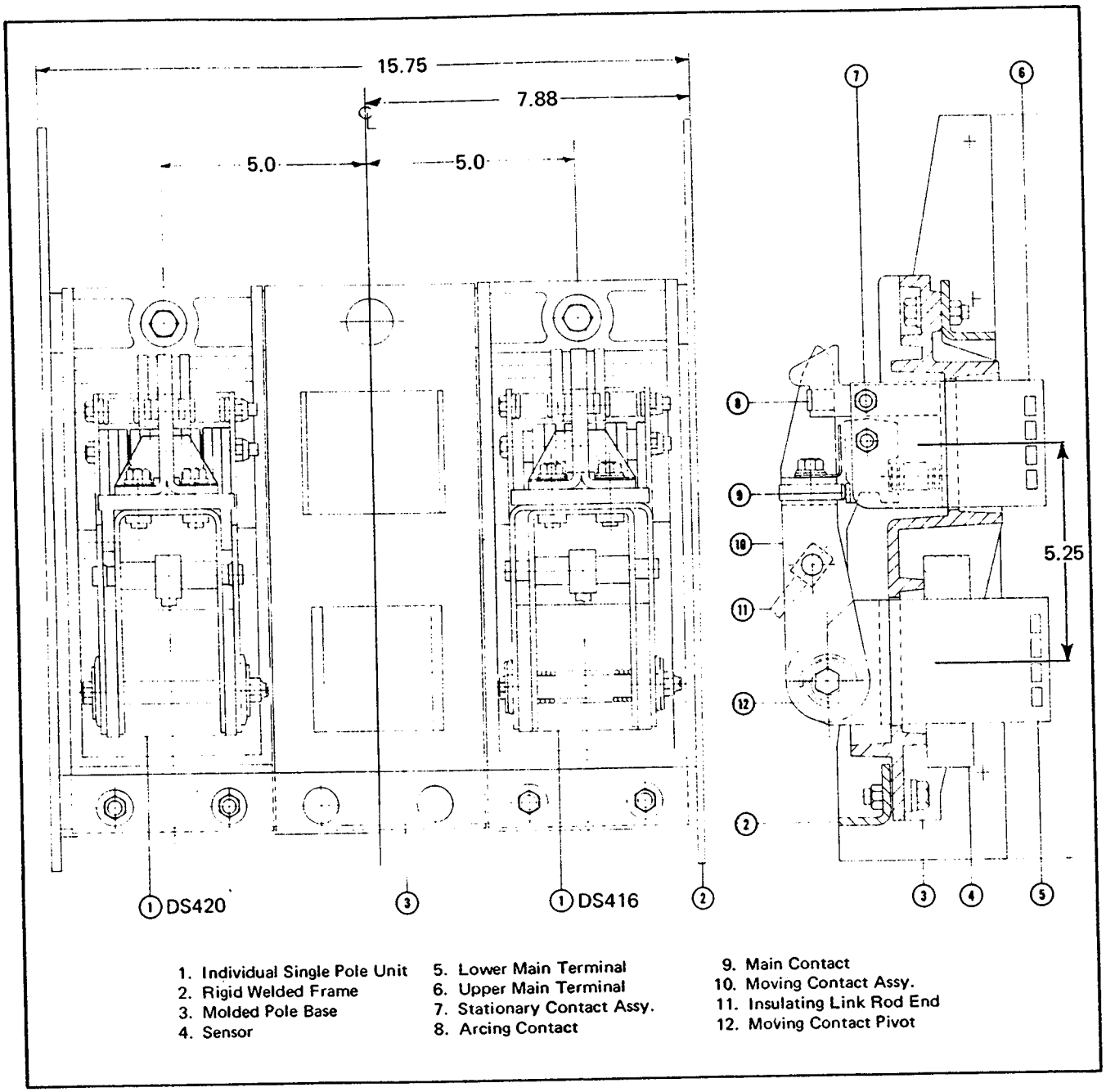

Fig. 34 *Three-Pole Assembly of DS-416 and DS-420 Pole Units on Frame*

assembly. This has the arcing contact tips, of arc resisting metallic composition, permanently fastened near the upper end of the assembly. The moving contact blade assembly is operated by a strong and rigid insulating link.

6.2 STATIONARY CONTACT SUB-ASSEMBLIES

The stationary contact sub-assemblies may be seen in Figures 47, 48, 49, 51 and 53. All main contacts, i.e.

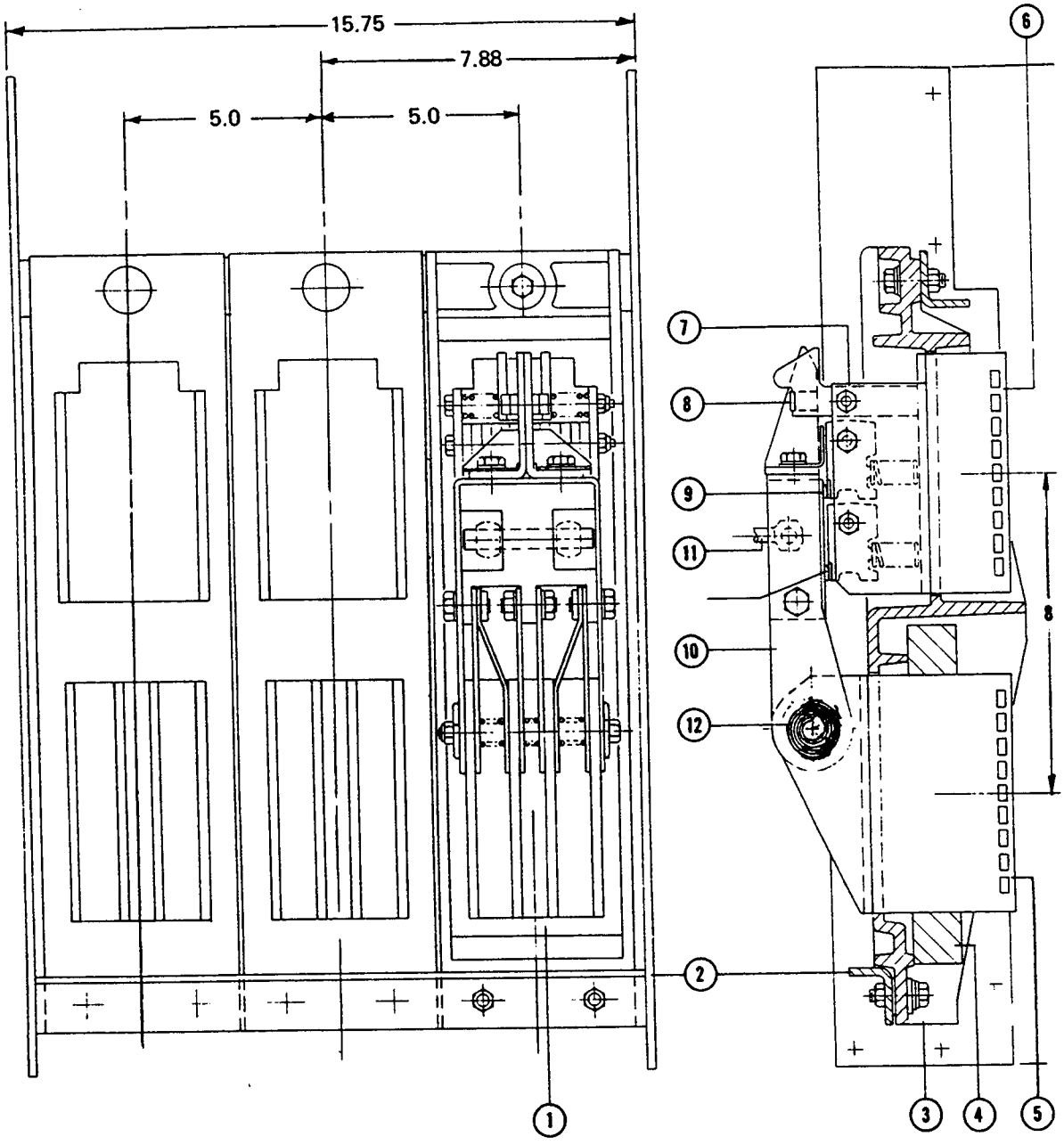

1. Single Pole Unit
2. Rigid Welded Frame
3. Molded Pole Base
4. Sensor
5. Lower Main Terminal
6. Upper Main Terminal
7. Stationary Contact Assembly
8. Arcing Contact
9. Main Contacts
10. Moving Contact Assembly
11. Insulating Link Rod Ends
12. Moving Contact Pivot

Fig. 35 *Three-Pole Assembly of DS-632 Pole Units on Frame*

those which carry the main continuous load current, are of the butt type composed of a multiplicity of fingers. Each finger is hinged at the upper end under controlled pressure. Compression springs at the lower end apply predetermined pressure against the moving main contact in closing, and standing in the closed position. These springs are visible in the photograph of the DS206 only. With this construction, the pressure on the main contact surfaces is increased during the carrying and opening of high short circuit currents because the magnetic field of the current pushes the lower end of the finger toward the moving contact. Hinging the finger at the top thus results in what is sometimes called "blow-on" action. This greatly increases the capability of the entire contact assembly to withstand the high fault currents associated with these breaker ratings.

The stationary arcing contacts are similar for all ratings and consist of two parallel fingers, one on each side of the stationary terminal member. They are pushed toward each other by compression springs and have arc resisting tips.

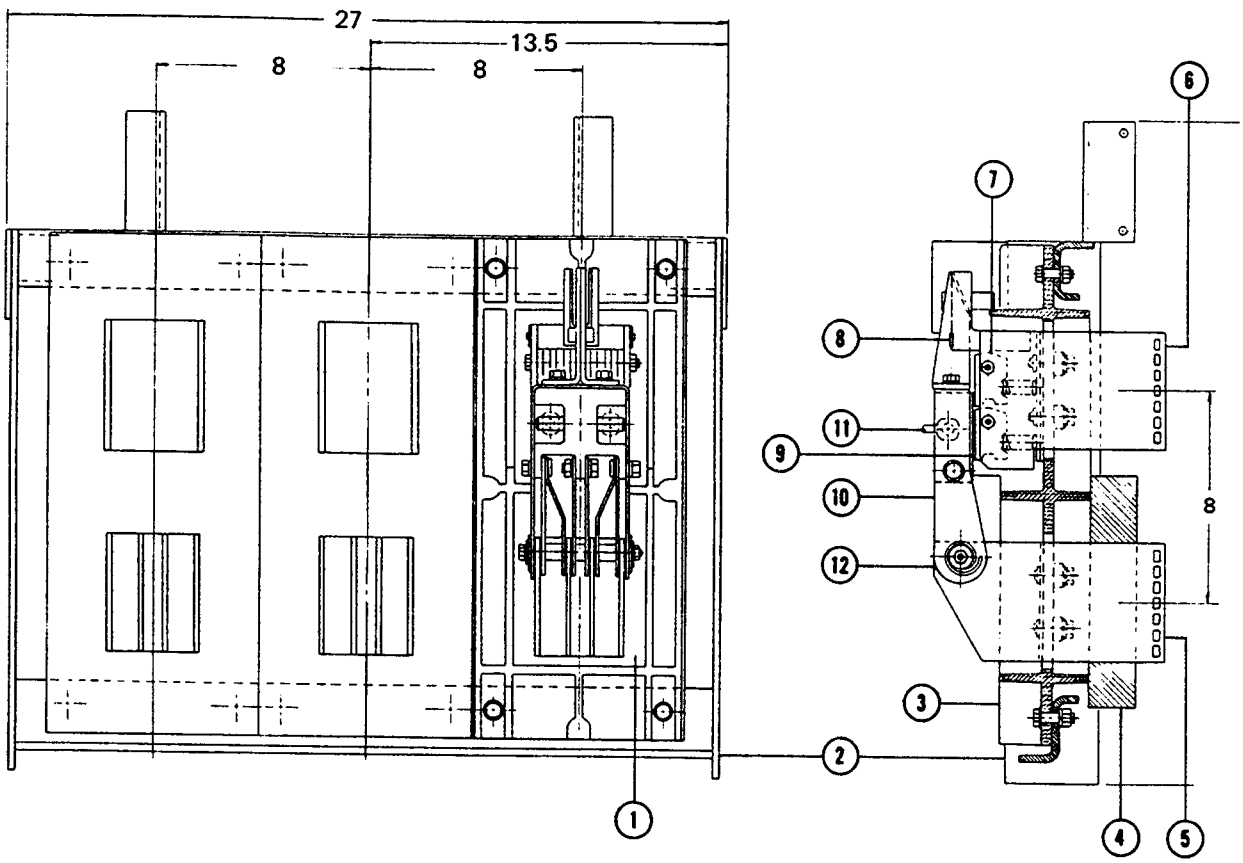

1. Single Pole Unit
2. Rigid Welded Frame
3. Molded Pole Base
4. Sensor
5. Lower Main Terminal
6. Upper Main Terminal
7. Stationary Contact Assembly
8. Arcing Contact
9. Main Contacts
10. Moving Contact Assembly
11. Insulating Link Rod Ends
12. Moving Contact Pivot

Fig. 36 *Three Pole Assembly of DS-840 Pole Units on Frame*

The moving arcing contact thus wedges the stationary contact fingers apart as the breaker closes.

The parallel action of the magnetic fields of the currents in each arcing contact finger causes the fingers to be attracted toward each other when closing against fault currents. This results in a "blow-on" action on the arcing contacts.

Figures 37 thru 46 show the combined moving and stationary contact sub-assemblies of the various breakers. This shows the proper relationships, clearances and contact deflections of the various parts.

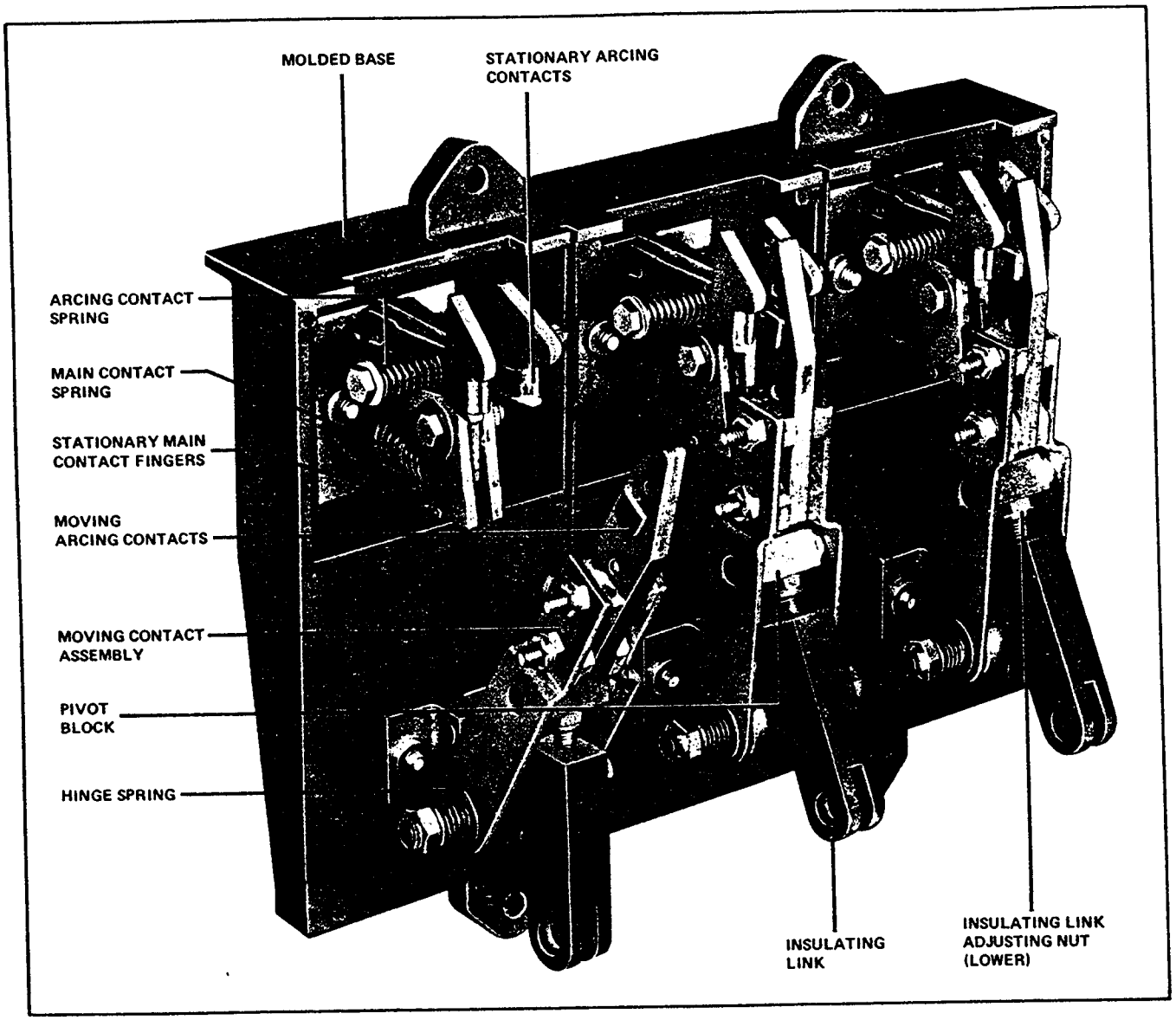

Fig. 37 *Type DS-206 Pole Unit Assembly - Front View (384502)*

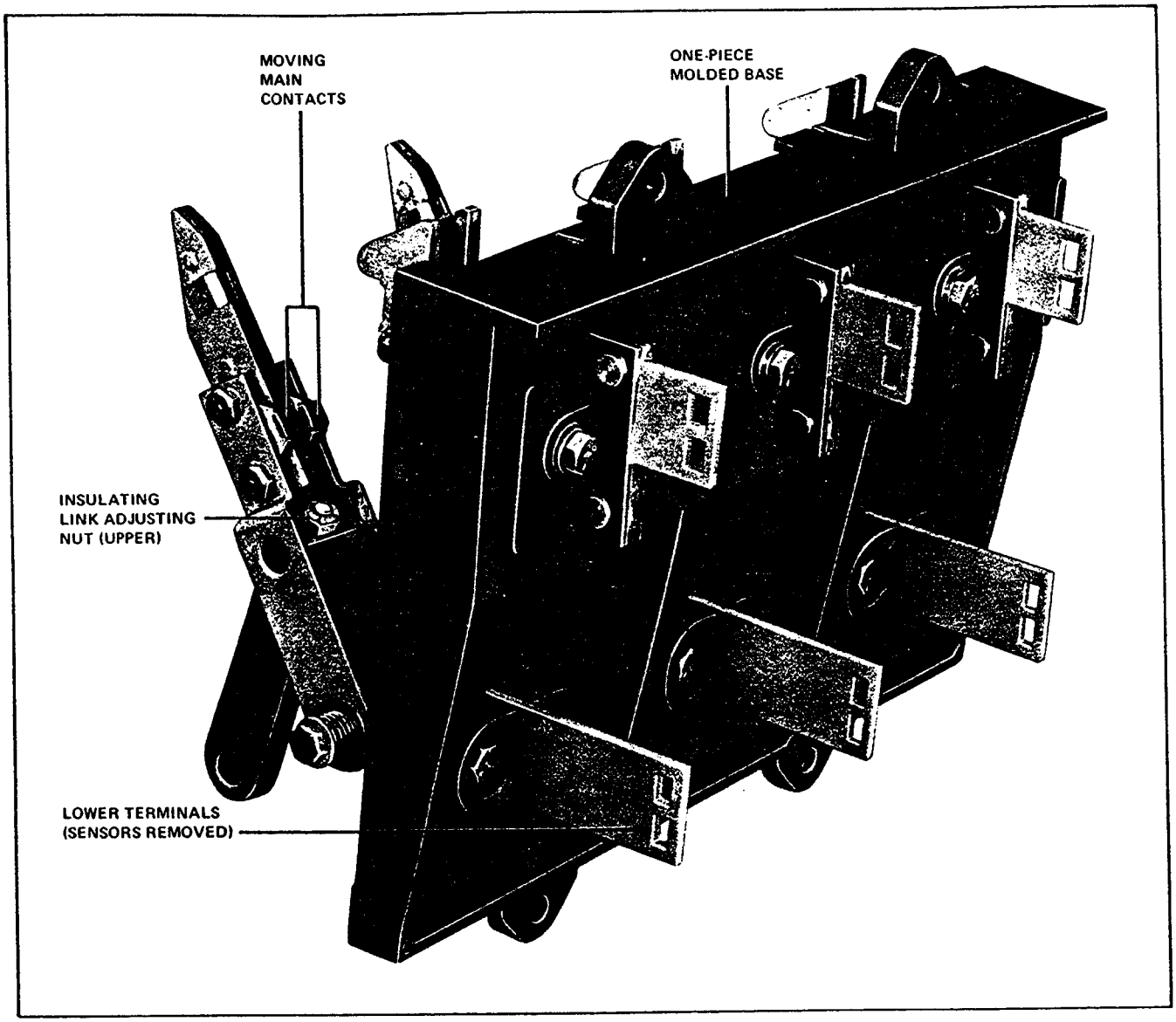

Fig. 38 *Type DS-206 Pole Unit Assembly - Rear View (384499)*

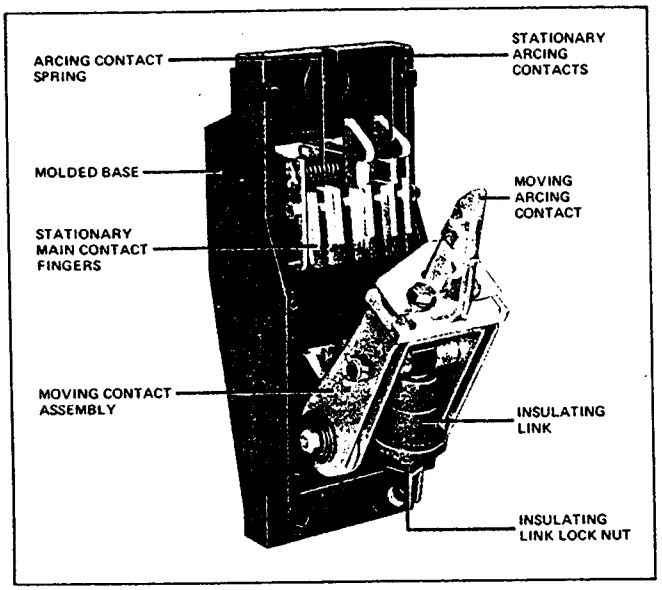

Fig. 39 *Type DS-416 Pole Unit Assembly - Front View (383420)*

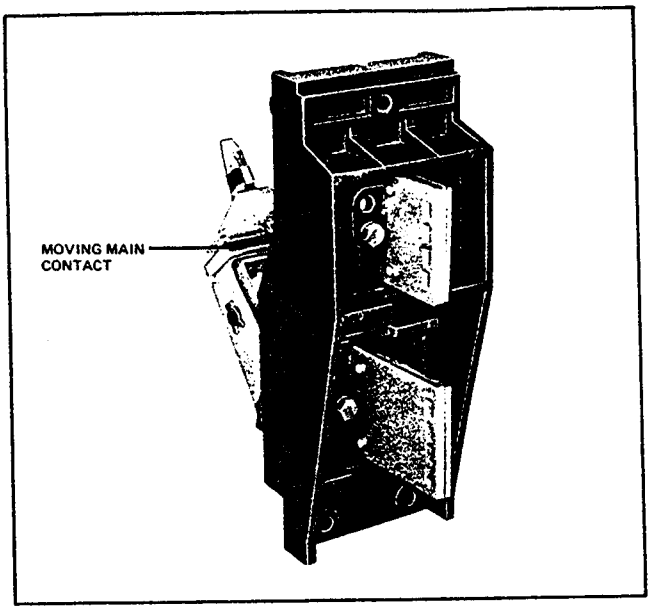

Fig. 40 *Type DS-416 Pole Unit Assembly - Rear View (391098)*

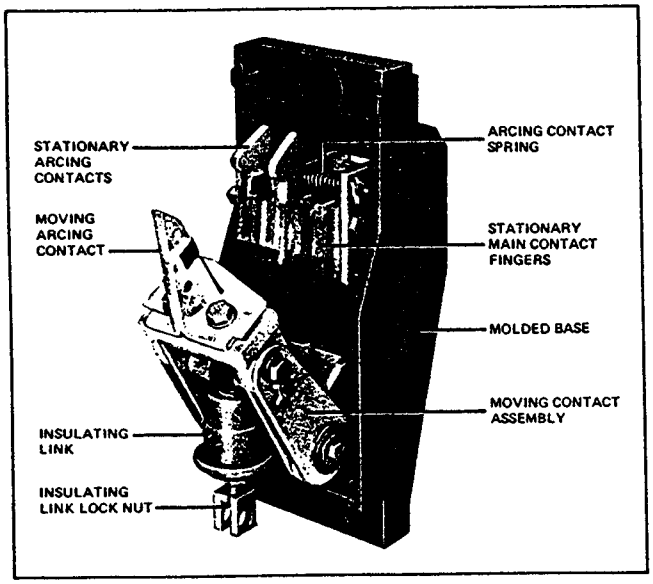

Fig. 41 *Type DS-420 Pole Unit Assembly - Front View (391101)*

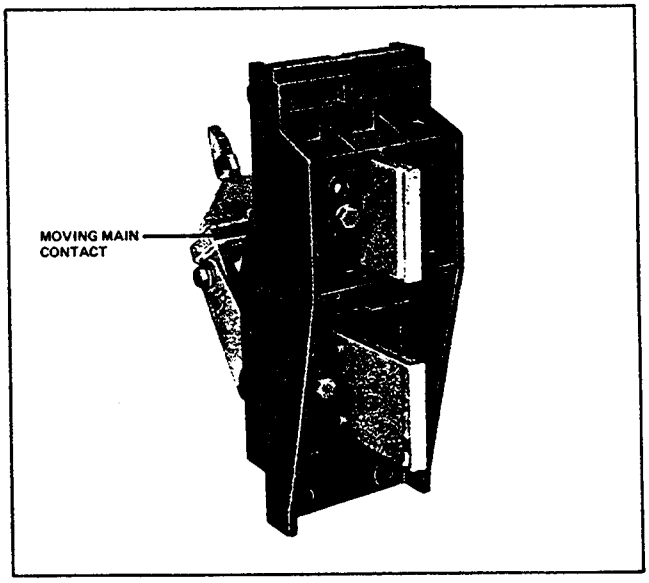

Fig. 42 *Type DS-420 Pole Unit Assembly - Rear View (391099)*

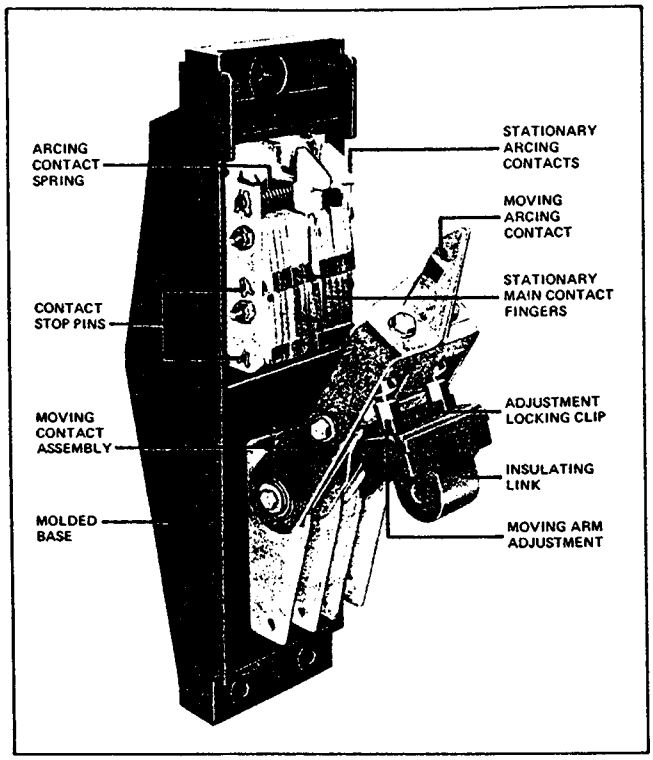

Fig. 43 *Type DS-632 Pole Unit Assembly - Front View (383418)*

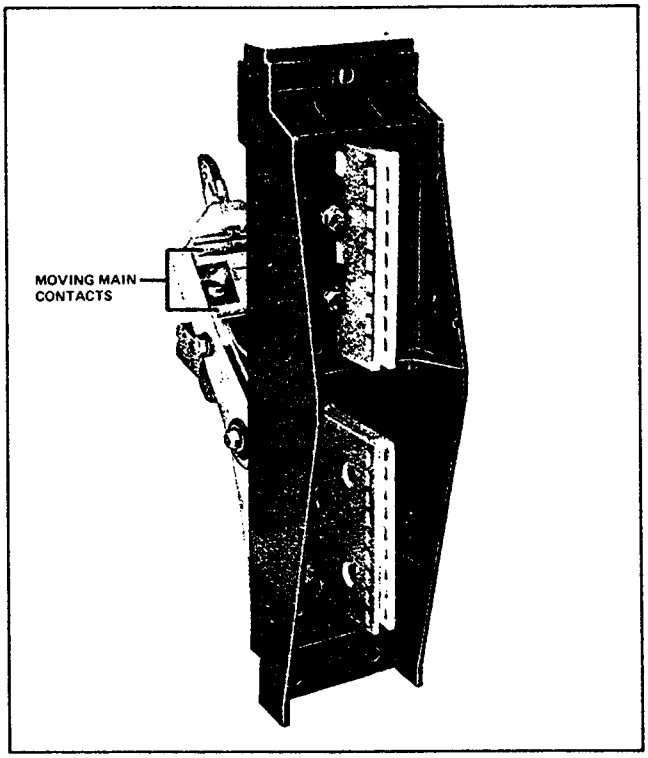

Fig. 44 *Type DS-632 Pole Unit Assembly - Rear View (391095)*

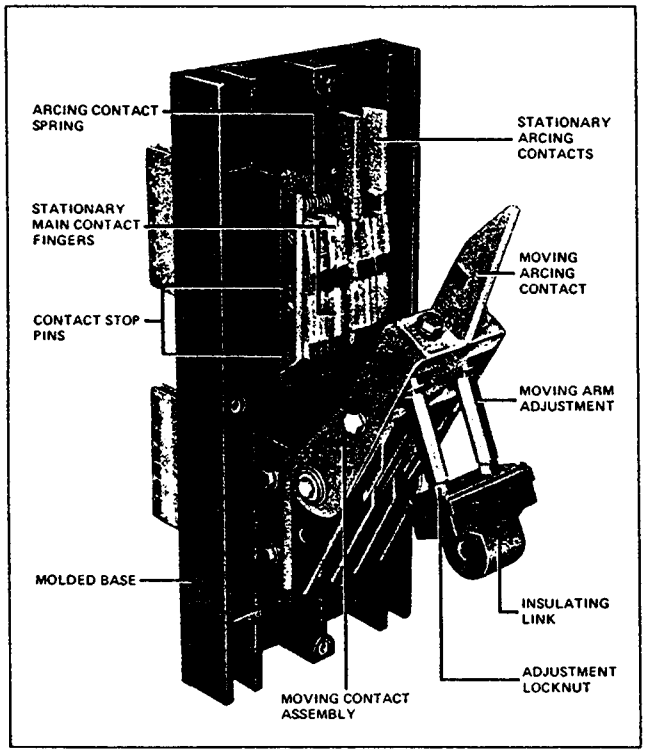

Fig. 45 *Type DS-840 Pole Unit Assembly - Front View (391094)*

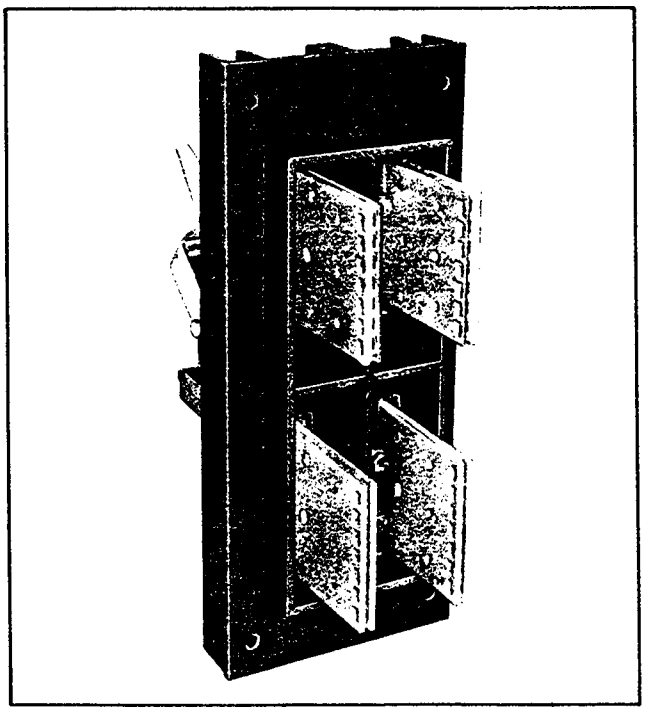

Fig. 46 *Type DS-840 Pole Unit Assembly - Rear View (391097)*

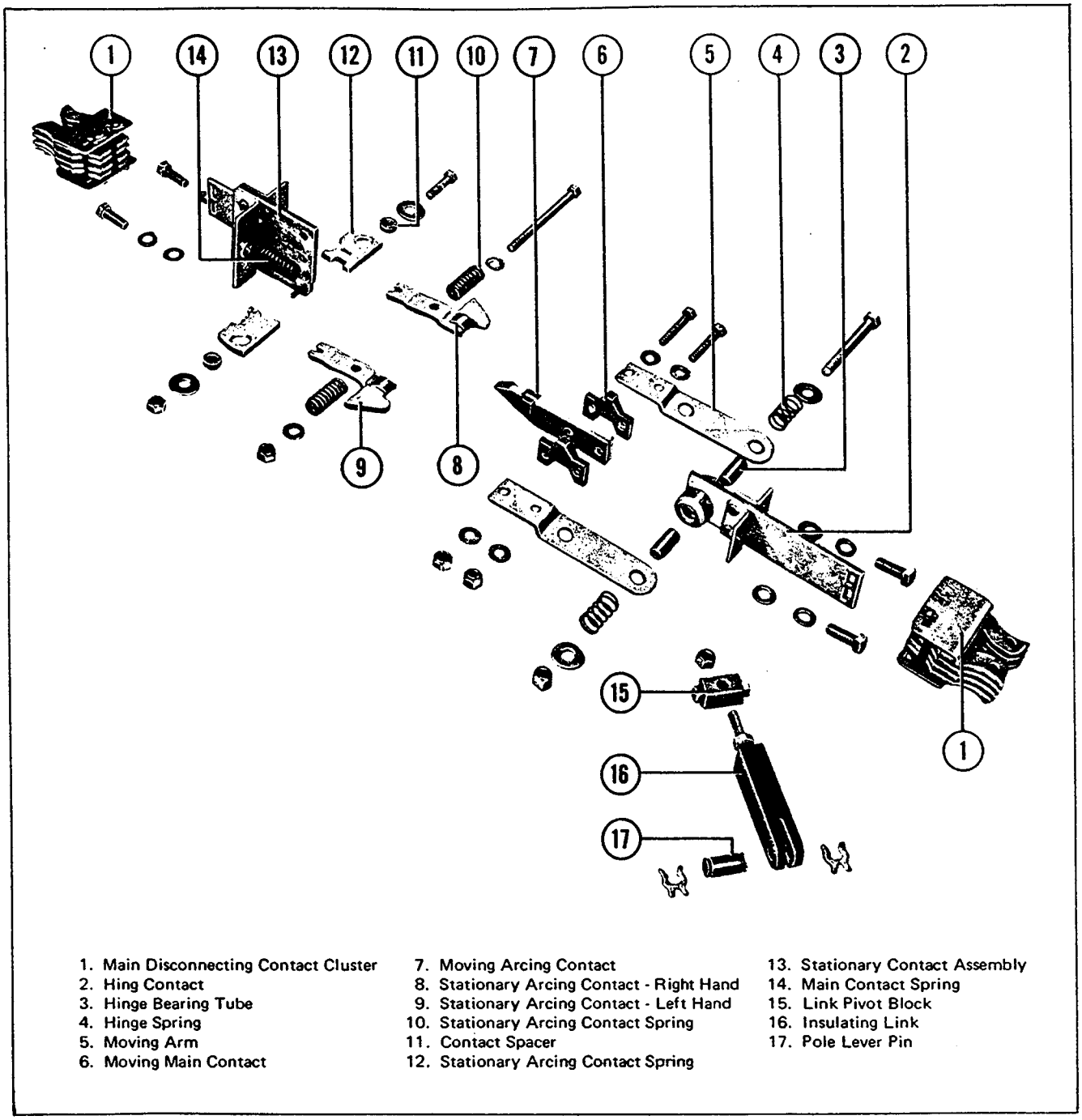

1. Main Disconnecting Contact Cluster
2. Hing Contact
3. Hinge Bearing Tube
4. Hinge Spring
5. Moving Arm
6. Moving Main Contact
7. Moving Arcing Contact
8. Stationary Arcing Contact - Right Hand
9. Stationary Arcing Contact - Left Hand
10. Stationary Arcing Contact Spring
11. Contact Spacer
12. Stationary Arcing Contact Spring
13. Stationary Contact Assembly
14. Main Contact Spring
15. Link Pivot Block
16. Insulating Link
17. Pole Lever Pin

Fig. 47 *Moving and Stationary Contact Details DS-206 (383979)*

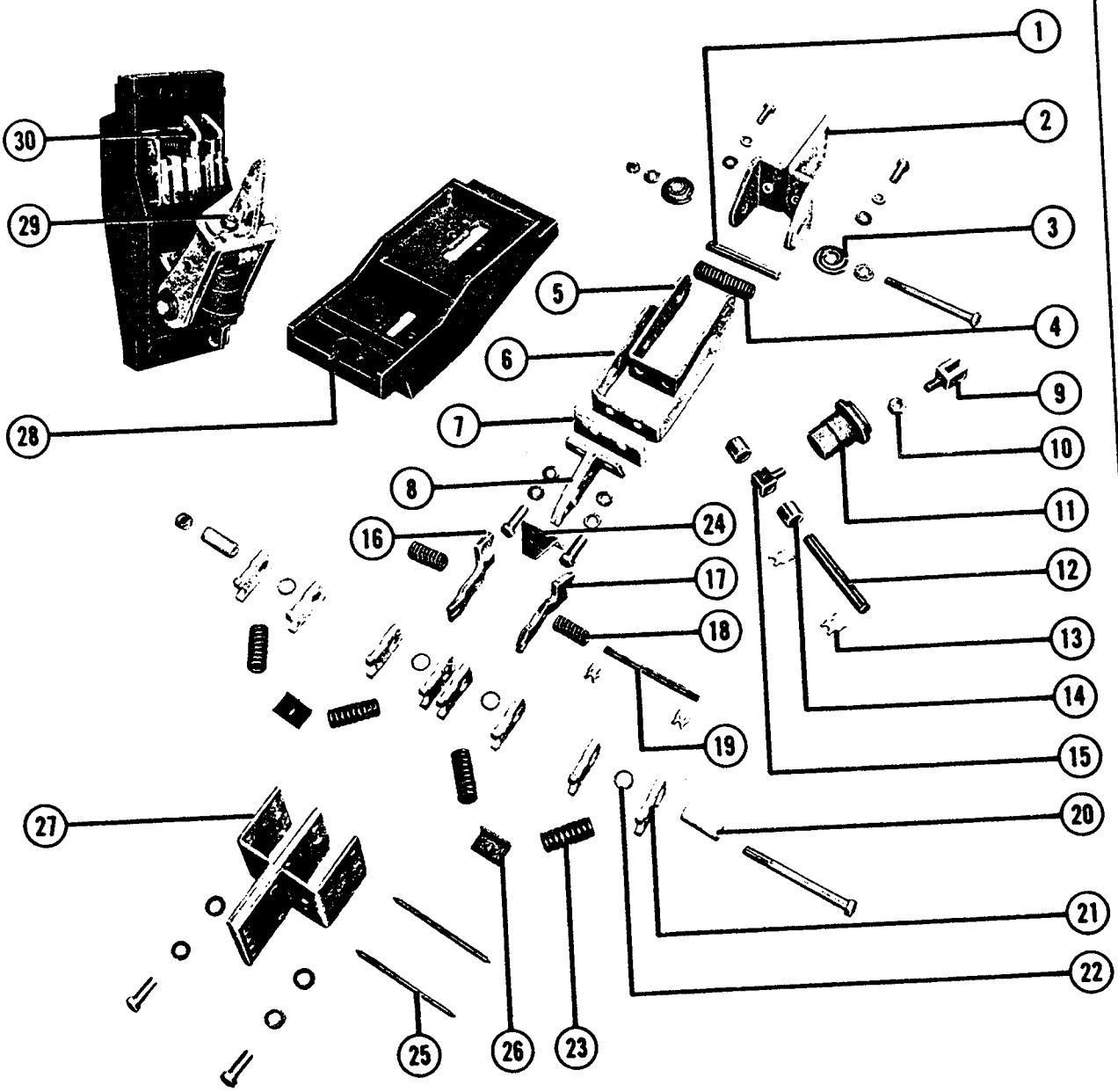

1. Hinge Bearing Tube
2. Hinge Assembly
3. Spring
4. Hinge Spring
5. Moving Arm - Inner
6. Moving Arm - Outer
7. Moving Main Contact
8. Moving Arcing Contact
9. Clevis
10. Insulating Link Lock Nut
11. Insulating Link
12. Operating Link Upper Pin
13. Retainer
14. Spacer
15. Rod End
16. Stationary Arcing Contact - Right Hand
17. Stationary Arcing Contact - Left Hand
18. Stationary Arcing Contact Spring
19. Arcing Contact Retaining Pin
20. Bearing Tube
21. Main Contact Fingers
22. Contact Spacer
23. Contact Spring
24. Arc Runner
25. Pin
26. Spring Seat
27. Stationary Contact Cage
28. Base Mold
29. Moving Contact Assembly
30. Stationary Contact Assembly

Fig. 48 *Moving and Stationary Contact Details DS-416 (391100) (383416)*

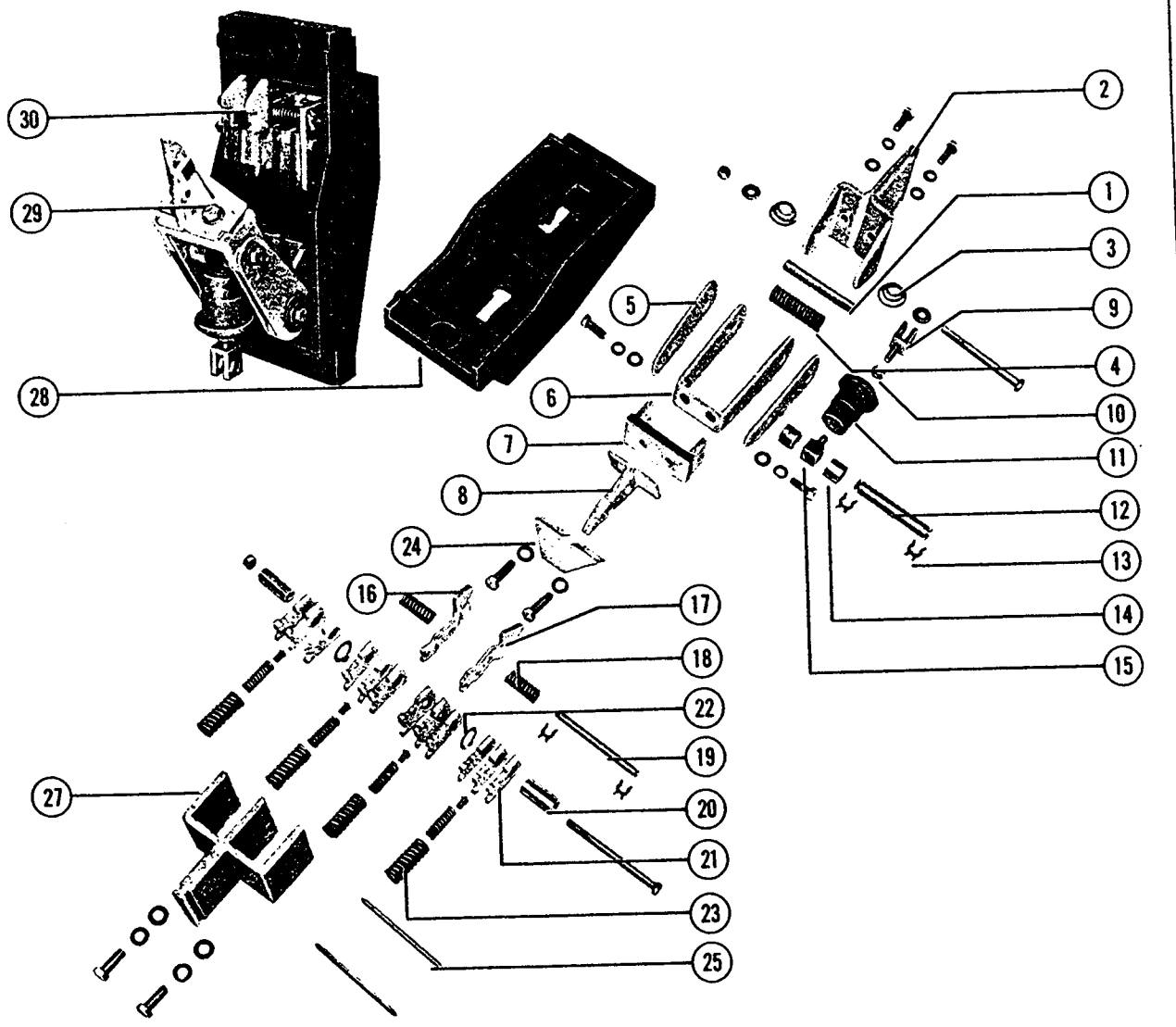

1. Hinge Bearing Tube
2. Hinge Assembly
3. Spring
4. Hinge Spring
5. Moving Arm - Inner
6. Moving Arm - Outer
7. Moving Main Contact
8. Moving Arcing Contact
9. Clevis
10. Insulating Link Lock Nut
11. Insulating Link
12. Operating Link Upper Pin
13. Retainer
14. Spacer
15. Rod End
16. Stationary Arcing Contact - Right Hand
17. Stationary Arcing Contact - Left Hand
18. Stationary Arcing Contact Spring
19. Arcing Contact Retaining Pin
20. Bearing Tube
21. Main Contact Fingers
22. Contact Spacer
23. Contact Spring
24. Arc Runner
25. Pin
27. Stationary Contact Cage
28. Base Mold
29. Moving Contact Assembly
30. Stationary Contact Assembly

Fig. 49 *Moving and Stationary Contact Details DS-420 (391086)*

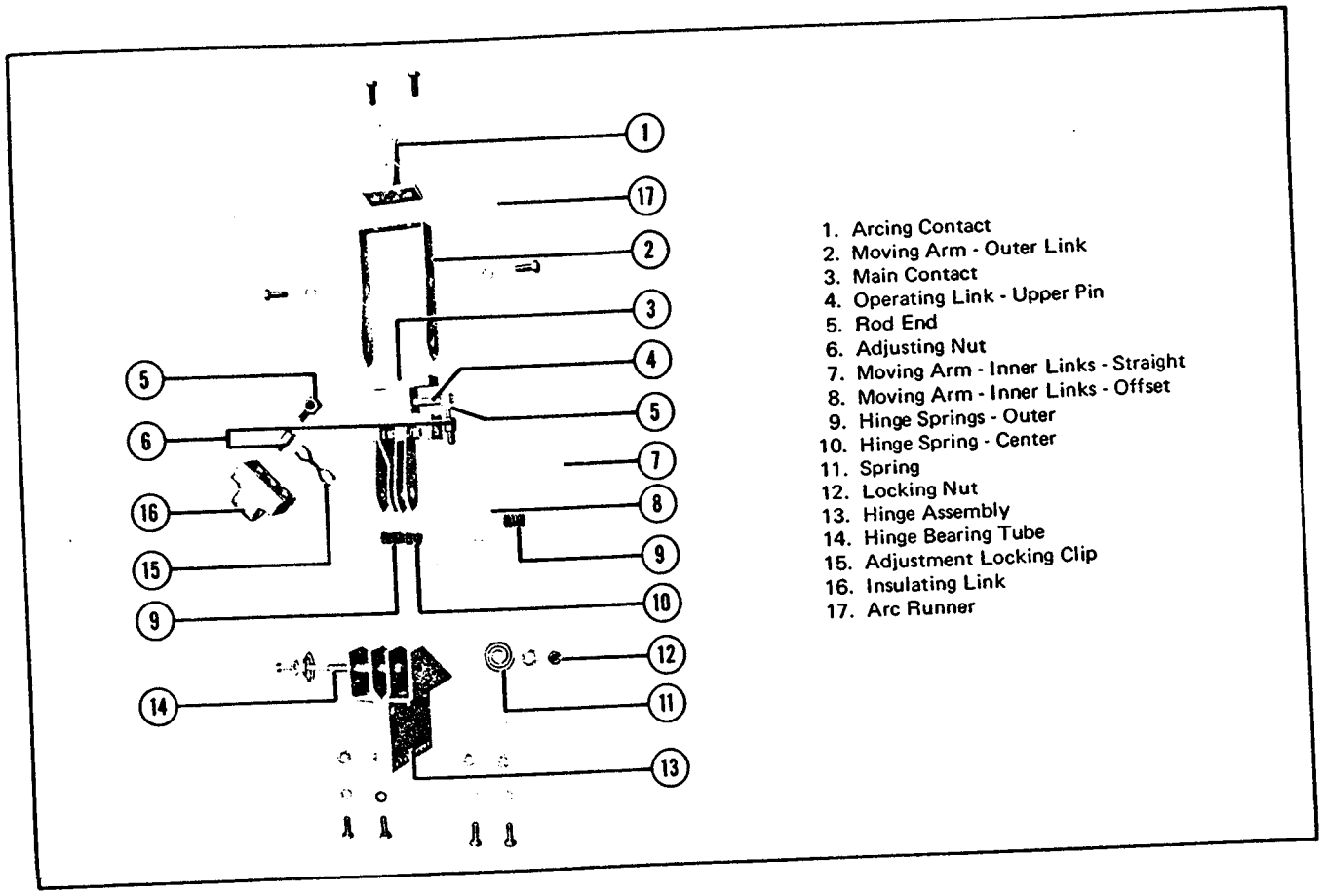

Fig. 50 *Moving Contact Details DS-632 (383415)*

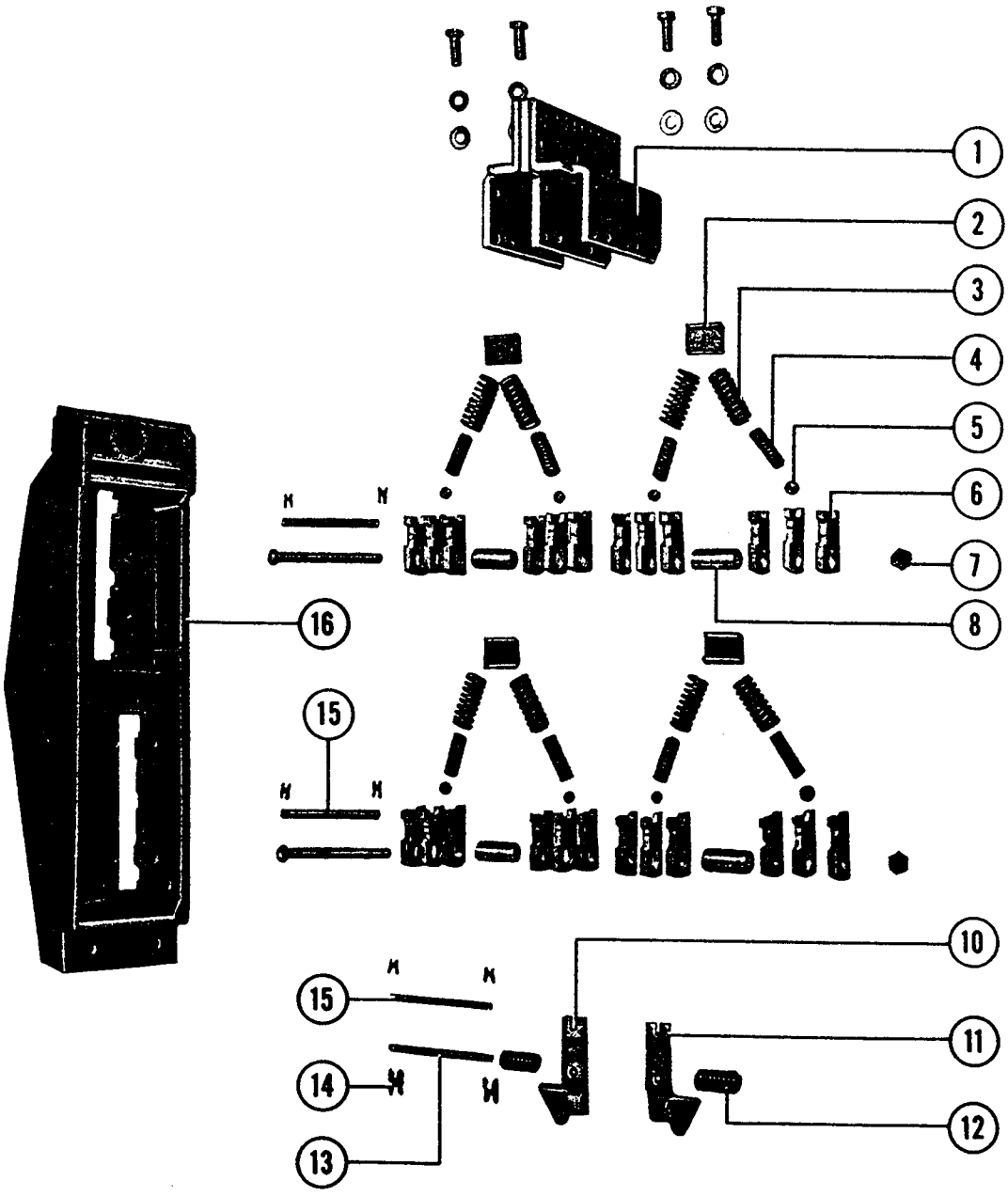

1. Stationary Contact Cage
2. Spring Seat
3. Contact Spring - Outer
4. Contact Spring - Inner
5. Spring Button
6. Main Contact Fingers
7. Locking Nut
8. Bearing Tube
10. Arcing Contact - Left Hand
11. Arcing Contact - Right Hand
12. Arcing Contact Spring
13. Arcing Contact Retaining Pin
14. Retainer
15. Pin
16. Base Mold

Fig. 51 *Stationary Contact Details DS-632 (383414)*

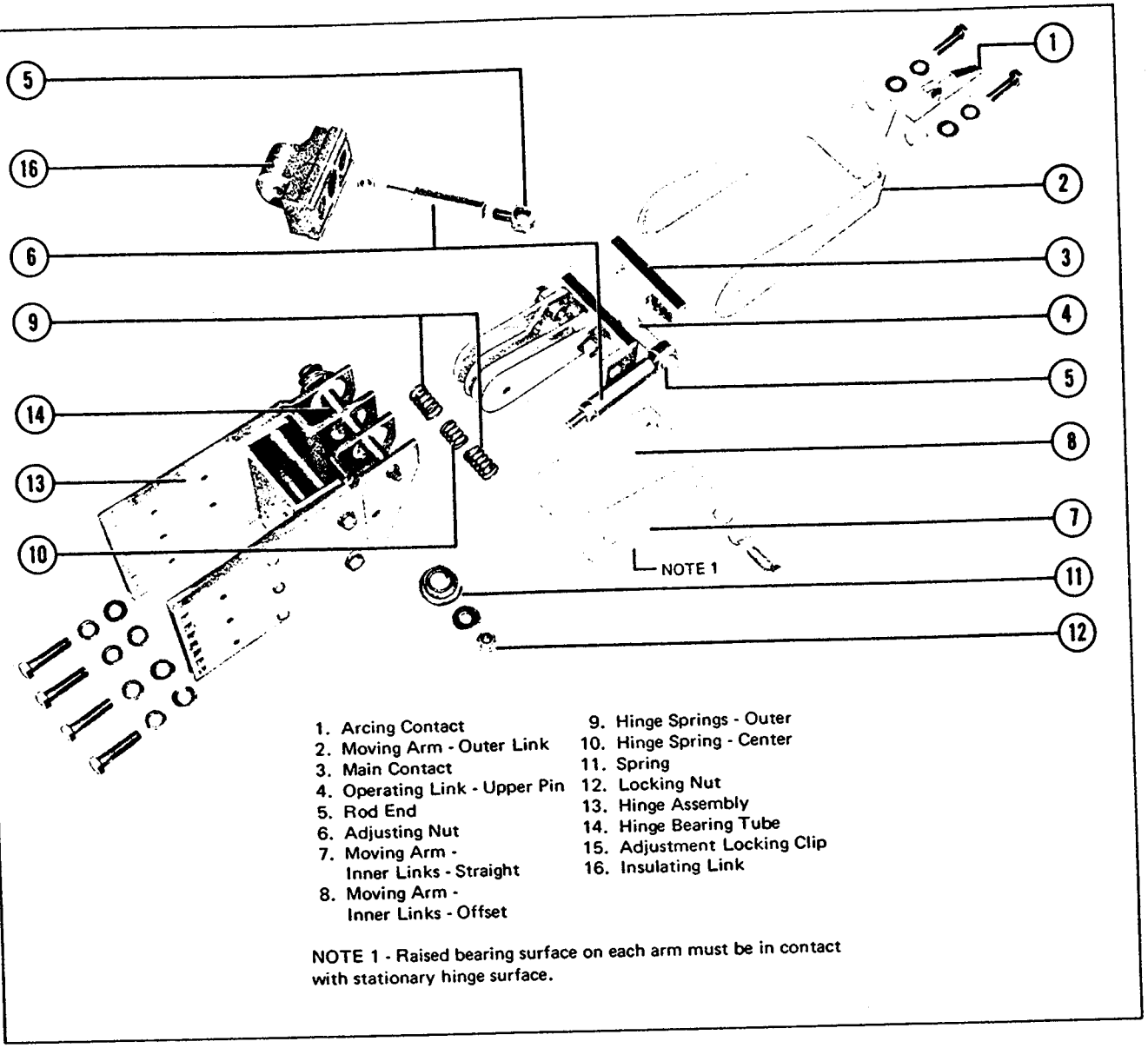

1. Arcing Contact
2. Moving Arm - Outer Link
3. Main Contact
4. Operating Link - Upper Pin
5. Rod End
6. Adjusting Nut
7. Moving Arm - Inner Links - Straight
8. Moving Arm - Inner Links - Offset
9. Hinge Springs - Outer
10. Hinge Spring - Center
11. Spring
12. Locking Nut
13. Hinge Assembly
14. Hinge Bearing Tube
15. Adjustment Locking Clip
16. Insulating Link

NOTE 1 - Raised bearing surface on each arm must be in contact with stationary hinge surface.

Fig. 52 *Moving Contact Details DS-840 (391084)*

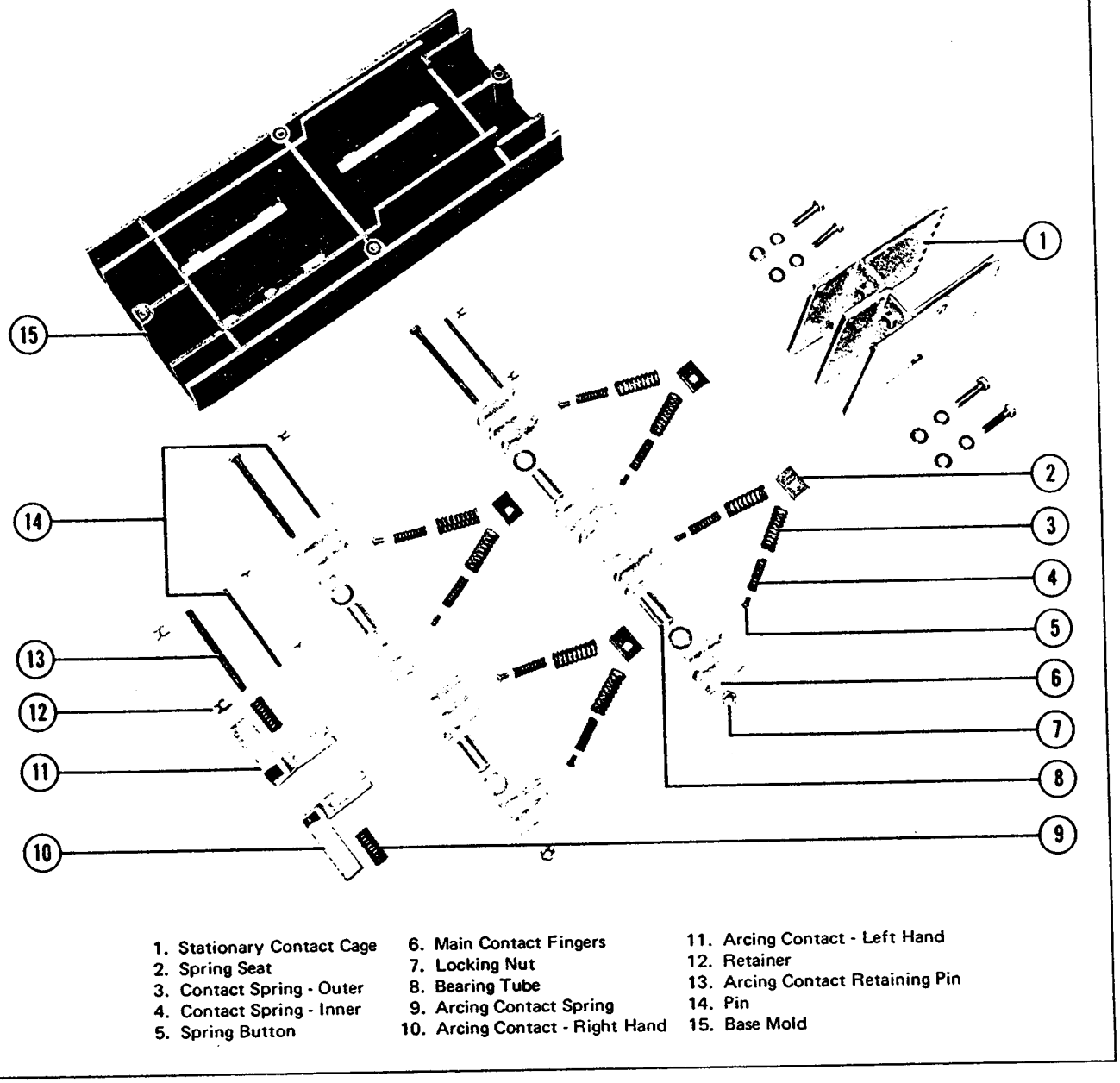

Fig. 53 *Stationary Contact Details DS-840 (391271)*

Section 7 - Arc Chute

7.0 GENERAL

Figure 54 is a close-up view of a breaker with one insulating barrier removed to show the arc chute in place on the pole unit. Similar designs of arc chutes are used on the DS416, DS420 and DS632 assemblies with a smaller one on the DS206 and a slightly larger one on the DS840.

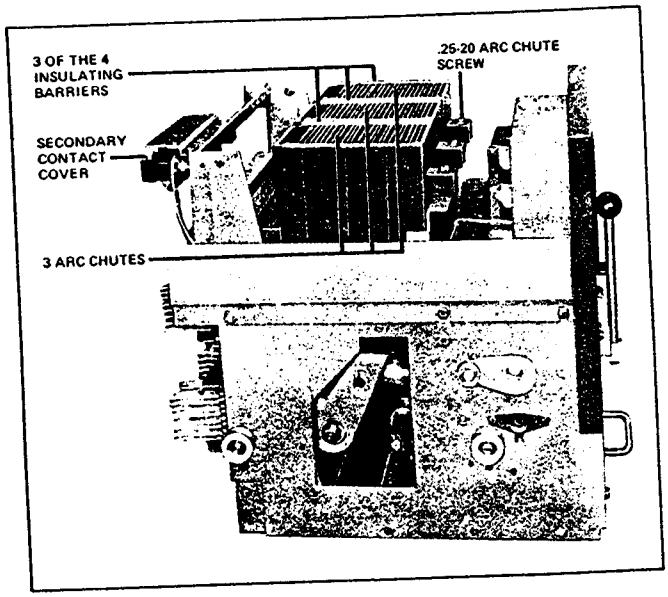

Fig. 54 *Breaker with Barrier Removed to Show Mounting of Arc Chutes (391072)*

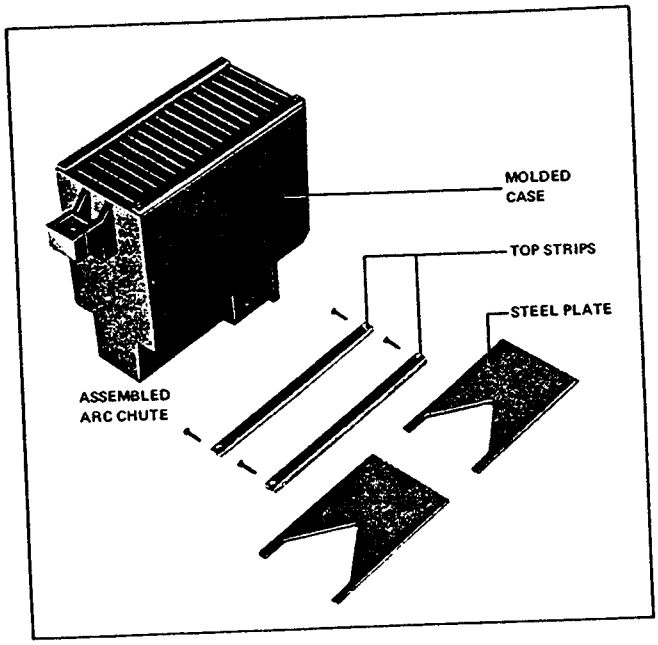

Fig. 55 *DS-206 Arc Chute with Details (383973)*

The arc chute fits well down over the arcing contacts so that the arc is confined inside the chute at all times and for all values of current. In the arc chute, immediately above the arcing contacts, are spaced crosswise vertical

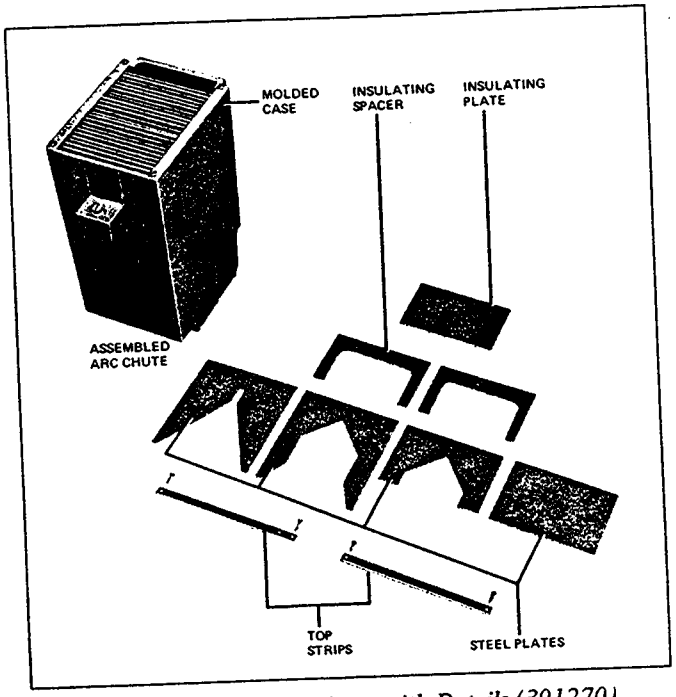

Fig. 56 *DS-416/420 Arc Chute with Details (391270)*

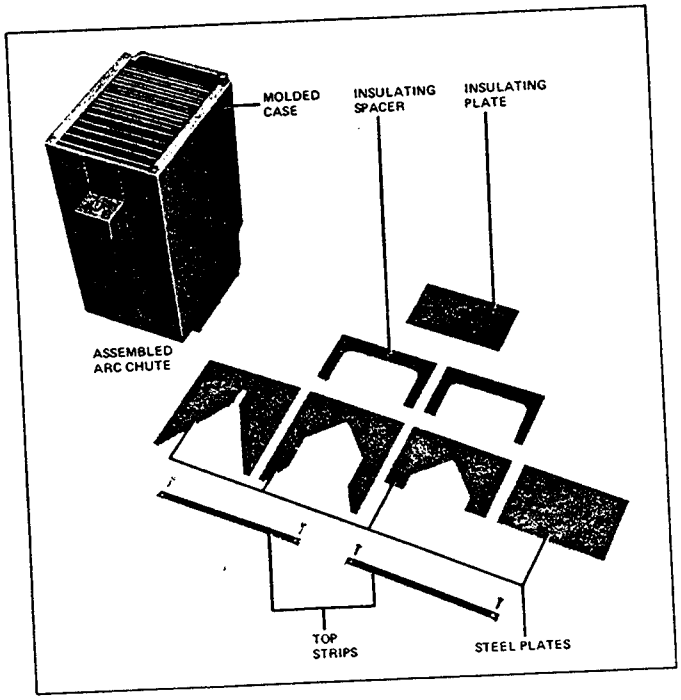

Fig. 57 *DS-632 Arc Chute with Details (391269)*

steel splitter plates having an inverted "V" notch to attract the arc and interrupt it essentially the cooling and stretching the arc.

The DS206 arc chute is shown in Figure 55. The larger arc chute for the DS416 and DS420 is shown in Figure 56, the DS632 arc chute is shown in Figure 57 and the DS840 arc chute is shown in Figure 58.

In addition to the steel plates, the larger arc chutes include hard arc-resisting glass polyester plates. These plates produce turbulence in the exhaust gases above the steel plates and prevent electrical breakdown over the top of the arc chute or to ground.

WARNING

ALL ARC CHUTES AND BARRIERS MUST BE IN PLACE BEFORE RETURNING BREAKER TO COMPARTMENT. IF BREAKER IS ENERGIZED WITHOUT CHUTES AND BARRIERS BEING INSTALLED, IT COULD CAUSE A DISASTROUS SHORT-CIRCUIT FAULT WITHIN THE SYSTEM; AND IT MAY RESULT IN BODILY INJURY AND EQUIPMENT DAMAGE.

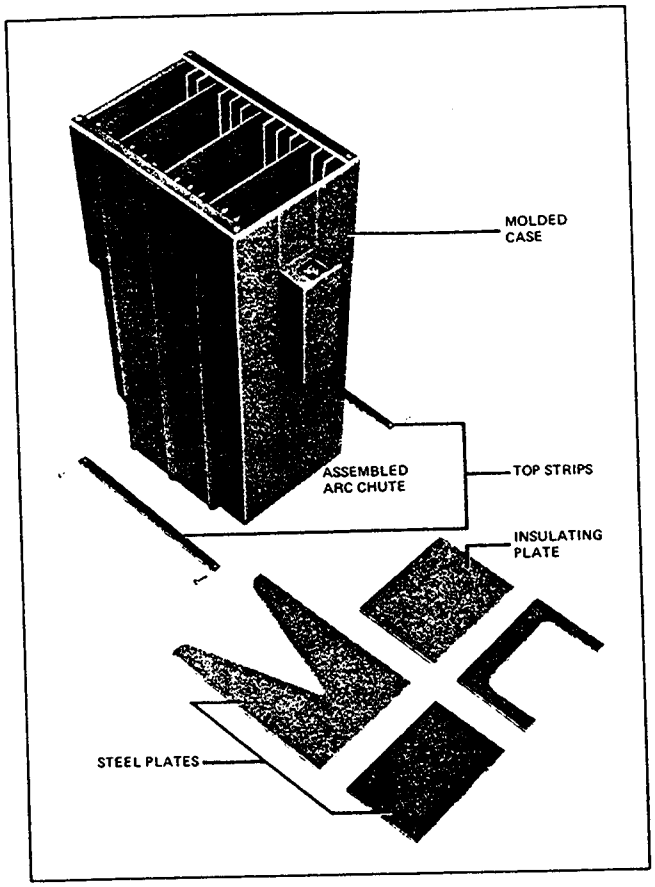

Fig. 58 *DS-840 Arc Chute with Details (391092)*

Section 8 - Circuit Breaker Automatic Tripping System

8.0 GENERAL

The circuit breaker is tripped on overload and short circuit conditions by combined action of three components:

1. The sensors which determine the current level.

2. The Amptector solid-state trip unit which provides a tripping signal when pre-determined current levels are reached.

3. The Actuator which actually trips the circuit breaker.

Schematically this may be represented as shown in Figure 59. This provides a very flexible system covering a wide range of tripping characteristics. Not only is the Amptector trip unit adjustable but the sensors are available over a wide range of current ratings.

The automatic overload and short circuit tripping characteristics for a specific breaker rating, as determined by the sensor rating, are determined by the settings of the Amptector solid-state trip unit. This unit also supplies a pulse of tripping current to the actuator. Thus all tripping functions are performed by secondary control circuitry, with no mechanical or direct magnetic action between the primary current and the mechanical tripping parts of the breaker.

The Amptector solid-state trip units are available in two basic versions; the Amptector II-A and the Amptector I-A.

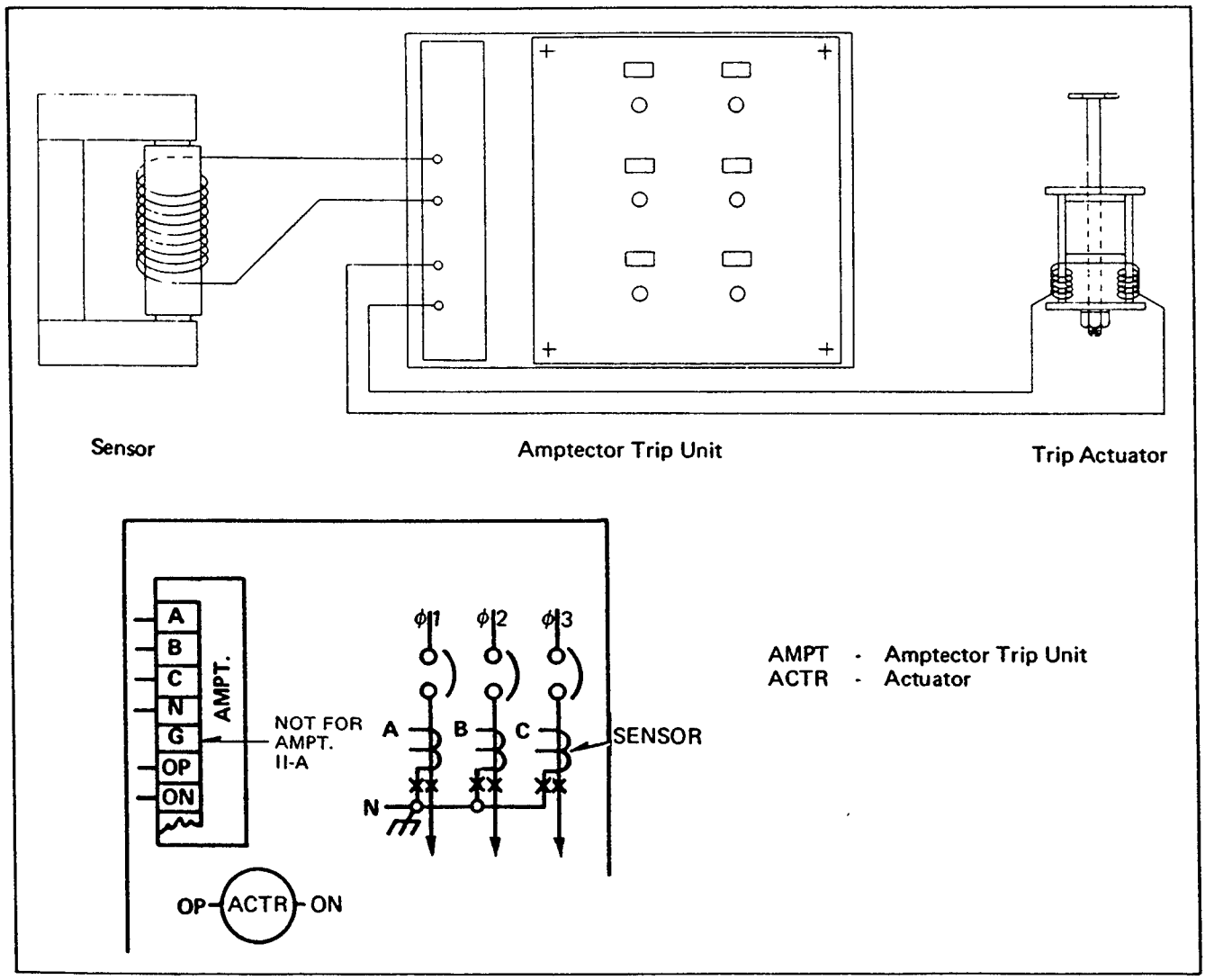

Fig. 59 *Schematic Illustration of Tripping System*

8.1 THE AMPTECTOR II-A TRIP UNIT

Improvements have been made to the Westinghouse Amptector and the standard model is now Amptector II-A. Wiring and terminal changes were made to provide method of testing with a tester. Refer to Section 8.7.6 for testing with Amptector Test Kit.

Another change was to modify the long delay curve to nearly an I^2T function. The revised curve shows this change. See Curve No. 1.

The Amptector II-A is standard equipment on all DS and DSL circuit breakers. It provides approximately equivalent functions as the electro-mechanical trip devices provided on some circuit breakers but with the superior operating capability of solid-state devices. The Amptector I-A is an optional (extra cost) tripping system which can be provided when ground fault protection or trip indicators are required. Both trip units have the same reliability and repeatability inherent in solid-state design.

As shown in Figure 5 the Amptector trip unit is at the top front of the breaker. Figure 60 shows a close-up of the front of the Amptector II-A trip unit. There can be a total of five adjustable controls, with screwdriver adjustment. These are for setting the following characteristics:

1. Long-delay current pick-up.
2. Long-delay time.
3. Short-delay current pick-up.
4. Short-delay time.
5. Instantaneous current pick-up.

NOTE

The term "pick-up" as used here means the rms value of current at which the Amptector trip unit timing function begins or instantaneous tripping is intiated.

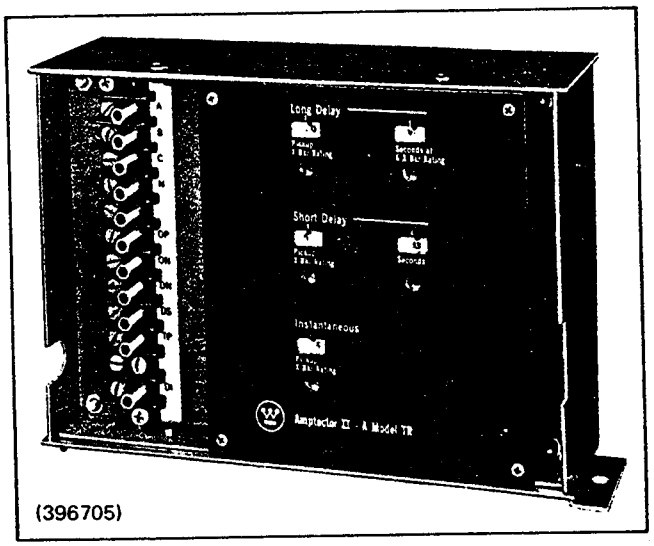

Fig. 60 *Standard Amptector II-A Solid-State Trip Unit*

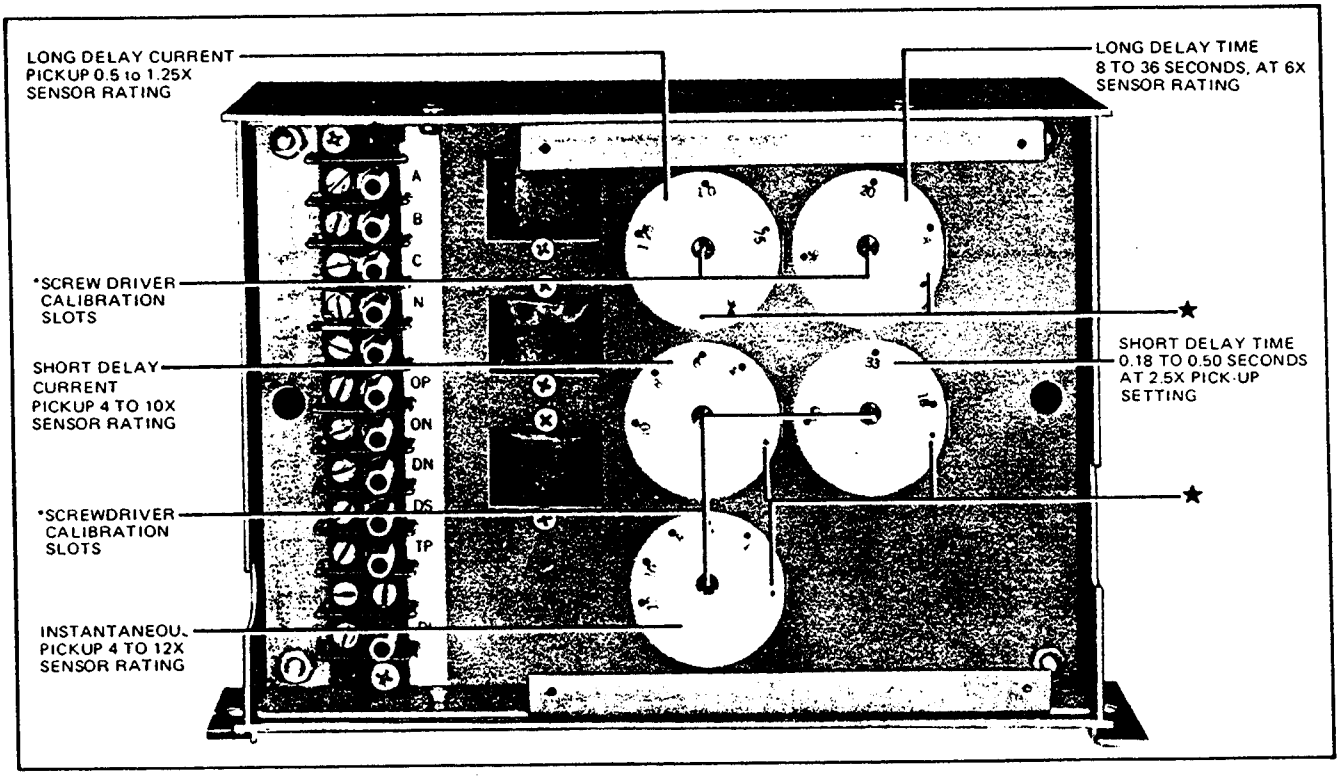

* See Section 8.4 of Text for Explanation

Fig. 61 *Amptector II-A Trip Unit with Front Cover Removed (396704)*

Figure 61 is the Amptector II-A trip unit with front cover removed, showing all of the calibration marks on the dials. The ranges of current settings in multiples of sensor rating and time delay are as follows:

1. Long-delay pick-up	.5 to 1.25 X sensor rating
2. Long-delay	8 to 36 seconds, at 6 X sensor rating

Over these ranges tripping will always occur within the time band shown on Curve No. 1, page 59. The bottom of the band is called the resettable delay. If the overload subsides in less than the resettable delay time, resetting of the trip unit will occur within a few cycles after the load drops to less than 90% of the pick-up setting.

3. Short-delay pick-up	4 to 10 X sensor rating
4. Short delay	.18 seconds to .50 seconds or 11 to 30 cycles at 60 Hz, at 2.5 X pick-up setting.

Over these ranges tripping will always occur within the time band shown on Curve No. 1, page 59. Although the time adjustment is continuous, three time bands are calibrated as shown on the curve.

5. Instantaneous Pick-up	4 to 12 X sensor rating

Three different combinations of trip elements are provided. Those combinations with the corresponding Amptector II-A model designations as follows:

1. Long Delay Instantaneous	DU (DUAL)
2. Long Delay Short Delay	SE (SELECTIVE)
3. Long Delay Short Delay Instantaneous	TR (TRIPLE)

Each Amptector II-A trip unit has a terminal block accessible on the front of the circuit breaker front panel.

Figure 59 shows a typical standard wiring diagram, which includes the Amptector II-A trip unit terminal block. The following table explains the markings of the terminals:

A Sensor phase A	ON Output negative*
B Sensor phase B	DN Test point (internal neutral)**
C Sensor phase C	DS Test point**
N Sensor neutral	TP Test point**
OP Output positive*	DI Test point**

*To Actuator Coil. THIS COIL HAS A POLARITY MARKING ON THE POSITIVE LEAD WHICH MUST BE OBSERVED. OTHERWISE THE BREAKER WILL NOT HAVE OVERLOAD OR FAULT PROTECTION WHICH COULD RESULT IN BODILY INJURY AND/OR SERIOUS EQUIPMENT DAMAGE.

**Terminals marked "test point" are intended to provide connections for operation of the optional test kit.

8.2 THE AMPTECTOR I-A TRIP UNIT

Amptector I-A trip units perform all of the functions described above for Amptector II-A trip units and in addition provide the following:

1. Optional adjustable ground fault protection with resettable operation indicator.

2. All Amptectors I-A have a trip indicator that will indicate on overload tripping and another that indicates on short circuit tripping. (All indicators are reset manually.)

Figure 62 shows the front of the Amptector I-A trip unit. A maximum of seven adjustable controls with screwdriver adjustments may be provided for setting the following characteristics:

1. Long-delay current pick-up
2. Long-delay time
3. Short-delay current pick-up
4. Short-delay time
5. Instantaneous current pick-up
6. Ground current pick-up
7. Ground delay time

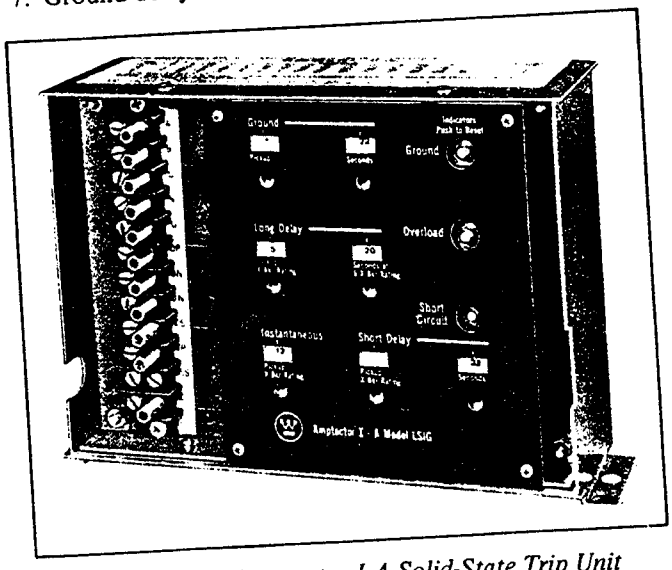

Fig. 62 *Optional Amptector I-A Solid-State Trip Unit (396707)*

Figure 63 is the Amptector trip unit with front cover removed, showing all of the calibration marks on the dials and trip indicators. The ranges of current settings in multiples of sensor rating and time delay are as follows:

1. Long-delay pick-up	.5 to 1.25 X sensor rating
2. Long-delay	4 to 36 seconds, at 6 X sensor rating

Over these ranges tripping will always occur within the time band shown on Curve No. 2, page 60. The bottom of the band is called the resettable delay. If the overload subsides in less than the resettable delay time, resetting of the Amptector trip unit will occur within a few cycles after the load drops to less than 90% of the pick-up setting.

3. Short-delay pick-up	4 to 10 X sensor rating
4. Short delay	.18 seconds to .50 seconds or 11 to 30 cycles at 60 Hz, at 2.5 X pick-up setting.

Over these ranges tripping will always occur within the time band shown on Curve No. 2, page 60. Although the time adjustment is continuous, three time bands are calibrated as shown on the curve.

5. Instantaneous pick-up	4 to 12 X sensor rating
6. Ground current pick-up	See table on top of trip unit or on Curve No. 2.
7. Ground delay time	.22 to .50 seconds 13 to 30 cycles at 60 Hz

Six different combinations of the above trip elements are provided. These combinations with the corresponding Amptector I-A model designations are as follows:

1. Long Delay Instantaneous	LI
2. Long Delay Instantaneous Ground	LIG
3. Long Delay Short Delay	LS
4. Long Delay Short Delay Ground	LSG
5. Long Delay Short Delay Instantaneous Ground	LSIG
6. Long Delay Short Delay Instantaneous	LSI

Each Amptector I-A trip unit has a terminal block equipped with test plug terminals accessible on the front of the circuit breaker front panel. This permits convenient field checking of calibrations and operation with an ex-

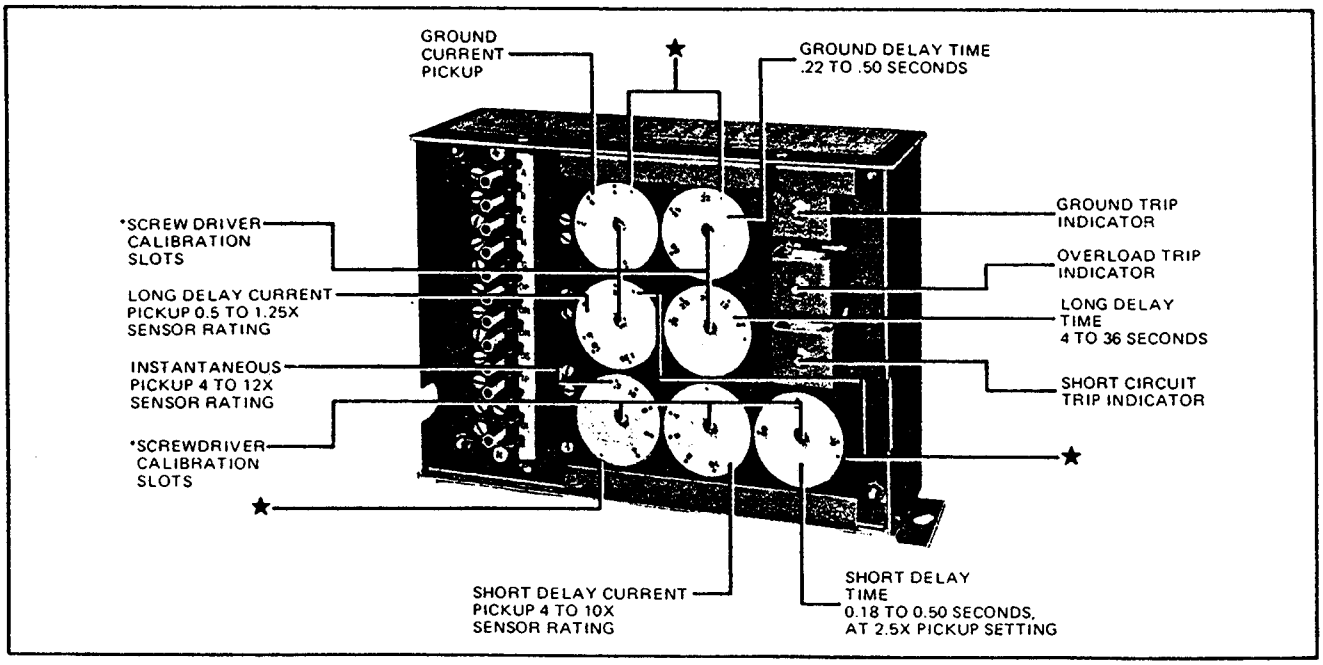

*See Section 8.4 of Text for Explanation

Fig. 63 *Amptector I-A Trip Unit with Front Cover Removed (396706)*

Application Data 32-860

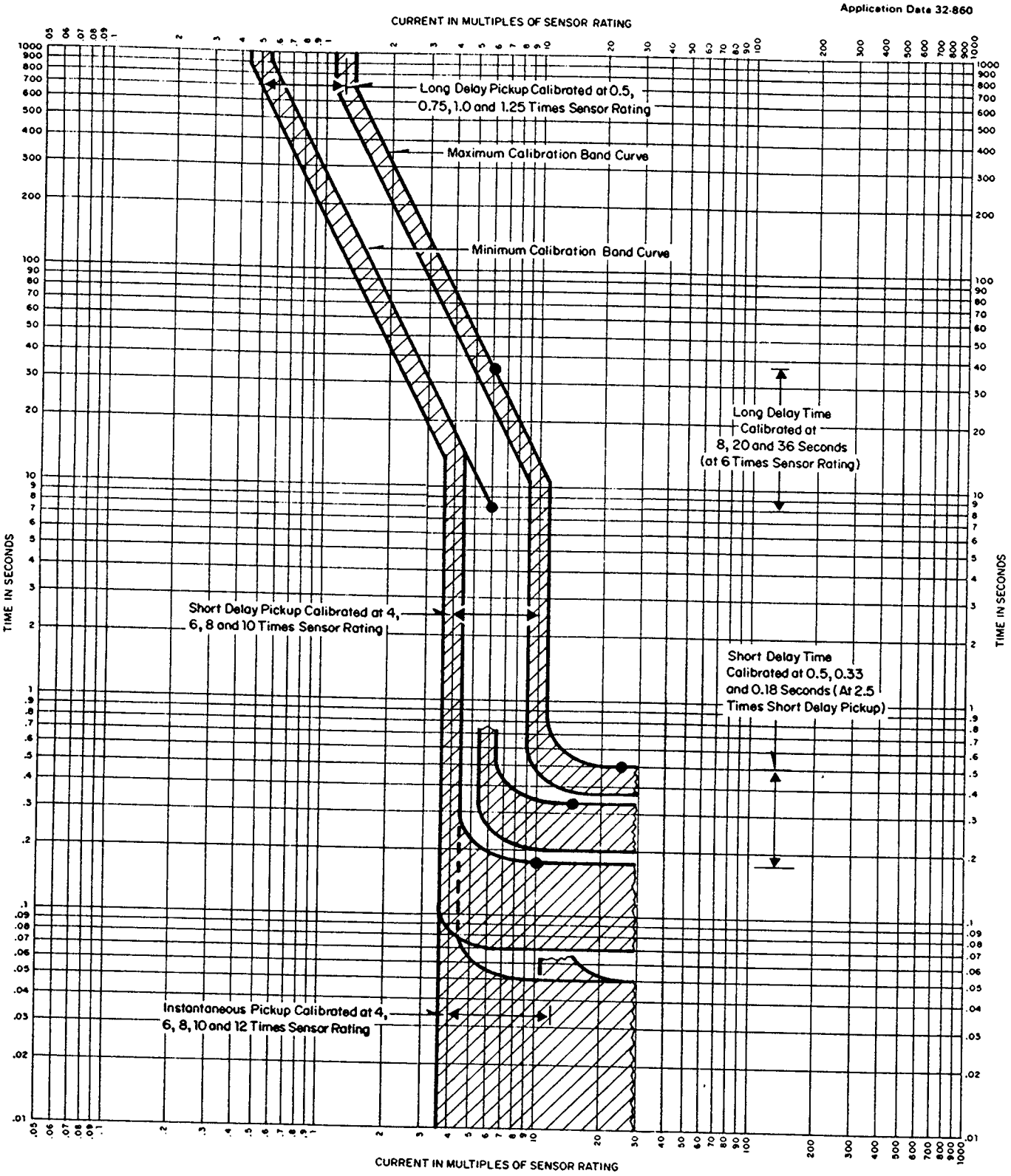

Amptector II-A
Time - Current Characteristics

Curve No. 705502
New Information
November, 1978

Curve No. 1

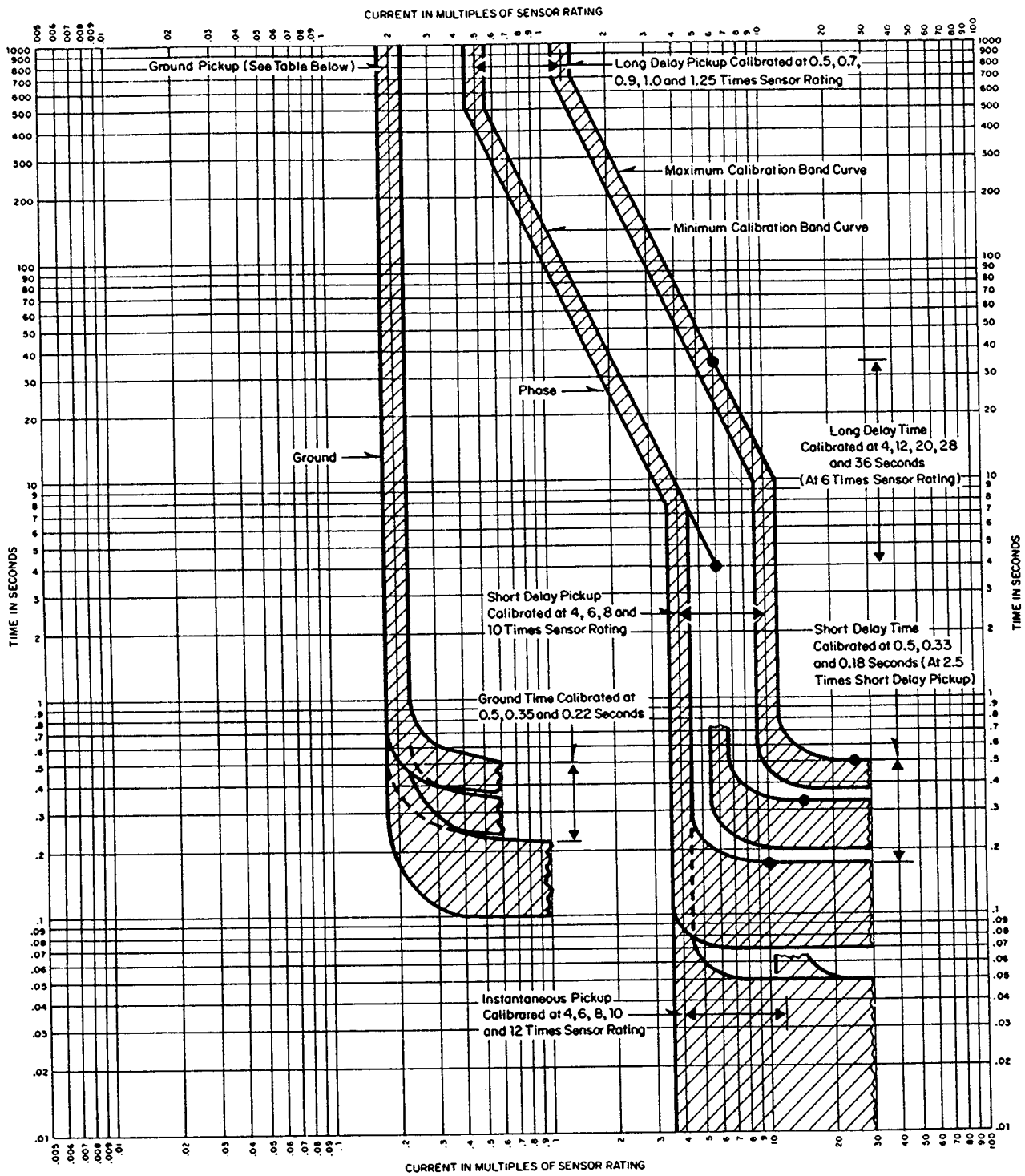

Amptector I-A

Ground Pick Up Value—Amperes

Dial Setting	Sensor Rating 50	100	150	200	300	400	600	800	1200	1600	2000	2400	3200	4000	Secondary Current †
A	13	57	60	65	80	110	145	180	260	330	400	530	640	800	1.0
B	18	67	75	85	110	150	205	260	385	505	600	770	1000	1200	1.5
C	22	75	85	100	130	185	250	325	480	625	760	960	1200	N.A.	1.9
D	33	100	120	145	200	270	385	500	730	970	1200	N.A.	N.A.	N.A.	3.0

All pick up values may vary ± 10%

† Current of this value from the secondary of an external ground transformer will cause the ground element to function. Ground element pick up can also be tested using this value. All sensors must be disconnected during test.

Amptector I-A

Time - Current Characteristics

Curve No. 2

Curve No. 705501

New Information

November, 1978

ternal power supply. A specially designed power supply test kit, with plugs to match the Amptector trip unit test plug terminals is available; and its operation is described in Section 8.7.6 of this instruction book.

Figure 59 shows a typical standard wiring diagram, which includes the Amptector trip unit terminal block. The following table explains the markings of the terminals:

A Sensor phase A

B Sensor phase B

C Sensor phase C

N Sensor neutral

G Ground

OP Output positive*

ON Output negative*

DN Test point (internal neutral)**

DS Test point**

TP Test point**

OSS High load switch signal to accessory unit

DI Test point**

*To Actuator Coil. THIS COIL HAS A POLARITY MARKING ON THE POSITIVE LEAD WHICH MUST BE OBSERVED. OTHERWISE THE BREAKER WILL NOT HAVE OVERLOAD OR FAULT PROTECTION WHICH COULD RESULT IN BODILY INJURY AND/OR SERIOUS EQUIPMENT DAMAGE.

**Terminals marked "test point" are intended to provide connections for operation of the optional test kit.

8.2.1 Ground Fault Protection

When the Amptector I-A trip unit includes ground current protection, the type of connection to the circuit must be considered. If the system neutral is grounded but the neutral is not carried with the phase conductors, the Amptector trip unit has all of the equipment necessary for sensitive ground protection.

If the system neutral is grounded and a neutral conductor is carried with the phase conductors, it is necessary to order an additional sensor, for the purpose of cancelling out any residual current in the phase conductors. This sensor must be mounted separately and must be located on the neutral conductor at the point where the neutral conductor connects to the neutral bus. These sensors are duplicate of those supplied on the breaker except for the 2400A and 3200A ratings where a modified neutral sensor is required.

The Amptector trip unit ground element may be energized from an external ground current source rather than from internally developed ground current. Such an external source could be a ring-type transformer through which all the load current conductors would have to pass. In the case of a three-phase four-wire circuit all three phase conductors and the neutral conductors would have to pass through the transformer. The sensitivity of the ground element for this kind of arrangement would depend on the ratio of the transformer used.

The ground current pick-up dial on the Amptector I-A trip unit has alphabetic calibration markings. The actual ground current corresponding to these calibrated points varies with the rating of the sensor being used. These pick-up values are printed on the top of the trip unit box.

The "Ground Trip Indicator" is a metal plunger located at the upper right corner of the trip unit. If the trip unit has functioned due to a ground fault, this plunger will protrude through the faceplate of the unit. The indicator is reset by pushing in on the plunger. If it is not reset before placing the breaker back in service, the trip unit will function normally but there will remain a false indication.

Overload Trip Indicator – Functions due to overload currents less than short delay or instantaneous pick-up.

Short Circuit Trip Indicator – Functions due to fault current in excess of short delay or instantaneous pick-up.

8.3 MAKING CURRENT RELEASE (DISCRIMINATOR)

All Amptector trip units which do not have instantaneous trip elements (Amptector II-A model SE and Amptector I-A models LS and LSG) are provided with a "making current release" which is referred to as a "Discriminator". This is a circuit in the trip unit which determines at the time of a fault whether or not there has been any current flow in the primary circuit previous to the fault. If there has been no measurable current flow previous to the fault, indicating that the circuit breaker is just being closed (or possibly that a switching device ahead of the

breaker has just been closed) and if the primary current flow exceeds approximately twelve times the sensor rating, the trip unit will function instantaneously. If the "Discriminator" circuit determines that there has been a measurable current flow prior to the fault, the instantaneous operation will not occur and the normal short time delay element will take over to delay tripping. The purpose of this unique tripping concept is that selectivity and continuity of service in un-faulted sections of the system can be maintained if there is any need, but if there is no previously operating load on the circuit, the instantaneous function takes over to limit extensive damage which might occur due to a delayed tripping operation.

8.4 SERVICING OF AMPTECTOR TRIP UNIT

The Amptector trip unit is the intelligence of the overcurrent protection provided by the breaker. It is a device that has many solid-state components. Since the only moving parts are the adjustments, the Amptector trip unit will give long, trouble-free service. All components and connections, including the printed circuit board itself, are coated to give effective environmental protection.

In changing the Amptector trip unit settings, *the dials should be moved only by means of a small screw driver inserted through the round hole in the faceplate directly below the calibration window.* The shafts must never be rotated by applying torque directly to the dial as it has only a friction fit on the shaft.

If it is suspected that the dial has moved on its shaft, it may be checked by means of rotating the shaft counterclockwise to the limit of travel. A dot at the end of the calibration should lineup with the index mark on the faceplate. See asterisk (*) on Figures 61 and 63.

If there is any reason to suspect that the Amptector trip unit is not operating correctly IT SHOULD NOT BE TAMPERED WITH; SINCE TAMPERING COULD RESULT IN LOSS OF VITAL OVERCURRENT PROTECTION.

NOTE

Warranty on the Amptector trip unit will be void if there is any evidence of tampering.

A specially designed tester is available for checking Amptector trip unit operation without using primary current. The tester can be plugged into any convenience outlet; and will pass enough current to check any pickup calibration. Time delay calibrations can also be checked. Place drawout breakers in DISCONNECT position before performing Amptector trip unit check.

Special handling and test equipment are required to service solid-state devices. If use of the tester shows that an Amptector trip unit is not operating correctly, it is strongly recommended that a spare Amptector trip unit be used; and the questionable unit be returned to the factory for service.

8.5 ACTUATOR

The actuator receives a tripping pulse from the Amptector trip unit, and produces a mechanical force to trip the breaker. Refer to Figures 64, 65 and 24 for location and details. The actuator is made up of a permanent magnet, a disc held by the magnet, a rod acted on by a spring, a lever for tripping the breaker, and a lever for mechanically resetting the actuator. The magnet cannot pull and reset the disc against the force of the spring acting on the rod, but can overcome the spring force when the disc is in contact with the magnet pole piece. A tripping pulse from the Amptector trip unit counteracts the effect of the permanent magnet, allowing the spring to separate the disc from the magnet pole piece and move the rod to actuate the trip shaft lever. The trip shaft lever then rotates the trip shaft and trips the breaker. As the breaker opens, the left pole unit lever pin strikes the spring finger attached to the reset lever; this furnishes the assistance required to move the disc so as to close the air gap between it and the permanent magnet against the spring force. The device is reset when the disc is in contact with the magnet. If the disc is not fully reset, the trip shaft lever will hold the breaker mechanism in the trip-free condition; and the breaker cannot be reclosed.

The actuator must be replaced if it will not stay reset when the plunger has been moved to the top of its travel.

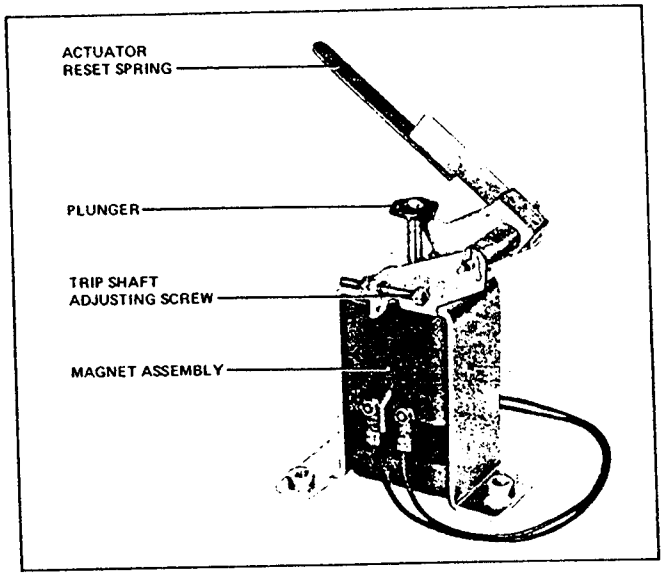

Fig. 64 *Trip Actuator (391093)*

8.6 SENSORS

The three sensors are located at the rear of the breaker on the lower studs, and directly behind the main disconnecting contacts. Refer to Figure 66. They produce an output proportional to the load current and furnish the Amptector trip unit with the intelligence and energy to trip the breaker when preselected conditions of current magnitude and duration are exceeded.

The continuous current rating for any frame size breaker can be changed simply by changing the sensors. The wide range of long-delay current pick-up available on the Amptector trip unit makes one set of sensors suitable for a number of current ratings. The Amptector trip unit setting controls are standard, and are usable with any standard sensors. If sensors are changed because of changing load conditions, etc., it is only necessary to readjust the Amptector trip unit controls to the new desired values. Available sensor ratings are listed in Table 4.

Table 4. Frame Size and Sensor Ratings

Breaker Type	Frame Size Amperes*	Sensor Ratings, Amperes**
DS-206 or DSL-206	800	50-100-150-200-300-400-400-600-800
DS-206S	800	100-150-200-300-400-600-800
DS-416, DSL-416 or DS-416S	1600	100-150-200-300-400-600-800-1200-1600
DS-420	2000	100-150-200-300-400-600-800-1200-1600-2000
DS-632	3200	2400-3200
DS-840	4000	4000

*Maximum continuous current rating for breaker.

**Amptector trip unit Long Delay Pick-up is adjustable from 50% to 125% of the sensor rating, but should not be set above 100% when using sensor rating equal to frame size.

8.7 OPTIONAL ACCESSORIES

In addition to the Amptector trip unit to provide overload protection, the following optional accessories are provided as required.

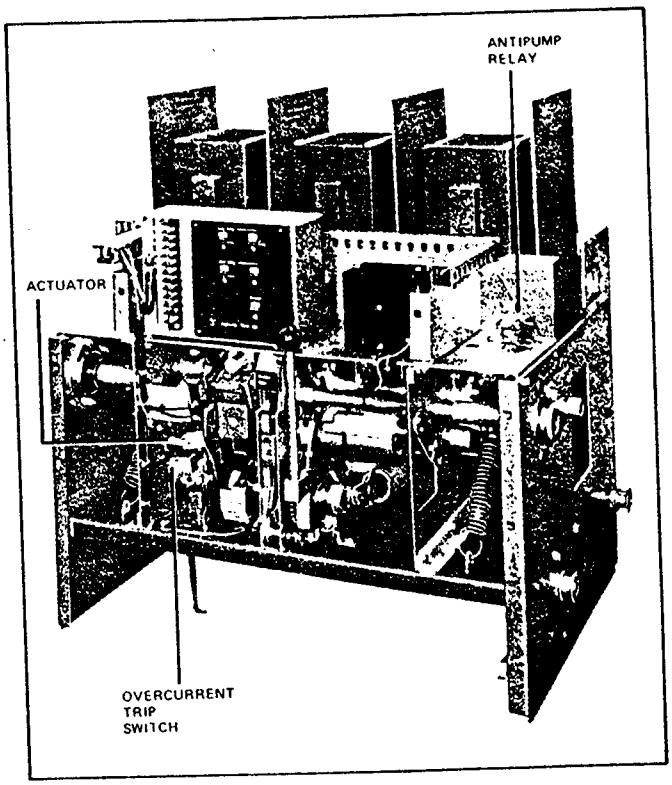

Fig. 65 *DS-840 Breaker with Front Panel Removed (391076)*

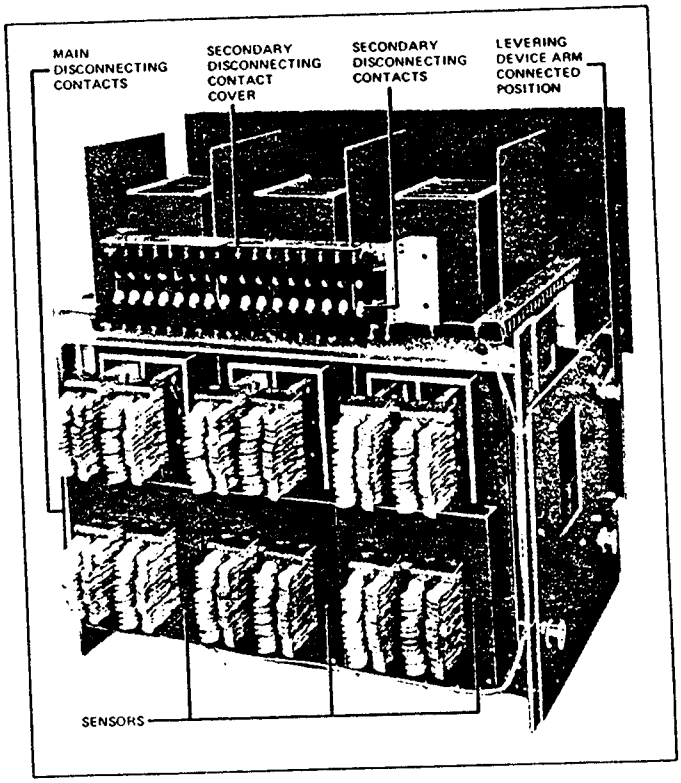

Fig. 66 *DS-840 Breaker Rear View Showing Sensors (391074)*

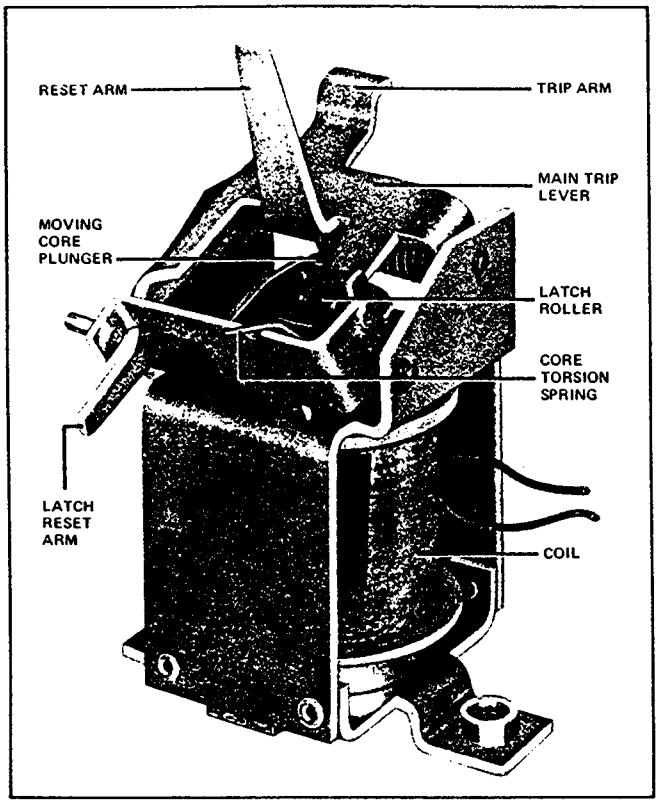

Fig. 67 *Undervoltage Trip Device (390244)*

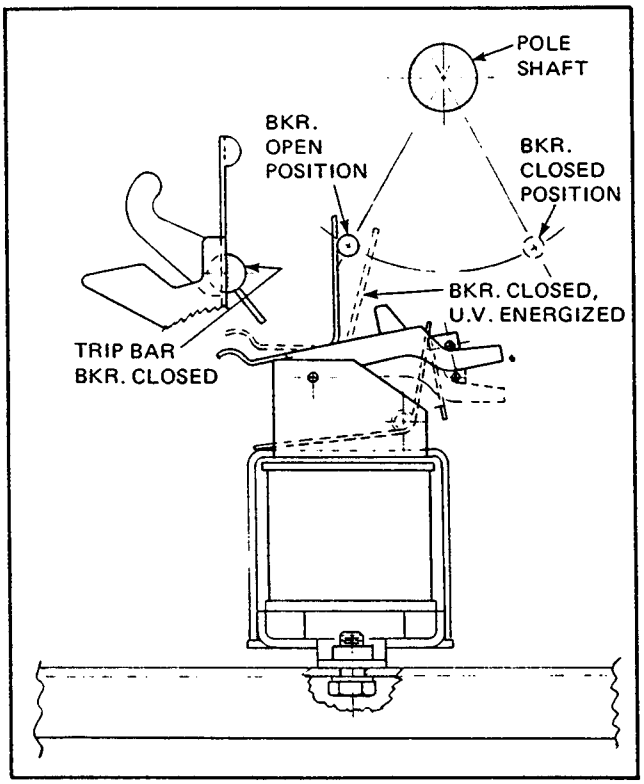

Fig. 68 *Undervoltage Trip Device Operation*

8.7.1 Undervoltage Trip Attachment

The undervoltage trip shown in Figure 67 is an electro-mechanical device that trips the circuit breaker when the voltage on its coil falls to between 30 and 60 percent of normal. The standard unit trips instantaneously. A similar device is also available with non-adjustable time delay intended to ride through momentary fluctuations of system voltage.

In operation, a moving core is normally held magnetically against a stationary core and a spring. This is linked to a latch carrying a roller which restrains the main tripping lever of this assembly.

When the coil voltage is reduced sufficiently, the torsion spring overcomes the magnetic attraction between the two cores. The moving core travels upward, and rotates the latch in a counterclockwise direction so that the roller moves from beneath the tail of the main tripping lever. A torsion spring (not visible in Figure 67) around the pivot pin of the tripping lever then rotates it in a counterclockwise direction, causing a projection on the right side of this lever to strike a pin in the breaker mechanism trip shaft, and rotate the latter in a clockwise direction to trip the breaker.

As the breaker opens, a pin on the left pole unit shaft strikes a vertical leg (Reset arm) of the undervoltage tripping lever and rotates it counterclockwise against its torsion spring. Another arm on the tripping lever resets the roller latch and the moving core. A slight amount of overtravel on the trip latch insures positive resetting under all conditions. Set Figure 68 for the relationship of the undervoltage trip device, pole shaft and trip shaft.

Always connect the undervoltage coil on the line side of the breaker unless the attachment is equipped with a time delay device. In this case, the time delay will delay tripping of the breaker long enough to permit energization of the undervoltage coil from the load side. Do not use an auxiliary switch contact in this circuit.

8.7.2 Overcurrent Trip Switch

This device is available as an optional accessory on either manually operated or power-operated breakers of all ratings. Its function is to provide a signal to indicate that the breaker has tripped open by action of the Amptector trip unit due to phase or ground overcurrent. Normal tripping by the trip plate, shunt trip device, undervoltage trip device, etc. does not cause it to operate. It is mounted on and operates from the trip actuator of the breaker.

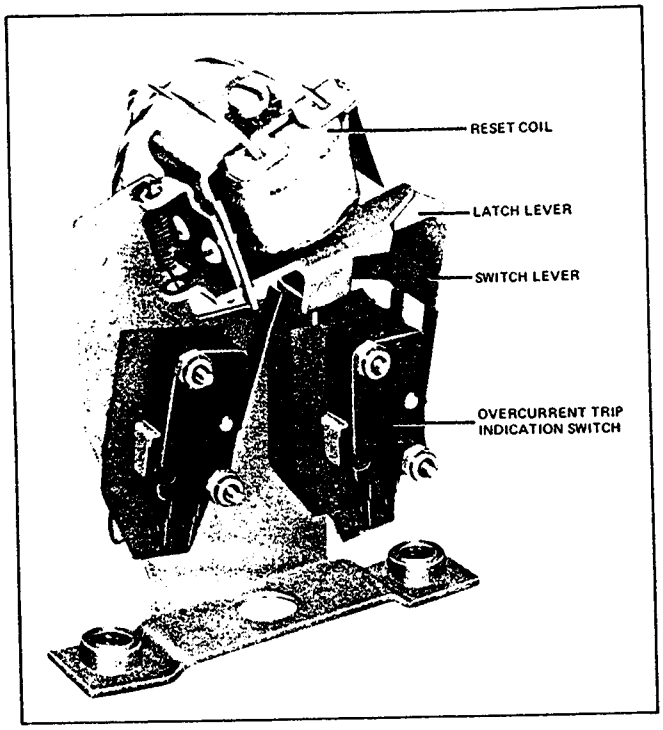

Fig. 69 *Overcurrent Trip Switch (390239)*

Three contact arrangements are available as standard: (1) two normally open, (2) two normally closed, or (3) one normally open and one normally closed contact. These are independently wired to secondary disconnect contacts at the rear of the breaker unit. Some special units may have one or two additional contacts.

The device is latch-type and must be manually reset by means of a pushbutton on the breaker front panel. Also available is an electric reset for remote operation. Figures 69 and 70 illustrate an electric reset device.

8.7.3 High Load Switch (available with Amptector I-A only)

This is a self-resetting solid-state device which picks up on an overload condition at a lower pick-up value than the breaker overload trip setting of the Amptector trip unit. Its function is to give advance notice of an overload condition before the breaker trips. See Figure 71.

The pick-up point is adjustable from 60% to 100% of the Amptector trip long delay pick-up setting. The non-adjustable time delay of 60 seconds requires that the pick-up current be maintained for that interval to cause the relay contact to operate. If the load current falls below the pick-up point, the timing resets in about a second. The relay has one normally open and one

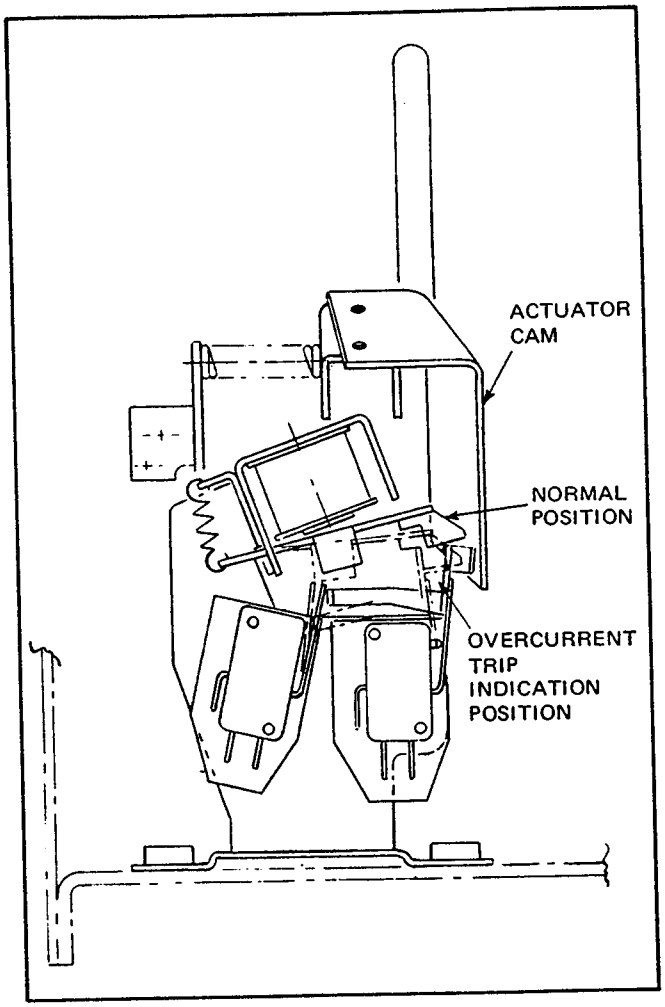

Fig. 70 *Overcurrent Trip Switch Operation*

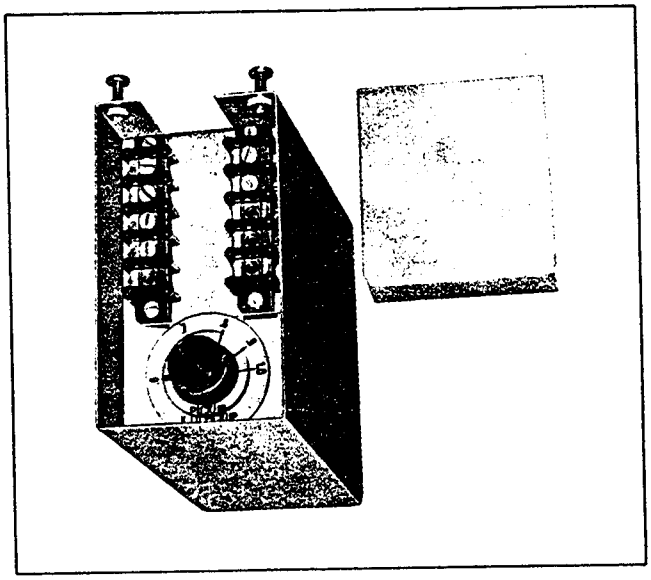

Fig. 71 *High Load Switch (391087)*

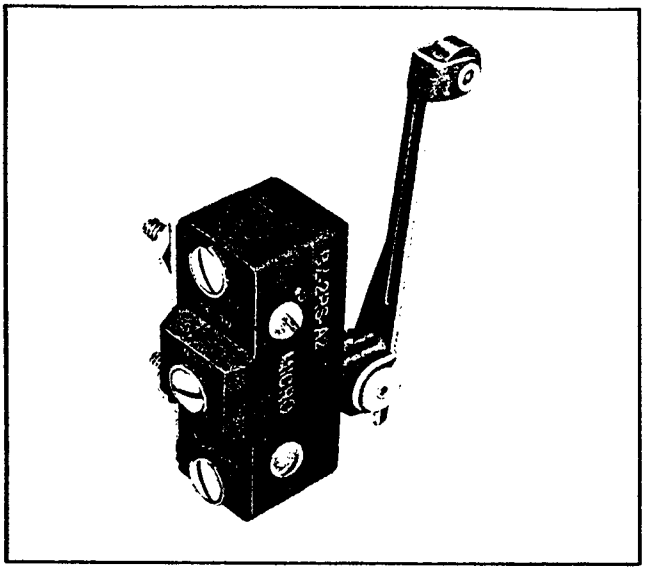

Fig. 72 *Latch Check Switch (392298)*

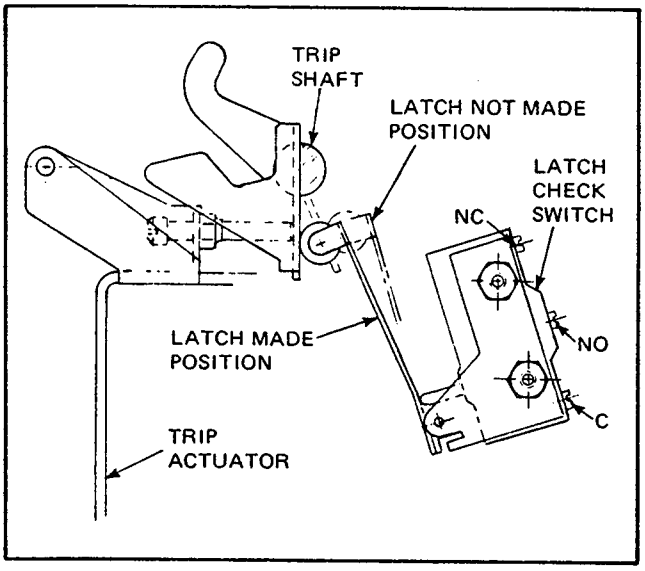

Fig. 73 *Latch Check Switch Operation*

normally closed contact with a common connection. Its built-in power supply requires a reliable sinusoidal source of either 120 or 240 volts AC.

Since this is a solid-state device, no maintenance will be required; and the same cautions apply as previously stated for the Amptector trip unit. Warranty will be void if there is any evidence of tampering.

8.7.4 Latch Check Switch

The Latch Check Switch consists of a switch mounted on the inside at the left hand side sheet of the circuit breaker. The switch is located so that when the breaker trip shaft is in the "reset" position a normally closed contact of the switch is closed. See Figures 72 and 73. When this switch is supplied, the contact is usually connected in the closing circuit of the circuit breaker to insure that the tripping system is reset before the circuit can be energized to close the breaker.

8.7.5 Auxiliary Switches

As shown in Figure 65, there may be from one to three auxiliary switches located to the right of the Amptector trip unit. Each switch has four contacts, which may be either normally open or normally closed. See Figure 74 for construction. Auxiliary switch contacts are rated 10 amperes at 120/240 volts AC, 10 amperes at 125 volts DC, and 2 amperes at 250 volts DC.

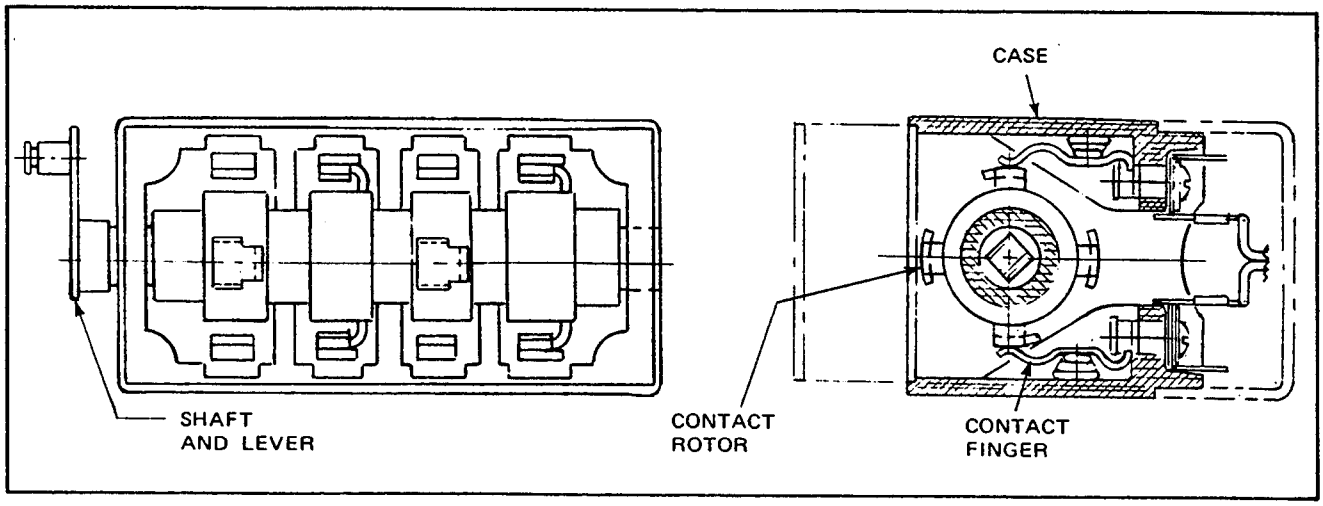

Fig. 74 *Auxiliary Switch Construction Details (PRE-1989)*

8.7.6 Amptector Trip Unit Test Kit

8.7.6.1 General

The Amptector Trip Unit Test Kit consists of an external power supply, current measuring device, and a precision timer for field checking the operation of the unit. These three functions have been combined into a single portable device housed in a convenient carrying case. It is powered from a standard 120 volt, single phase, 60 Hz outlet; and will furnish the high secondary currents to the input of the Amptector unit to simulate primary fault conditions on the circuit breaker.

8.7.6.2 Description

A long flexible cable terminated by an 11 prong polarized plug connects to the test terminals of the Amptector trip unit. A second cable connects to the source of input power. Figures 75 and 76 show the tester and operating controls. The ammeter is dual range and controlled by the "Hi-Lo" switch. In the low range it reads 0-8 amps, while the high range covers 0-80 amps. The timer reads in seconds with the right hand digit (white) in tenths of seconds. An external ammeter may be connected in the output circuit through the terminals designated for this purpose and the shorting link removed.

CAUTION

When using the Test Kit, the breaker MUST NOT be in the connected position because breaker will be tripped and cause disruption of service. It may be in either the test or disconnected position, or removed from its compartment.

8.7.6.3 Operation

The complete testing and calibration of the Amptector trip unit by means of the Test Kit is covered by the instruction sheet (I.L. 33-791) included with the Test Kit.

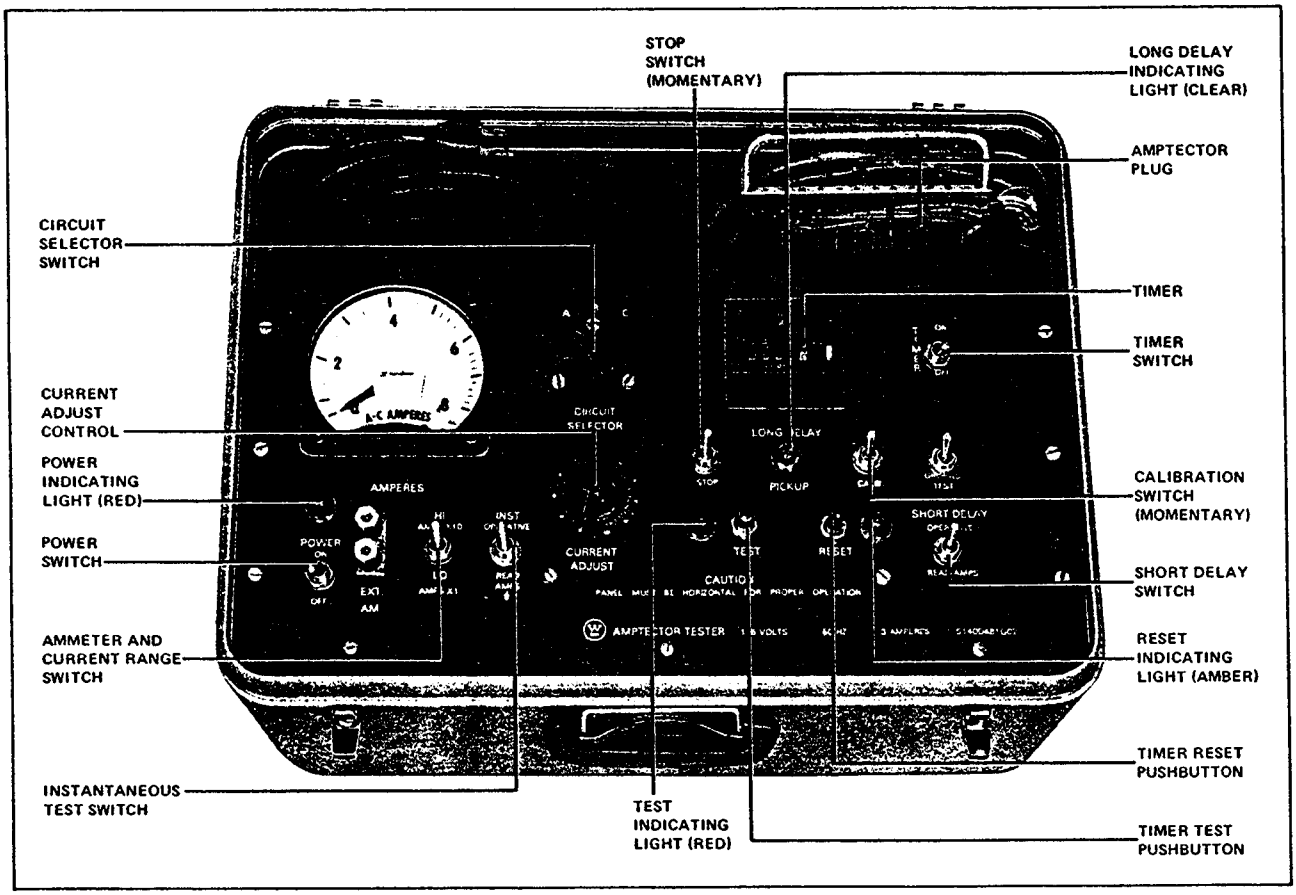

Fig. 75 *Amptector Trip Unit Test Kit (For Amptector I-A and II-A) (391672)*

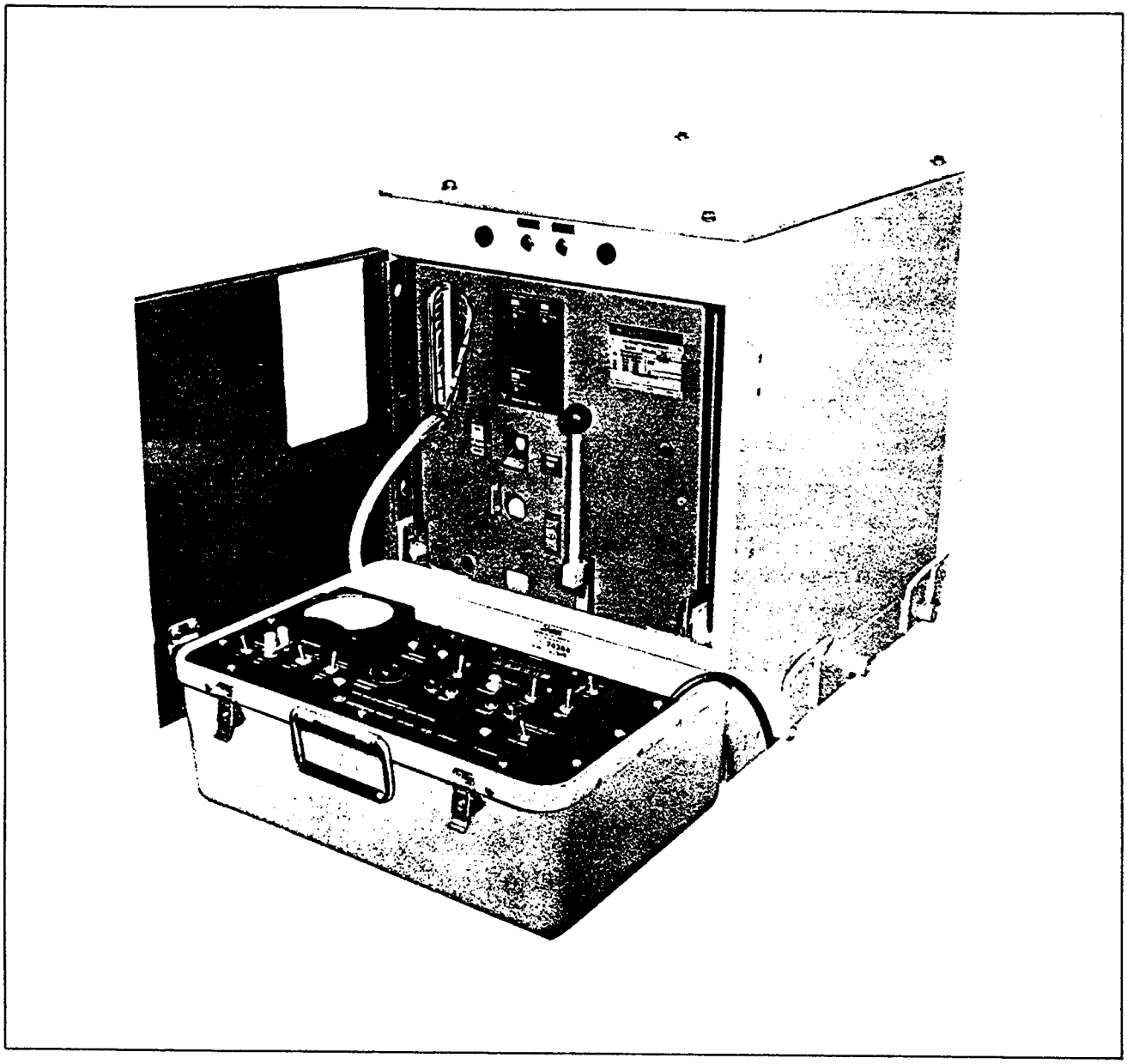

Fig. 76 *Test Kit in Operation (384826)*

Section 9 - DSL Circuit Breakers and Fuse Trucks

9.0 GENERAL

DSL circuit breakers are coordinated combinations of standard DS circuit breakers and integrally mounted series connected current limiters. They are available in two frame sizes, DSL-206 and DSL-416. The primary purpose of the current limiters is to extend the interrupting rating of the DS circuit breaker up to 200,000 amperes RMS symmetrical current. If the current limiters are sized per Table 5, the circuit breaker will function and interrupt the routine fault currents. Infrequent high faults will be cleared by the limiter. The limiters protect the circuit breaker on faults above the rating of the breaker. The limiters will blow below the circuit breaker short-time rating if the fault currents equal the system maximum capacity.

In some applications the current limiters will be sized smaller than necessary for protection of the DSL circuit breaker in order to provide protection for downstream equipment. When this is done, the current limiters will blow on fault currents which could have been satisfactorily interrupted by the basic circuit breaker.

Type DS-3200 and DS-4000 fuse trucks provide for separate mounting of Class L current limiting fuses on drawout trucks for use in series with DS-632 and DS-840 circuit breakers respectively. This separate mounting is made necessary by the size of the Class L fuses and their high temperature characteristics.

9.1 DSL CURRENT LIMITERS

Available current limiter ratings and their recommended applications are listed in Table 5. Do not replace limiters with sizes other than permitted by the table. Westinghouse DSL current limiters have been tested and approved by Underwriters Laboratories, Inc. for use in DSL circuit breakers when applied according to Table 5. They are not electrically or physically interchangeable with current limiting fuses of any other design.

The current limiters are held in place in an extension provided on the back of the circuit breaker. This extension makes the DSL circuit breakers eight inches deeper than the corresponding DS circuit breakers. See Figures 77, 78 and 79. The current limiters can only be removed from the circuit breaker and replaced when the circuit breaker is removed from its associated compartment. For this reason there is no fixed mounted version of the DSL circuit breakers.

Table 5 - Sensor and Limiter Ratings

Breaker Type	Sensor Rating	ϕ Recommended	Limiter Ratings *Minimum	**Maximum
DSL-206 DSL-206	800A 600A	1600A 1200A	1200A 800A	2000A 2000A
DSL-206	Less than 600A	1200A	125% or more of sensor rating	2000A
DSL-416	1600A	3000A	3000A	3000A
DSL-416	1200A	2500A	2000A	3000A
DSL-416	Less than 1200A	2000A	125% or more of sensor rating	3000A

ϕMinimizes nuisance blowing of limiters
*Use only when current limiting is required for downstream equipment. If long delay pick-up is set above 100%, minimum limiter ratings should not be used.
**Highest rating that will protect breaker.

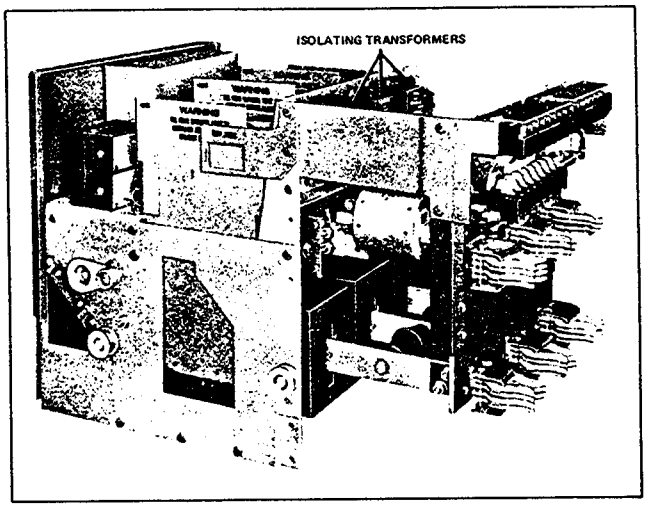

Fig. 77 *DSL-206 Breaker Side View (388138)*

9.2 BLOWN LIMITER INDICATOR

The Blown Limiter Indicator provides a visual indication on the front of DSL circuit breakers when a current limiter in any phase has interrupted a short circuit. It also insures that the circuit breaker will be tripped when any current limiter has blown, to prevent single phase power being applied to a three-phase load. See Figure 80.

This device consists of three solenoids, each connected in parallel with one of the limiters. When a limiter is blown, the resulting voltage across the open limiter causes

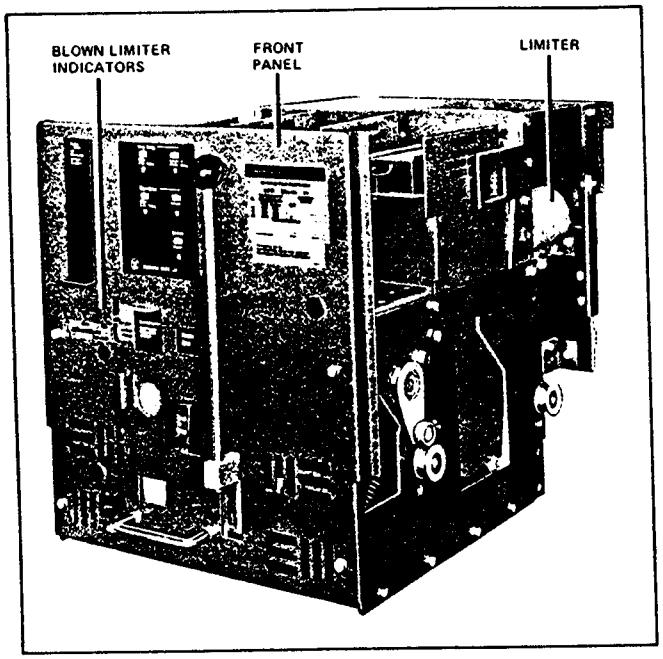

Fig. 78 *DSL-206 Breaker Front View (DSL-416 Similar) (388445)*

the associated solenoid to operate, tripping the circuit breaker mechanically and extending an indicator through the front cover of the circuit breaker. See Figure 78. The indicator will remain extended and the breaker will be held trip-free until the reset button is pushed. If the device is reset and the breaker reclosed on an energized circuit before the blown limiter is replaced, the breaker will be immediately reopened and held trip-free. The solenoids are isolated from the primary circuit voltage by three transformers located above the limiters. See Figures 77 and 79.

9.3 FUSE TRUCKS

DS-3200 and DS-4000 Fuse Trucks provide drawout mounting for Class L current limiting fuses when installed in type DS switchgear. These drawout trucks physically fit in the same compartments as the DS-632 and DS-840 circuit breakers respectively. They are moved in and out of the compartment using a similar levering mechanism as provided on the DS circuit breakers. See Figures 81 and 82.

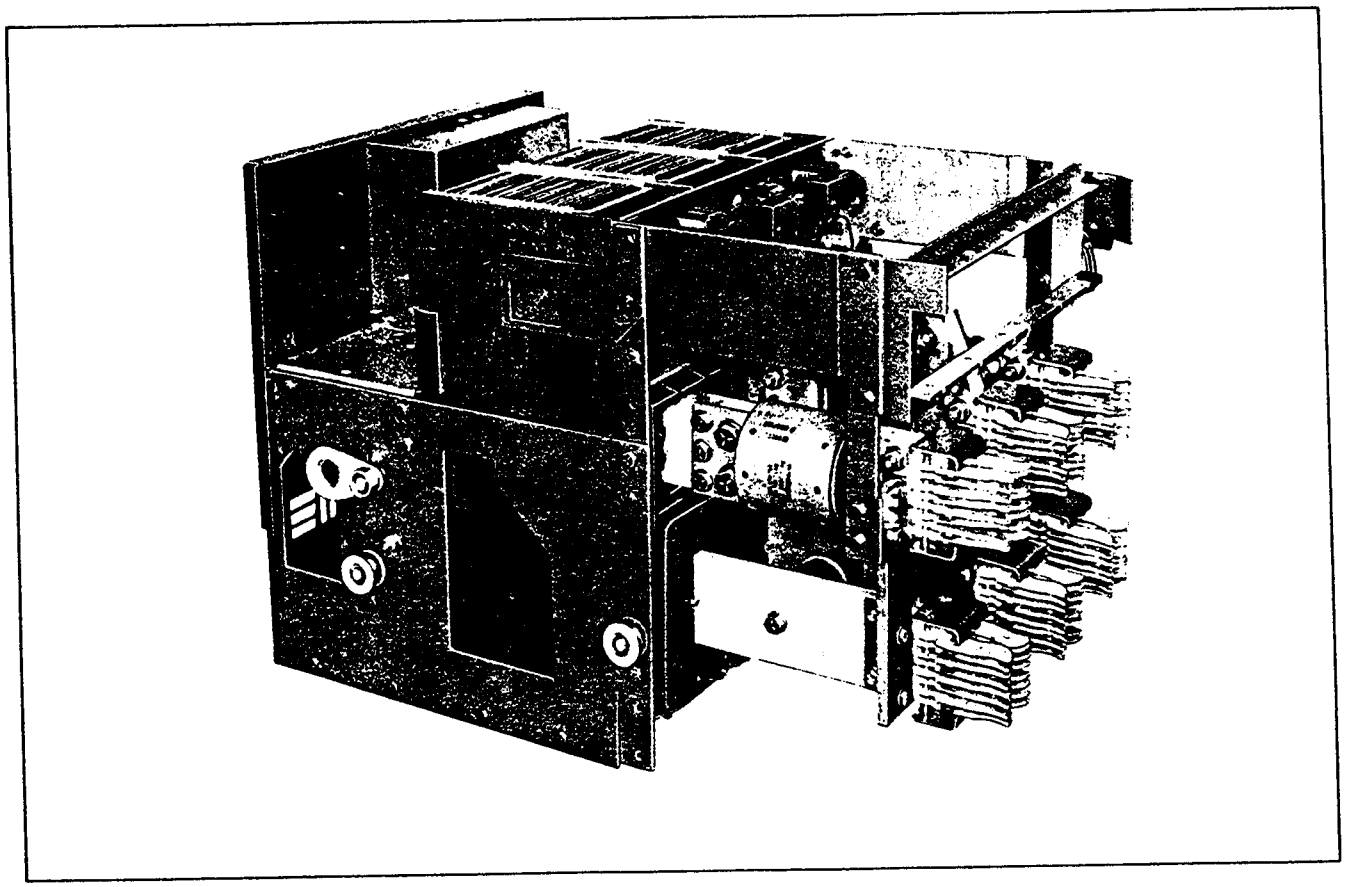

Fig. 79 *DSL-416 Breaker Side View (391073)*

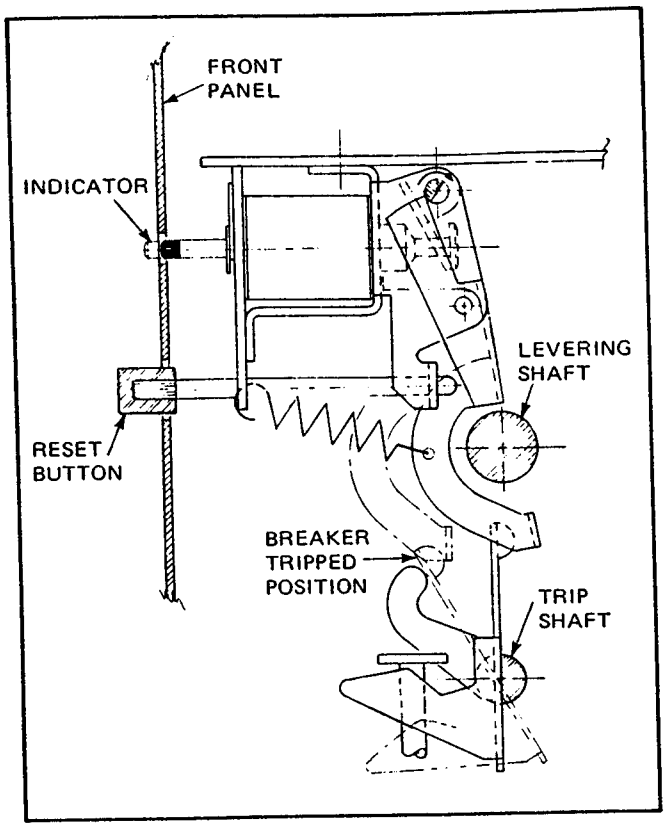

Fig. 80 *Blown Limiter Indicator*

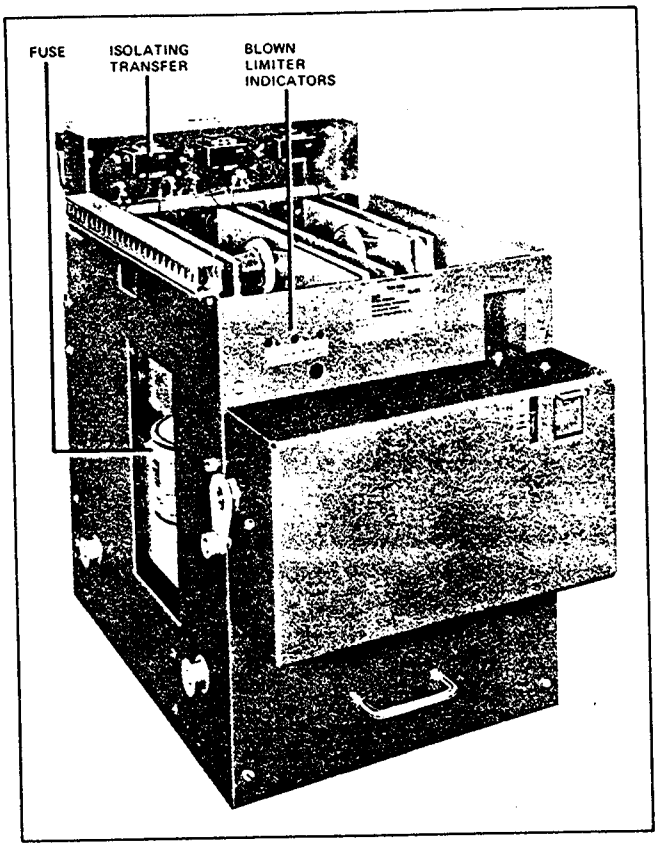

Fig. 81 *DS-3200 Fuse Truck Front View (391081)*

9.3.1 Installing Fuse Trucks

The fuse truck is normally installed in series with a circuit breaker of the same current rating. When this is done the fuse truck should be in the circuit ahead of the circuit breaker in order to provide maximum protection of the equipment. The fuse truck must never be permitted to close the current circuit or to open it when levering the truck in or out of the cell, because the primary disconnect contacts are not designed for this service. For this reason a key interlocking system is always provided which prevents opening of the fuse truck door unless the associated circuit breaker has been opened, pulled out and held in essential disconnected position. This key interlock is installed on the door of the fuse truck compartment, not on the fuse truck itself.

9.3.2 Replacing Fuses

Westinghouse type NCL fuses are normally provided when the fuse truck is built unless otherwise specified. However, any Class L current limiting fuse of the proper current rating can be used as a replacement.

After the fuse truck has been withdrawn from the compartment, the fuses can be removed by unbolting them from the conductors on the fuse truck. This is a relatively uncomplicated procedure on the DS-4000 fuse truck because there is sufficient working space within the truck. However, because the DS-3200 fuse truck is more restricted in space it will facilitate the operation if the front cover and levering mechanism is first removed from the truck. See Figure 83.

After replacing fuses, be sure that all connection bolts are tight and that any truck parts removed in the process have been replaced.

9.3.3 Blown Fuse Indicator

The same Blown Fuse Indicator is provided on fuse trucks as on DSL circuit breakers. However, since there is no opening mechanism on fuse trucks, it cannot serve directly as an anti-single phase device. In order to perform this function, the Blown Fuse Indicator is arranged to mechanically operate a switch, which is wired to secondary contacts on the fuse truck. The switchgear assembly wiring must be arranged to connect this switch into the tripping circuit of the associated circuit breaker. See Figure 83. Again, the indicator must be reset after being operated to reset the switch; or its contact will prevent the breaker from being closed.

WARNING

FOR PROTECTION AGAINST SINGLE-PHASING, THE CONTROL POWER FOR TRIPPING THE CIRCUIT BREAKER MUST BE FROM A RELIABLE SOURCE.

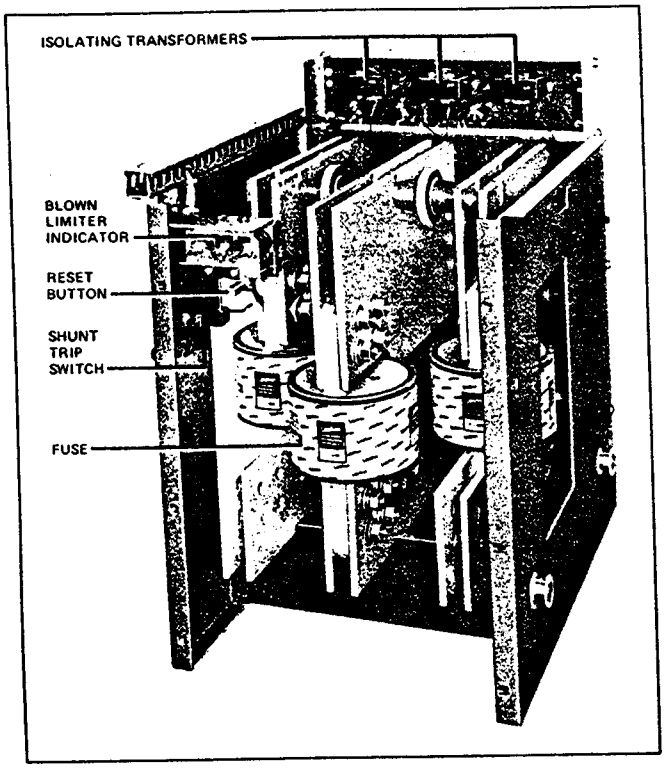

Fig. 82 *DS-3200 Fuse Truck with Front Cover Removed (391078)*

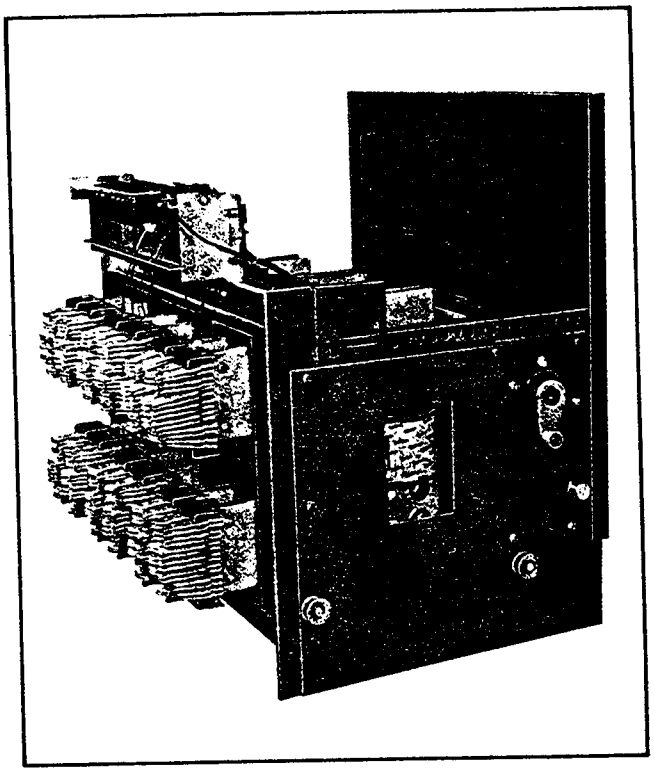

Fig. 83 *DS-4000 Fuse Truck Side View (391677)*

Section 10 - Fixed Breakers

10.0 GENERAL

Fixed Breakers differ from the drawout version in that they do not have levering device, primary disconnects and secondary disconnects. They do have padlock feature to hold the breaker in "trip-free" position. Key interlock mounted in the location of levering device may also be supplied to insure proper sequence of operation between two or more breakers. This insures that before the interlock key can be removed to be used in another location the circuit breaker must be opened and held in trip-free position. The breaker stabs have holes for bolting to the bus connections. Terminal blocks mounted at the back of the breaker are used as secondary contacts. The frame is modified so that the breaker can be mounted on the panel.

Section 11 - Drawout Dummy Elements

11.0 GENERAL

A dummy element consists of a drawout frame or truck with disconnecting contacts and with connecting links between the upper and lower terminals on each pole. When inserted into a compartment it bridges the upper and lower stationary disconnecting contacts in each phase, and is thus equivalent to an isolating disconnecting switch.

It must be emphasized that a dummy is not a breaker, and has no current breaking ability whatsoever; therefore, it is almost invariably key interlocked with a breaker or other load interrupting device, to insure that it will be isolated or at least carrying NO current before it can be levered out to the disconnected positions.

Dummy element requires the same size compartments as those of equivalent type DS breakers of the same frame sizes. The key interlock is of the same type and operates in the same manner as that described in Section 9 for type DS-3200 and DS-4000 drawout fuse trucks.

Section 12 - Inspection and Maintenance

12.0 GENERAL

Type DS circuit breakers are "top of the line" equipment. This means they are manufactured under a high degree of quality control, of the best available materials and with a high degree of tooling for accuracy and interchangeability of parts. Design tests show them to have durability considerably beyond minimum standards requirements. All of these factors give the DS line of breakers high reliability. However, because of the variability of application conditions and the great dependence placed upon these breakers for protection and the assurance of service continuity, inspection and maintenance checks on them should be made on regular schedules.

Since maintenance of these breakers will consist mainly in keeping them clean, the frequency of maintenance will depend to some extent on the cleanliness of the surroundings. If there is much dust, lint or other foreign matter present obviously more frequent maintenance will be required.

WARNING

BE SURE CIRCUIT BREAKER CONTACTS ARE OPEN AND SPRINGS DISCHARGED BEFORE DOING MAINTENANCE WORK. FAILURE TO DO SO COULD CAUSE BODILY INJURY.

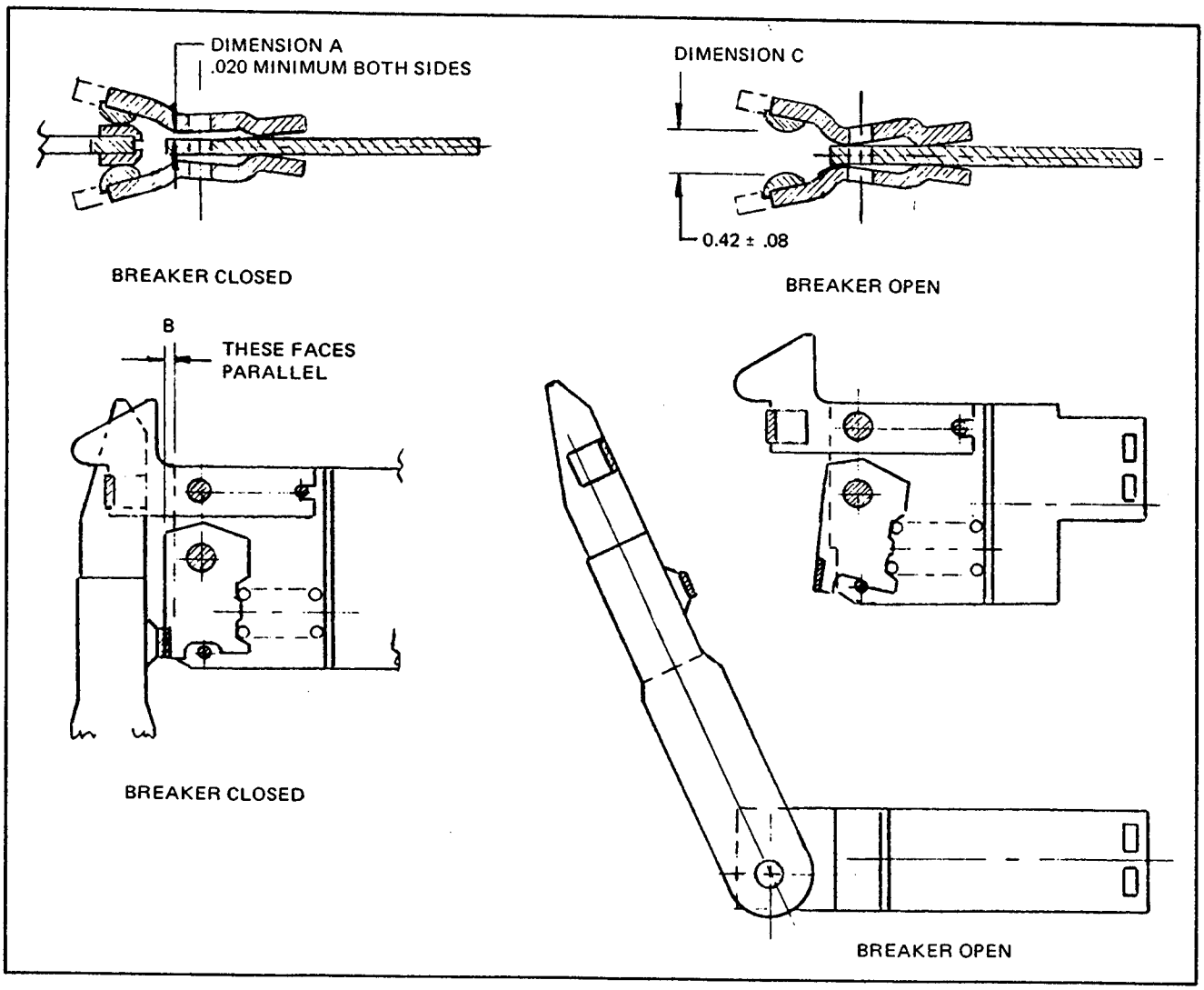

Fig. 84 *Contacts and their Adjustment, DS-206 Breaker*

12.1.1 When to Inspect

Industry standards for this type of equipment recommend a general inspection and lubrication after the number of operations listed in Section 12.3.1 of this instruction book. This should also be conducted at the end of the first six months of service if the number of operations has not been reached.

After the first inspection, inspect at least once a year. If these recommended inspections show no maintenance requirements, the period may be extended to a more economical point. Conversely, if the recommended inspection shows, for instance, heavy accumulations of dirt or other foreign matter that might cause mechanical, insulation or other electrical damage, the inspection and maintenance interval should be decreased.

When a breaker opens a heavy fault, at or near its rating, give it a visual inspection withdrawn from the compartment and with insulating barriers and arc chutes removed.

12.1.2 What to Inspect

First withdraw the breaker from the compartment. Remove barriers. Remove arc chutes. If there is a deposit

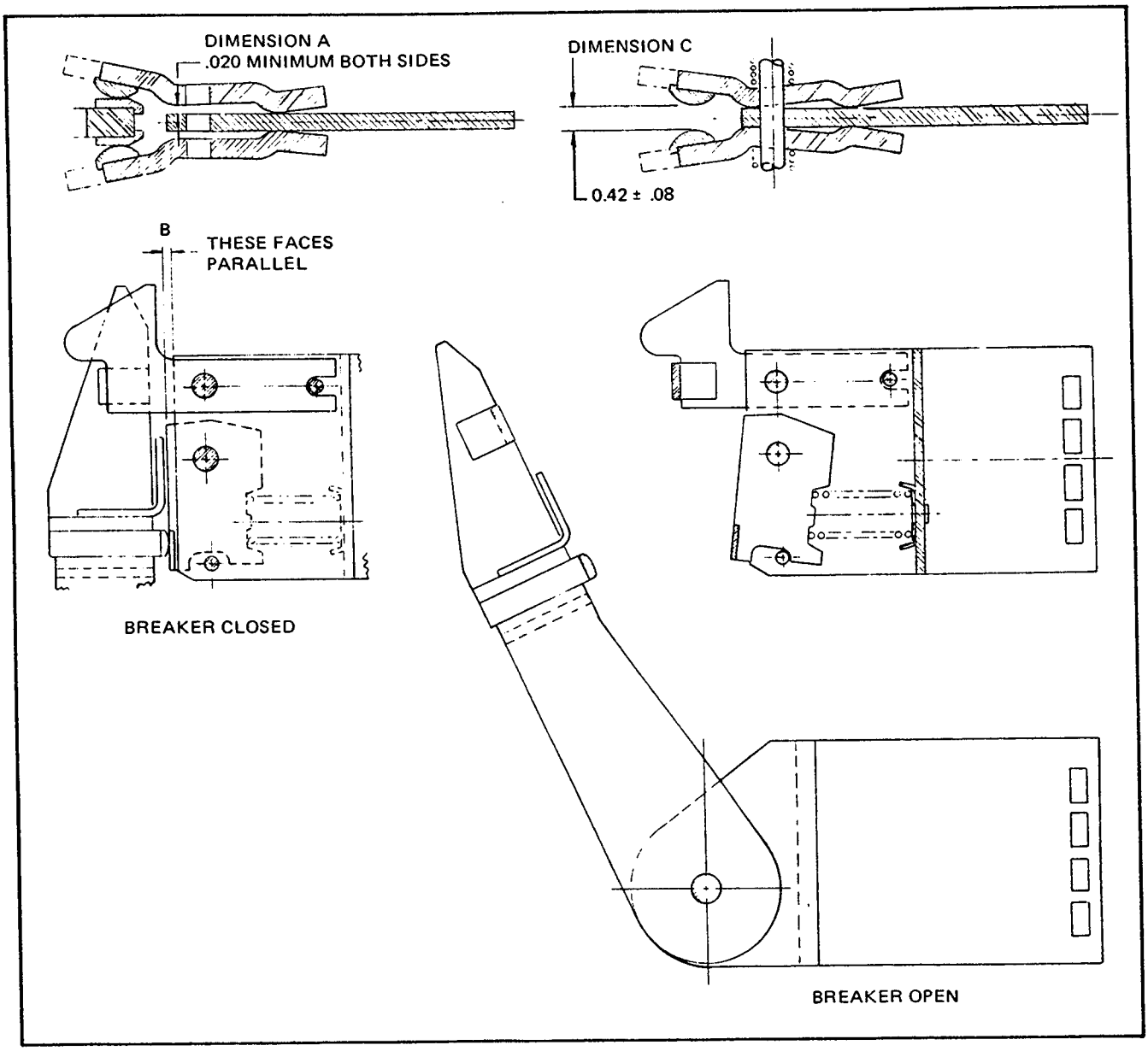

Fig. 85 *Contacts and their Adjustment, DS-416/420 Breaker*

)f dust, blow clean with compressed air, if available. Wipe ıccessible areas with a clean dry cloth. Inspect contacts.

NOTE

Switching and fault interruptions and the making of motor inrush currents will cause some pitting of the breaker contact parts. A large accumulation of operations will give the contacts, especially the arcing contacts, a mottled, dirty, eroded appearance. This appearance is the normal result of arc burning and in itself is no cause for concern.

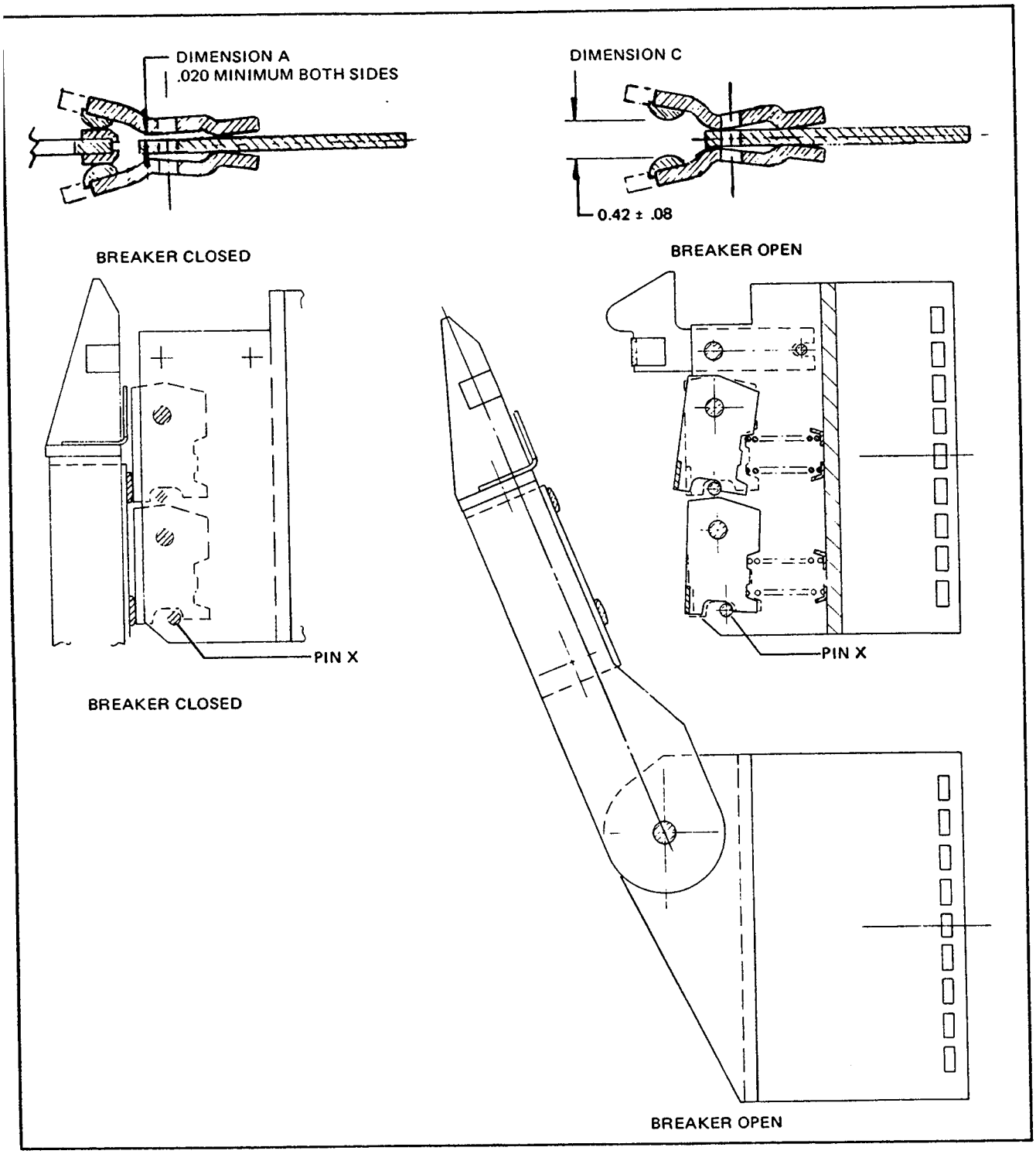

Fig. 86 *Contacts and their Adjustment, DS-632 Breaker*

12.1.2.1 DS-206, DS-206S, DS-416, DS-416S and DS-420

Remove the barriers and the arc chutes to expose the contacts:

With the breaker open, examine the contact tips of moving and stationary arcing and main contacts. If the tips are burned or worn more than .030", the contacts must be replaced. Also check the dimension (C) between the stationary arcing contacts (Figures 84 and 85). It should be .42 ± .08. If this dimension is not maintained, the stationary arcing contacts must be replaced.

Close the breaker and check the contact engagement according to Figures 84 and 85. The main stationary contact fingers should be parallel (B) to the fixed contact cage. If not, adjust the contacts according to 12.2.3. Also check the dimension (A) between the stationary arcing contacts and the center section of the cage. If this dimension is not .02 inches or greater, the stationary arcing contacts should be replaced.

Replace the barrier and the arc chutes after inspection is completed.

NOTE

The DS-206 adjustments and maintenance apply completely to the DS-206S. Also, the DS-420 instructions cover the DS-416S.

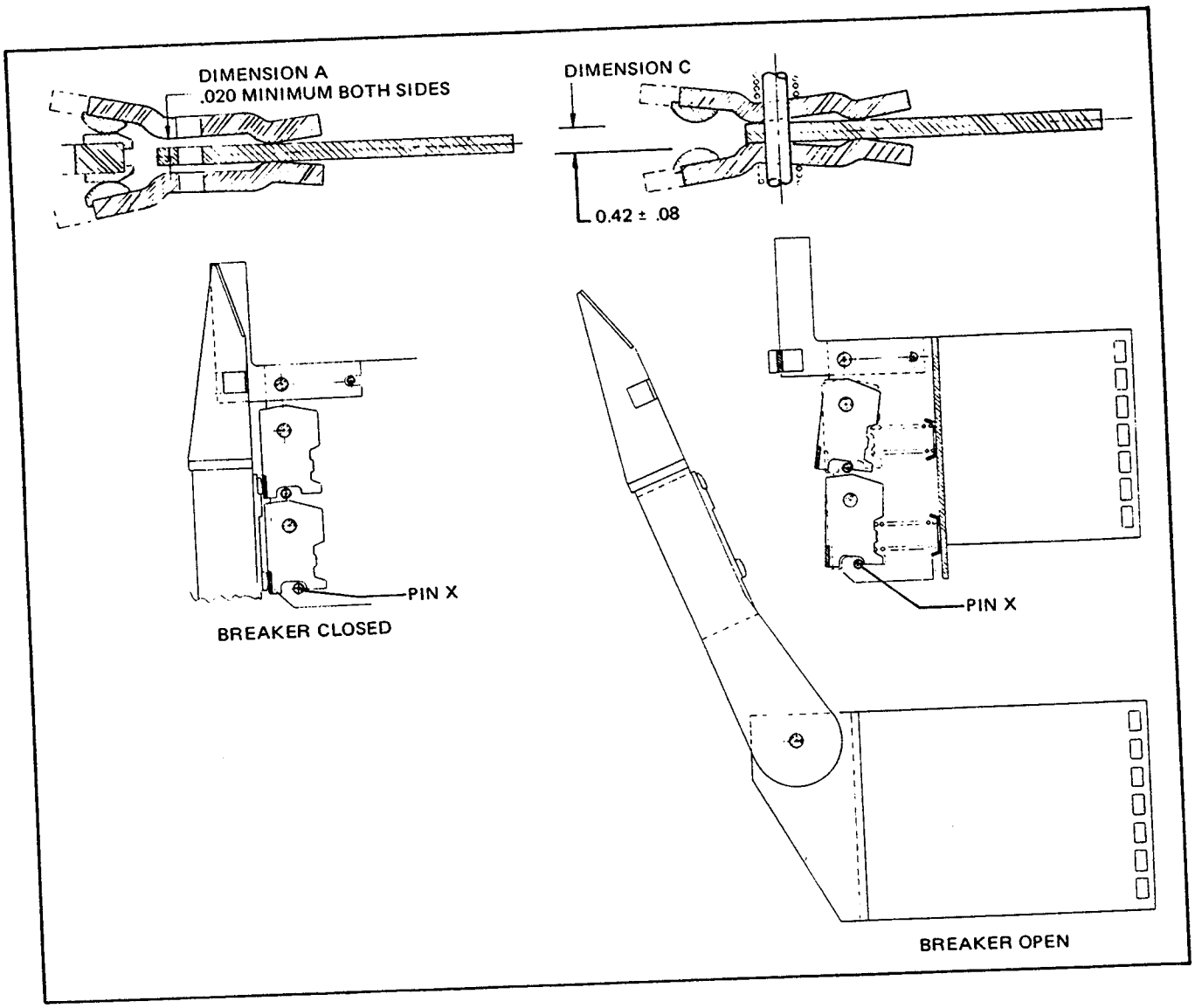

Fig. 87 *Contacts and their Adjustment, DS-840 Breaker*

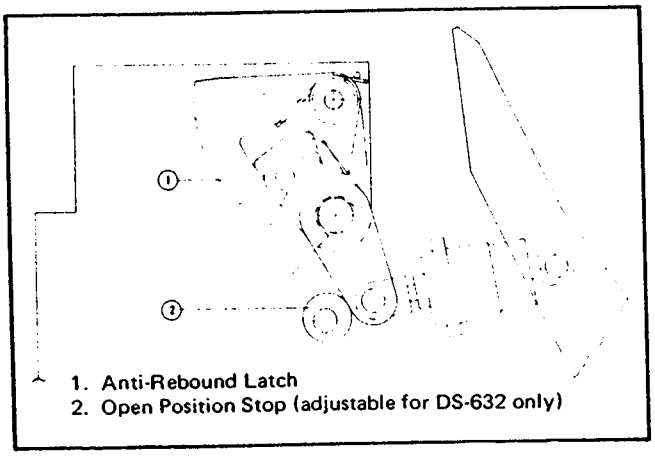

Fig. 88 *Open Position Stop and Anti-Rebound Latch*

To replace the stationary contacts, the disconnect fingers on the rear are removed and then the two bolts holding the upper contact assembly to the molded base. Withdraw the contact assembly from the front. This should be replaced with a new contact assembly. Make sure that all bolts are securely tightened. Close the circuit breaker and check all contact dimensions as described in Section 12.1.2.

12.1.2.2 DS-632 and DS-840

In addition to the requirements for the DS-206, DS-206S, DS-416, DS-416S and DS-420 above:

The lower main fixed contacts should be inspected to ensure that they have adequate contact pressure. This is determined by pin "X" being free to slide in the contact cage (See Figures 86 and 87). Unlike DS-206/DS-416/DS-420 breakers, the top row of fixed main contacts are compressed beyond parallel position to assure adequate contact pressure for lower row of fixed main contacts.

12.1.3 Replacement of Contacts

12.1.3.1 DS-206

Both moving main and arcing contacts are held between the two moving arms by two bolts with self-locking nuts. Removal of the two bolts permits the replacement of the moving contacts. These bolts must be securely tightened after replacement.

The fixed arcing contacts are held by a single bolt passing through the contacts and their pressure springs. On reassembly the self-locking nut is tightened so that a dimension of 3.12 inches is obtained between the inside surfaces of the flat washers on the spring ends.

12.1.3.2 DS-416, DS-416S, DS-420, DS-632 and DS-840

The moving arcing and main contacts are secured to the moving contact assembly by two bolts. Removal of these bolts permits the replacement of the moving contacts.

To change the fixed arcing and main contacts, the fixed contact assembly must first be removed from the pole unit. Remove the disconnect fingers, remove the screws holding the contact assembly to the pole unit base and withdraw the contact assembly.

Obtain a new or reconditioned assembly and reassemble in the pole unit, with the holding screws finger tight. Close circuit breaker and check the dimensions A (Figures 85, 86 and 87); they should be approximately equal. If not, trip breaker and adjust fixed contact system until alignment is obtained. Tighten screws and contacts as described in 12.2.3.

12.1.4 Arc Chutes

The V-shaped slots in the arc chutes will undergo slow erosion with arc interruptions. Switching operations will give them a pitted, mottled and sooty appearance. This is normal. Heavy fault interruptions will cause greater arc erosion.

If the steel splitter plates have more than 1/4 inch of material eroded away at the top of the V-shaped slots, arc chutes should be replaced. This can be determined by comparing a plate near the center with a plate near the end.

12.1.5 General Inspection

Look over all visible parts possible for missing pin retainers, loose nuts, bolts or screws, bent, worn or damaged parts. Make appropriate corrections to anything found out of order.

After any inspection make sure all parts are properly installed on the breaker, especially arc chutes and all four barriers.

12.1.5.1 Power Operated Mechanisms

Examine the driving face of the oscillator pawl. Refer to Figures 15 and 16. Normal operation of the spring charging mechanism will result in the removal of plating from the face of the pawl.

However, if the face is chipped, distorted or broken, it should be replaced. Use Kit 694C525G01.

12.2 FACTORY ADJUSTMENTS
(Required for Major Overhaul Only)

The type DS circuit breakers are designed and built with very few adjustable parts. The operating parts and frame mounting parts are accurately tool made for automatically accurate assembly relationships. The parts are made of material that are affected to the minimum by repeated operations and normally encountered atmospheric temperature and dirt conditions.

There are a few adjustments, made at the factory and subjected to quality control inspection and test. These factory settings normally can be expected to hold for the life of the breaker.

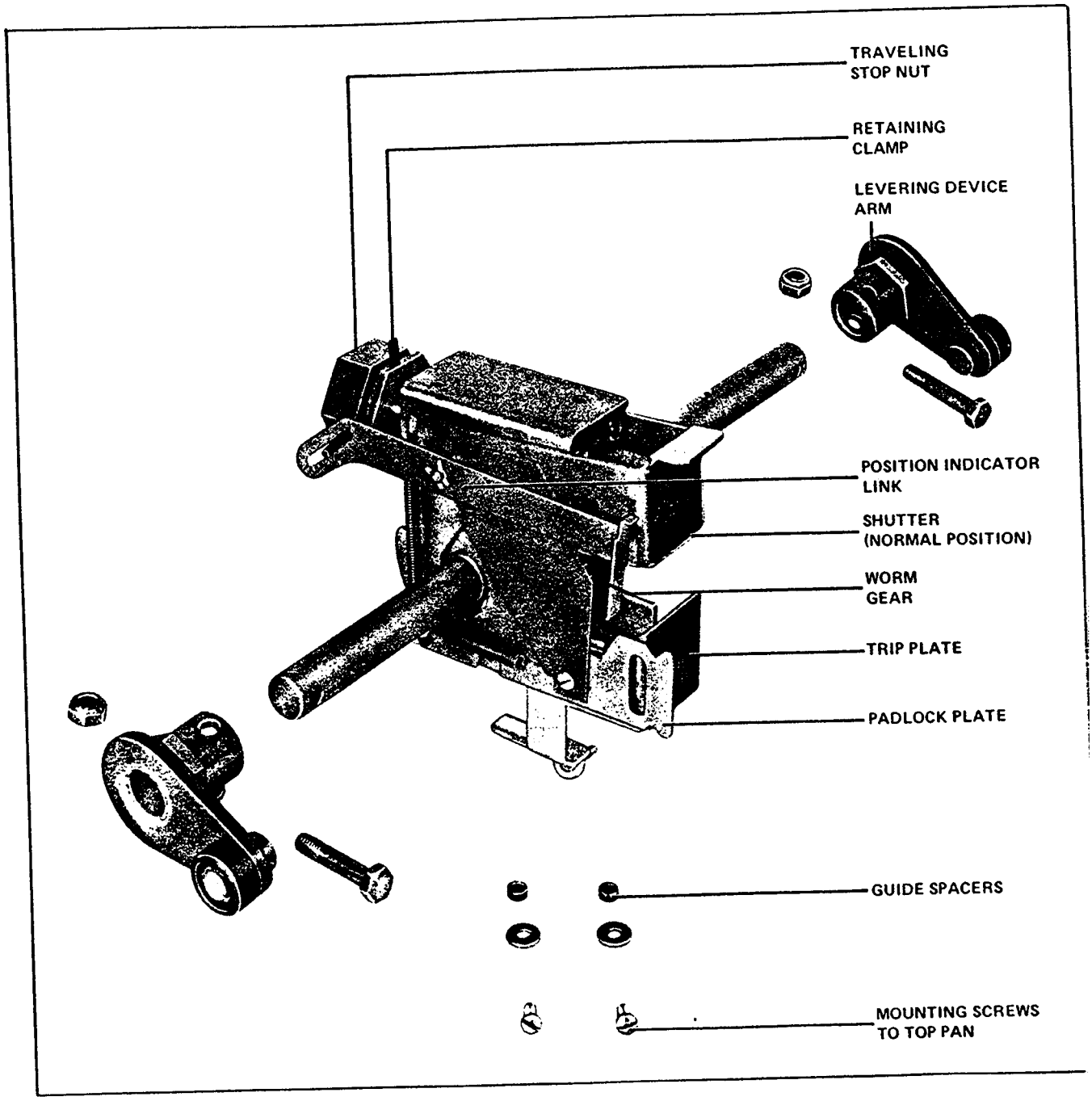

Fig. 89 *Levering Mechanism (384021)*

Factory settings are adjustments which should only be necessary when parts are reassembled after dismantling. These are described in Sections 12.2.1 and 12.2.2.

Maintenance adjustments should be made as indicated on maintenance inspections and are described in Section 12.2.3.

12.2.1 Trip Latch Overlap

Figure 23a shows a composite view of the shunt trip lever and the trip latch, as described in Section 5.1.6. The angular position of the trip shaft latch surface is adjustable in relation to the trip latch surface by means of a screw located in the top of the actuator frame. (Figure 23b).

Proper adjustment procedure is as follows:

Close the breaker

Slowly rotate adjusting screw clockwise until the breaker trips. This is "no overlap" position.

Rotate adjusting screw 4 turns in a counterclockwise direction.

12.2.2 Breaker Open Position Stop (DS-632 Only)

Proper Adjustment Procedure is as follows:

Refer to Figure 88

With the breaker open, loosen the open position stop bolt nuts so that the eccentric cylinders can be turned by hand but will stay put.

Rotate the cylinders to obtain a clearance of approximately .005 in. between the cylinders and the stop levers. Tighten nuts on bolts.

12.2.3 Moving Contact Adjustment

The contact assemblies are adjustable for the amount of engagement only. The lead of the arcing contacts over the main contacts is fixed. The correct engagement of the contacts is achieved when the vertical faces of the main fixed contacts and the fixed contact cage are parallel.

For the DS-206 this is obtained by the adjusting nuts located on the insulating link stud above and below the pivot block. Refer to Figures 37 and 38. These nuts are self-locking, and must be tight when the adjustment is complete.

The moving pole of the DS-416/420 is adjusted by rotating the insulating link after the lock nut has been loosened. Refer to Figure 39. Tighten the locknut securely after the adjustment has been completed.

The DS-632 and DS-840 have two adjusting studs on each pole, and both must be moved together to retain the parallelism. Refer to Figures 43 and 45. A spring type locking clip holds the adjustment for DS-632. For DS-840 locking nuts similar to DS-416/420 hold the adjustments.

Check contact system as described in Section 12.1.2.

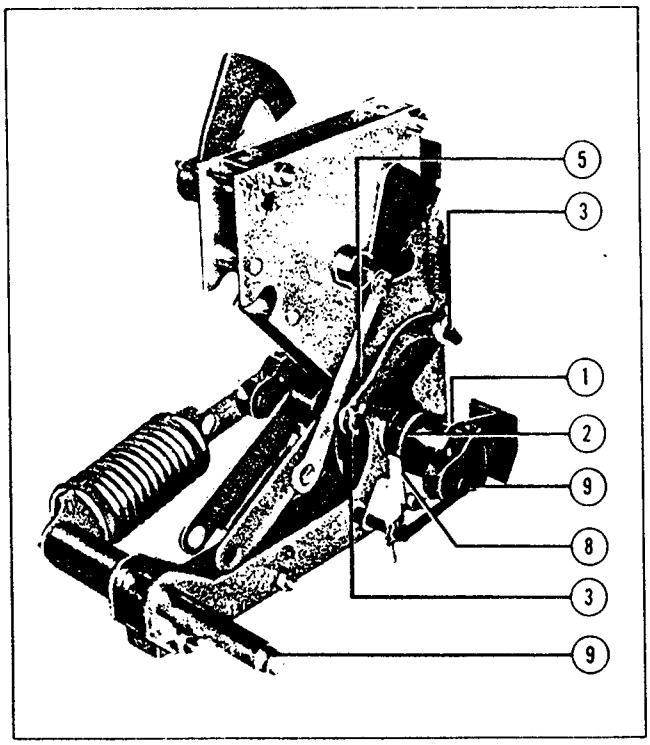

Fig. 90 *Lubrication Points on Left Side of Mechanism (383034)*

12.2.4 Levering Mechanism

The complete levering mechanism is shown in detail in Figure 89. If the traveling stop nut on the rear of the worm shaft has been removed, it must be replaced in the exact position with respect to the worm gear position for proper interlock operation. This is achieved when the threaded worm shaft bottoms in the stop nut and the interlock cam is in the connected position shown in Figure 29a. The shutter interlock pin will then drop to its normal position beneath the lobe of the cam. The retaining clamp ring also operates the position indicator and may be slipped in its groove in the stop nut. The stop nut is prevented from rotating by having a "flat" against the bottom of the breaker horizontal top pan.

When reassembling, care must be exercised to insure that the two guide spacers are located in the slots of the

top pan. This allows this mechanism to float. Screws should be tightened and then backed off 1/2 turn to allow mechanism to float.

12.3 LUBRICATION

In general, the circuit breaker requires only moderate lubrication at regular intervals. The use of a special lubricant is required in a few places, and must be applied with care. Only small quantities are needed. All excess must be removed with a clean cloth to prevent any accumulation of dust or dirt. Avoid any lubricant on insulation or other electrical parts. Care must be taken to prevent any of the molybdenum lubricant reaching any current carrying contact surface.

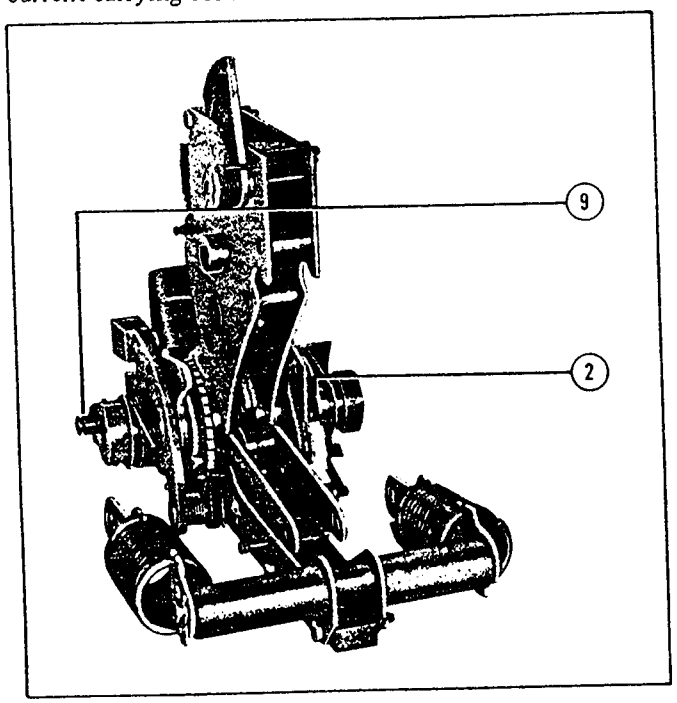

Fig. 91 *Lubrication Points on Right Side of Mechanism (385303)*

12.3.1 Frequency

Type DS-206/DS-206S breaker after 1750 operations.
Type DS-416/DS-416S/DS-420 breakers after 500 operations.
Type DS-632 and DS-840 breaker after 250 operations.

NOTE

Breakers that have been stored or have infrequent operations shall be operated a minimum of five times before being placed in service.

WARNING

FAILURE TO INSPECT, CLEAN, LUBRICATE AND MAINTAIN CIRCUIT BREAKER AT RECOMMENDED FREQUENCIES COULD RESULT IN FAILURE OF EQUIPMENT TO OPERATE PROPERLY UNDER FAULT CONDITIONS, WHICH COULD CAUSE EQUIPMENT DAMAGE AND/OR BODILY INJURY.

12.3.2 Location and Lubricant

Refer to Figures 90 and 91. The numbered references below correspond to those on the above figures.

Molykote BR-2 Plus by Dow Corning (Molybdenum Disulphide in Lithium Grease Westinghouse #53701QB) or equivalent should be used sparingly on the following surfaces.

(1) The spring-charge indicator surface engaging with the cut-off switch link.

(2) The cam surface operating the cut-off switch link.

(3) The pins on both ends of the constraining link.

(4) Shunt trip moving armature surface, Fig. 19c.

(5) The curved surface of the trip latch.

(6) Spring release moving armature surface, Fig. 19d.

(7) The trip shaft, Fig. 19c, as shown by balloons ⑦.

(8) The surface of the cut-off switch link.

(9) The main spring pins on each end of the crankshaft and fixed ends.

NOTE

All parts of the levering mechanism, Figure 89 have sufficient lubrication, and should not require any further attention.

WARNING

BE SURE CIRCUIT BREAKER CONTACTS ARE OPEN AND CLOSING SPRINGS ARE DISCHARGED AFTER COMPLETING MAINTENANCE WORK. FAILURE TO DO SO COULD CAUSE BODILY INJURY.

Section 13 - Renewal Parts

13.0 GENERAL

Renewal Parts Data, listing by name and style number the recommended renewal parts to be kept in stock, are supplied separate from this book. When ordering parts, always specify the part name and style number, if known, from the Renewal Parts Data, RP33-790-1E. If the style number is not known, refer to the Figure number, name and item number as shown in this book, along with the breaker type and shop order number or style number as shown on the nameplate on the front cover of the circuit breaker.

Some of the detail parts shown in the figures in this book will be available only as part of a sub-assembly. The detail parts in the figures are illustrated to show their function and location in the assembly; but certain parts, due to manufacturing procedures or installation procedures, are recommended and furnished as part of a sub-assembly. The renewal parts data indicates which parts are available as individual items or in a sub-assembly. When inquiring about or ordering parts, refer to the figures in this book and the renewal parts data for identification of the part or sub-assembly in question.

13.1 IDENTIFYING PARTS FOR DS-416S and DS-206S

13.1.1 DS-416S Parts

The parts of a DS-416S are almost identical to those of a DS-420. The parts shown in a proper DS-420 figure (or drawing) are used for the same purpose in Type DS-416S. Description of these parts are the same too, but they are identified as parts for DS-416S (or shop order number).

13.1.2 DS-206S Parts

The parts of Type DS-206S are very similar to those of DS-206. By reference to the proper DS-206 figure (or drawing) identification of their common parts can be made. When they are ordered for the DS-206S, it is so specified. The major differences are:

1. DS-206S uses the three piece base of the DS-416, instead of the one piece molded base of the DS-206.

2. DS-206S uses the DS-416 arc chute.

3. DS-206S main disconnects have 50% more fingers than the DS-206.

4. DS-206S has twice as many contacts and arms as the DS-206.

5. The pole unit hinge of DS-206S is a forked construction or a miniature version of the DS-416 hinge.