INSTRUCTIONS

GEH-1807B

AIR CIRCUIT BREAKERS

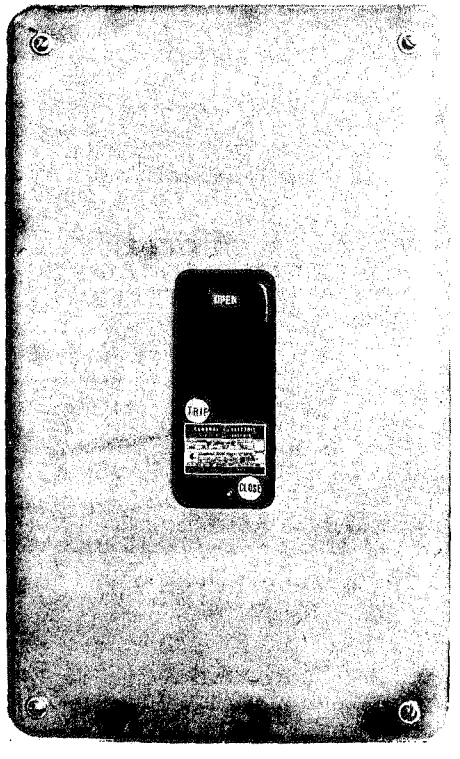

Types
AK-1-15 and AK-1-25
Electrically Operated

LOW VOLTAGE SWITCHGEAR DEPARTMENT

GENERAL ELECTRIC

PHILADELPHIA, PA.

CONTENTS

Cover (8021084)

AIR CIRCUIT BREAKERS ELECTRICALLY OPERATED TYPES AK-1-15-3 THROUGH AK-1-15-9 AND AK-1-25-3 THROUGH AK-1-25-9

INTRODUCTION

Before unpacking, installing or attempting to operate the air circuit breaker described herein, these instructions should be thoroughly and carefully read.

RATINGS

Breaker Type	Continuous Current Rating	Interrupting Rating	Voltage	
	RMS Amperes	RMS Amperes	AC	DC
AK-1-15	15 to 225	30,000	240 and below	
AK-1-15	15 to 225	25,000	241-480	
AK-1-15	15 to 225	15,000	481-600	250
AK-1-25	35 to 600	50,000	240 and below	
AK-1-25	35 to 600	35,000	241-480	
AK-1-25	35 to 600	25,000	481-600	250

These circuit breakers are generally used for protection and control of apparatus and branch circuits, including equipment in buildings, industries, power stations and for marine applications within the ratings designated.

The AK-1-15 and AK-1-25 differ in that the AK-1-25 has one extra contact per pole with corresponding difference in the upper stud and interrupter.

All of these models are essentially the same breaker. As various design improvements and new features were added, the suffix digit of the type number was progressively increased. Mainly, changes made were of a very minor nature. These are tabulated below:

AK-1-15/25-3	Basic model
AK-1-15/25-4	Improved "Y" relay in solenoid control system.
AK-1-15/25-6	Stationary primary disconnect and cable clamp redesigned. (Only enclosed breakers affected.)
AK-1-15/25-7	New type of front escutcheon and closing handle. Trip button relocated on escutcheon and reset lever of bell alarm and lockout breakers changed.
AK-1-15/25-8	EC-2 overload trip device used instead of the EC-1 device except on units requiring the short time delay feature.
AK-1-15/25-9	New drawout frame introduced.

RECEIVING, HANDLING AND STORAGE

Immediately upon receipt of the circuit breaker, an examination should be made for any damage or loss sustained in transit. If injury or rough handling is evident, a damage claim should be filed at once with the transportation company and the nearest General Electric Sales Office should be promptly notified.

The circuit breaker should be unpacked as soon as possible after being received. Care should be used in unpacking to avoid damaging any of the breaker parts. Be sure that no loose parts are missing or left in the packing material. Blow out any dirt or particles of packing material that may have accumulated on the breaker parts.

If the circuit breaker is not installed at once, it should be stored in a clean dry place and preferably placed in a vertical position. It should be supported to prevent bending of studs or damage to the breaker parts. It is advisable not to cover the breaker with any packing or other material that absorbs moisture which may cause corrosion of breaker parts. A covering of paper will prevent dust from settling on the breaker parts.

These instructions do not purport to cover all details or variations in equipment nor to provide for every possible contingency to be met in connection with installation, operation or maintenance. Should further information be desired or should particular problems arise which are not covered sufficiently for the purchaser's purposes, the matter should be referred to the General Electric Company.

INSTALLATION

Before being shipped, all breaker adjustments and settings have been carefully made and checked by experienced factory personnel. At the time of installation, it should only be necessary to observe the operation of the breaker to establish that no unobservable damage has occurred during shipment.

LOCATION

The air circuit breaker should be installed in a clean dry place where it is readily accessible for operation, inspection and proper maintenance. Special enclosures are available for the installation of circuit breakers which may be subjected to dust and moisture or other unfavorable locations.

MOUNTING

DEAD FRONT BREAKERS

Dead front circuit breakers are designed for mounting in a switchboard or an enclosing case. The mounting of dead front breakers consists in placing the breakers within the enclosed structure and connecting the power buses or cables and making the necessary control connections. The standard mounting depth from the back surface of the breaker base to the back side of the front panel is 8-3/4".

The front cover of dead front breakers consists either of a hinged door with cut-out or a plate bolted to the panel.

A terminal board on the right side of the breaker is used for making various control connections with breaker devices. An auxiliary switch on the left side of the breaker is used for some control connections and for connecting various auxiliary accessories.

The structural surface to which the breaker is bolted must be flat through-out and the supporting structure must be of sufficient strength to hold the breaker firmly in place. Minimum cut-out dimensions must be maintained in order to have proper electrical clearance.

When disconnects, Fig. 26, are used, the breaker is placed against the panel so that the disconnects fit over the stationary studs to which the power circuits are connected. Four 1/2" mounting bolts are then inserted into the holes for bolting the breaker to the panel. When disconnects are not used, the power circuits are bolted to the breaker studs after bolting the breaker to the panel by using the four 1/2" mounting bolts. Breakers mounted in drawouts or an enclosing case (see below) are equipped with disconnects.

ENCLOSED BREAKER

The enclosed air circuit breaker is shipped in an enclosing case. To install the enclosed breaker, proceed as follows:

(a) General Purpose Indoor

1. Remove cover from enclosure.
2. Remove two bolts holding breaker in place.
3. Remove breaker.
4. Mount case.
5. Make power, control and ground connections.
6. Install breaker in case and replace two mounting bolts and enclosure cover.

(b) Weather Resisting

1. Open enclosing case door.
2. Withdraw breaker (see "Weather Resisting Enclosing Case").
3. Mount case.
4. Make power, control and ground connections.
5. Insert breaker (see "Weather Resisting Enclosing Case").

CONNECTIONS

The connections to the circuit breaker studs should be firmly clamped or bolted in place to prevent excessive heating. The connecting cables or bus bars should have a current-carrying capacity sufficient to limit their temperature rise to that specified for the breakers. If these connecting cables or bus bars are not of sufficient size, heat will be conducted from them to the breaker so that the breaker cannot carry normal rated current without exceeding the specified temperature rise. Connecting cables or bus bars should be supported so that the breaker studs will not be subjected to unnecessary strains.

WIRING DIAGRAM

The wiring diagram, Fig. 1, shows a typical elementary and typical connection diagram with the breaker in the open position.

When normal voltage is supplied to the control circuit, either by closing a remote switch or by pressing the push button PB, the closing contactor X coil will become energized through contacts bb (1-2) and Y (4-3). The X contacts will close, sealing in the X coil through contact X (1-2) and energizing the breaker closing coil through contacts X (3-4), X (6-5), and X (7-8). The breaker will then close, thereby opening the bb contact and closing the aa contact of the prop switch. Prop switch bb contact will open the circuit through the X contactor coil, thus de-energizing the breaker closing coil through contacts X (3-4), X (6-5), and X (7-8). Prop switch aa contact will cause the permissive relay Y coil to become energized providing contact is maintained on the closing switch. The Y relay will also open the circuit of the X contactor coil, thereby providing an anti-pump feature.

Operating the remote trip switch with the breaker closing will cause the shunt trip coil become energized and will trip the breaker. The trip impulse is interrupted by an "a" contact of the auxiliary switch.

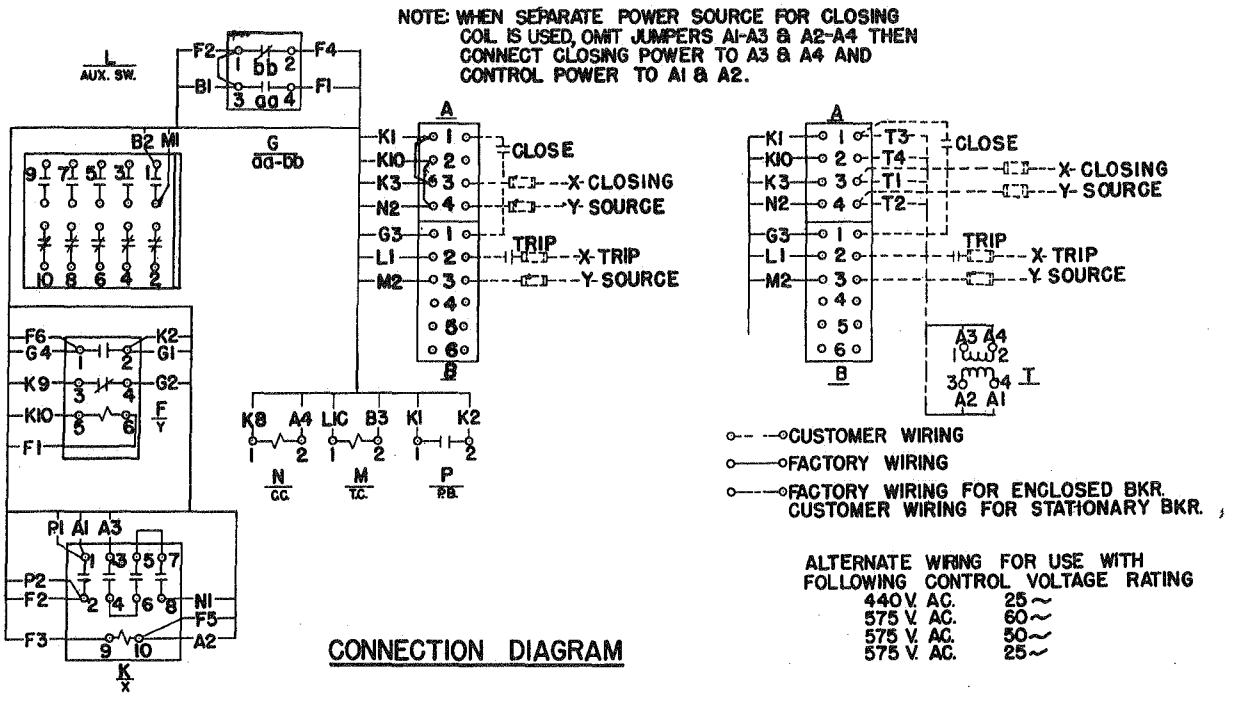

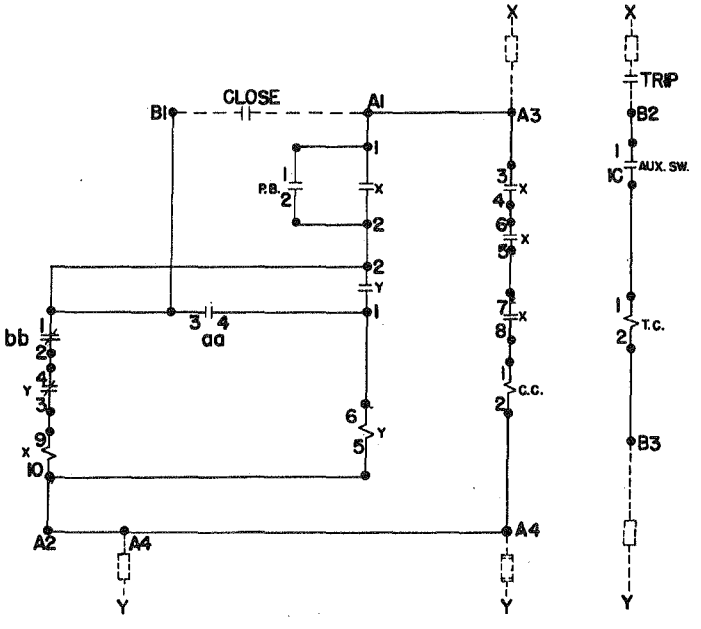

LIST OF ABBREVIATIONS

A-TERMINAL BOARD LOCATED TOP RIGHT, FRONT VIEW.

B-TERMINAL BOARD-LOCATED UNDER-A.

F-ANTI-PUMP, PERMISSIVE RELAY.

G-(aa-bb)-MECHANISM SWITCH.

K-(X)-CLOSING CONTACTOR-3 SETS OF CONTACTS IN SERIES (MAIN) & 1 SET FOR SEAL-IN.

L-(AUX. SW.)-AUX. SW.-2"a" & 2"b" CONTACTS (STD.) OR 5"a" & 5"b" (SPECIAL).

M-(T.C.)-SHUNT TRIP DEVICE.

N-(C.C.)-SOLENOID CLOSING COIL.

P-(P.B.)-CLOSING SWITCH ON BREAKER.

T-TRANSFORMER.

Fig. 1 (215D185)

Fig. 1 Wiring Diagrams

OPERATION

MANUAL

The breaker can be furnished with or without a manual operating handle. Breakers which are equipped with a pistol grip operating handle may be closed by rotating the handle 90° in the clockwise direction. Breakers which do not have a pistol grip operating handle are closed by means of a manual maintenance handle. The correct use of the maintenance handle is shown in Fig. 2. Use of the handle in an upside-down position can result in damage to the breaker parts and should be avoided.

If the escutcheon (9) Fig. 3 has been removed from the breaker, the maintenance handle can no longer be used. However, the breaker still may be closed manually by inserting a screw driver in the position shown in Figs. 5 and 5A, and then rotating its handle upwards and towards the rear of the breaker.

The breaker may be tripped manually by means of the trip button or automatically by any of the trip devices with which it is equipped.

ELECTRICAL

The breaker is closed electrically by means of a push button, located on the front of the breaker, or by a remote switch. When the closing contact is made the x contactor becomes energized, thereby closing the x contacts and energizing the breaker closing solenoid, which causes the breaker to close. When the breaker closes, the prop switch causes the breaker closing solenoid to be de-energized.

The breaker may be tripped manually by pushing the manual trip button, which is located on the front escutcheon or automatically by any of the trip devices with which the breaker is equipped. The breaker mechanism will automatically reset when the breaker is tripped. The breaker is "trip free" from the closing mechanism, which assures that it cannot be closed as long as any trip device is functioning.

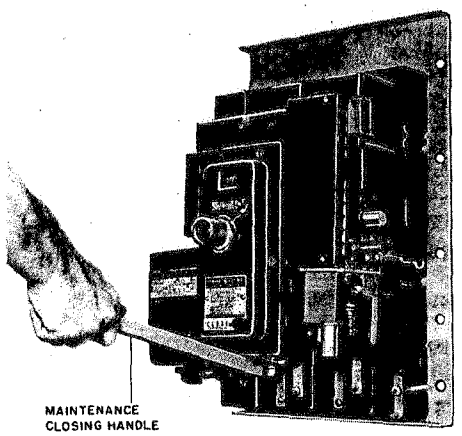

Fig. 2 (8016119)

Fig. 2 Closing Breaker With Manual Maintenance Handle

MAINTENANCE

INSPECTION

BEFORE INSPECTION OR ANY MAINTENANCE WORK IS DONE, BE SURE THAT THE BREAKER IS IN THE OPEN POSITION. ALL ELECTRICAL POWER, BOTH PRIMARY AND CONTROL SOURCES, SHOULD ALSO BE DISCONNECTED.

Periodic inspection of the circuit breaker is recommended at least once a year. More frequent inspections are recommended, if severe load conditions, dust, moisture, or other unfavorable conditions exist.

If the breaker remains open or closed for a long period of time, it is recommended that arrangements be made to open and close it several times in succession, preferably under load.

At all times it is important not to permit pencil lines, paint, oil or other foreign materials to remain on the insulating surfaces of the breaker as they may cause low resistance between points of different potential and result in eventual electrical breakdown.

Always inspect the breaker after a short circuit current has been interrupted.

At the time of periodic inspection, the following checks should be made after the breaker has been de-energized.

1. Manually operate the breaker several times, check for obstructions or excessive friction.
2. Electrically operate the breaker several times to ascertain whether the electrical attachments are functioning properly.
3. Arc quencher (See Section on "Arc Quencher").
4. Contact condition, wipe, and pressure (See Section on "Pole Unit Assembly").
5. Latch engagement (See Adjustments under "Operating Mechanism").
6. Overload device tripping (See Adjustments under "Series Overcurrent Tripping Device").

TOOLS

The tools listed below will adequately equip an operator for any maintenance operation on all types and ratings of the AK air circuit breaker.

#1 Phillips Screw Driver
#2 Phillips Screw Driver with 8" shaft
#3 Phillips Screw Driver
K101-1/2 Crescent (Short) Screw Driver
K505-1/2 Crescent (Long Thin) Screw Driver
K306 Crescent (Standard) Screw Driver

H-28 8" Gas Pliers
654 Pointed Nose Side Cutting 6" Pliers
#2 Waldes Truarc Pliers Straight
#2 Waldes Truarc Pliers 90° Angle

Ratchet Socket Wrench 1/2" Drive
7/16" - 1/2" Drive Socket
9/16" - 1/2" Drive Socket
5/8" - 1/2" Drive Socket
3/4" - 1/2" Drive Socket
13/16" - 1/2" Drive Socket
15/16" - 1/2" Driver Socket
10" Extension Bar 1/2" Drive
6" Extension Bar 1/2" Drive

8" Adjustable End Wrench
1/4" - 5/16" (Blue Point) Open End Wrench
1/2" - 9/16" Open End Wrench
5/8" - 3/4" Open End Wrench
3/8" - 7/16" Open End Wrench
11/32" - 5/16" Open End Wrench

1/16" Allen Head Wrench for #6 Screw
5/64" Allen Head Wrench for #8 Screw
3/32" Allen Head Wrench for #10 Screw
1/8" Allen Head Wrench for 1/4" Screw
5/16" Straight Shank Allen Head Wrench for 3/8" screw, with adapter for 1/2" drive ratchet

8 oz. Ball peen hammer

5/8" 6 point open box wrench

3/8" Spintite

LUBRICATION

In general, the circuit breaker requires moderate lubrication. Bearing points and latch surfaces should be lubricated at the regular inspection periods with a thin film of extreme temperature, high-pressure, light grease similar to G. E. Spec. No. D50H15. Hardened grease and dirt should be removed from latch and bearing surfaces by using kerosene. ALL EXCESS LUBRICANT SHOULD BE REMOVED WITH A CLEAN CLOTH IN ORDER TO AVOID ANY ACCUMULATION OF DIRT OR DUST.

TROUBLE SHOOTING

TROUBLE	CAUSE	REMEDY
Overheating	Contacts not aligned.	Adjust contacts.
	Contacts dirty, greasy or coated with dark film.	Clean contacts.
	Contacts badly burned or pitted.	Replace contacts.
	Current carrying surfaces dirty.	Clean surfaces of current carrying parts.
	Bolts and nuts at terminal connections not tight.	Tighten, but do not exceed elastic limit of bolts or fittings.
	Current in excess of breaker rating.	Decrease load, rearrange circuit or install larger breaker.
	Excessive ambient temperature.	Provide adequate ventilation.
Failure to Trip	Travel of tripping device does not provide positive release of tripping latch.	Re-adjust or replace trip unit.
	Worn or damaged trip unit parts.	Replace trip unit.
	Binds in overload device.	Replace overload device.
False Tripping	Overload pick-up too low.	Change adjustment or replace with higher rated device.
	Overload time-setting too short.	Change adjustment or replace with higher rated device.
	Bind in overload device.	Replace device.
Failure to Close and Latch	Binding in attachments preventing resetting of latch.	Re-align and adjust attachments.
	Chipped or worn latch.	Replace latch.
	Latch out of adjustment.	Adjust latch.

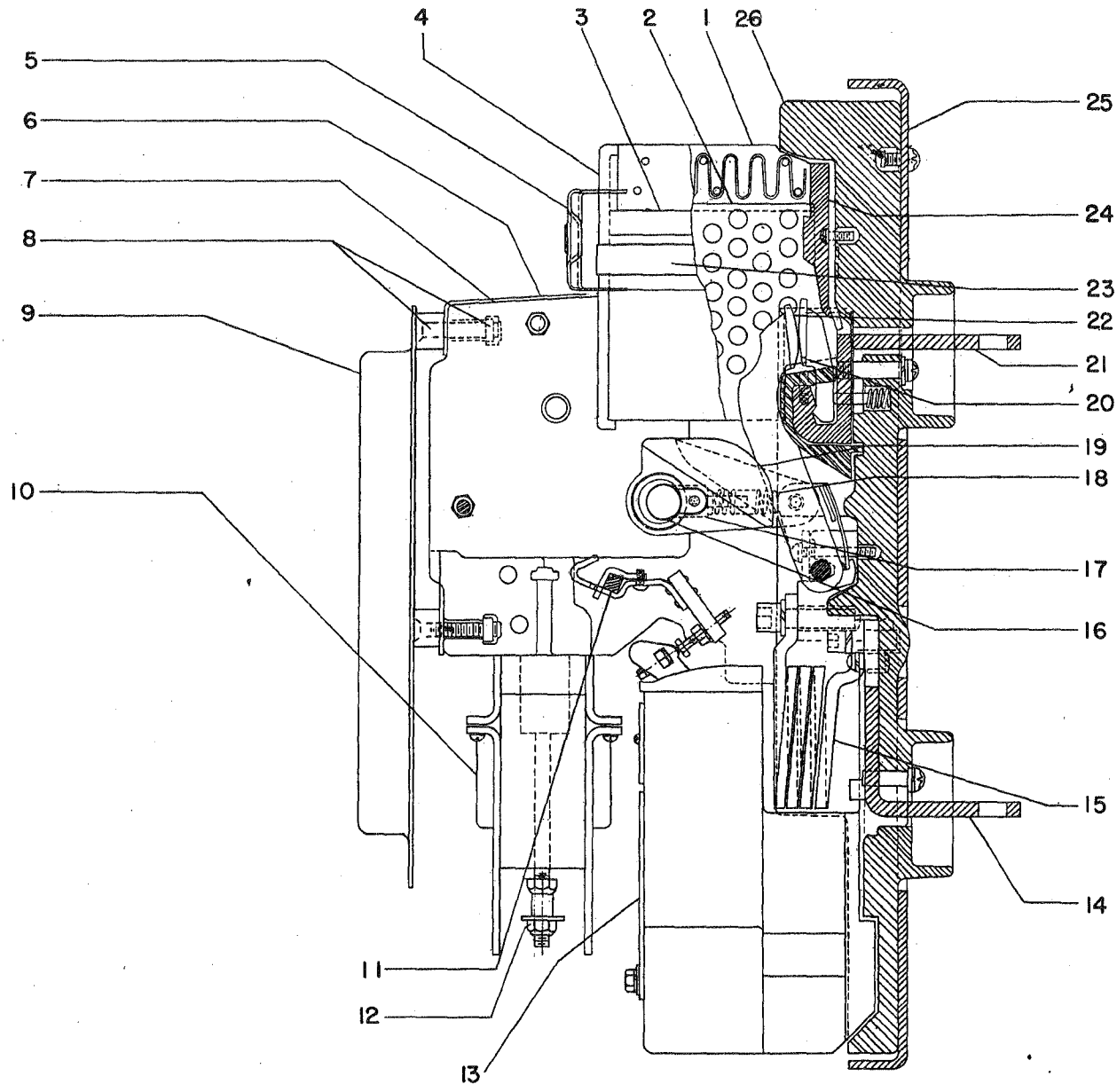

1. Muffler
2. Inside Barrier
3. Outside Barrier
4. Front Cap
5. Clamp
6. Strap
7. Operating Mechanism
8. Mounting Screw & Nut
9. Front Escutcheon
10. Hub
11. Trip Shaft
12. Stop Nut
13. Overcurrent Trip Device
14. Lower Stud
15. Series Coil
16. Main Shaft
17. Cap
18. Opening Spring
19. Insulating Link
20. Stationary Contact
21. Upper Stud
22. Movable Contact
23. Fiber Strap
24. Rear Support
25. Steel Base
26. Pole Unit Base

Fig. 3 Right Side View of Breaker

Fig. 3 (215D170)

TROUBLE SHOOTING

TROUBLE	CAUSE	REMEDY
Failure to Close and Latch	Latch return spring too weak or broken. Hardened or gummy lubrication on bearing and latch surfaces. Closing solenoid burned out. Solenoid control device not functioning properly.	Replace spring. Clean bearing and latch surfaces. Replace solenoid coil. Re-adjust or replace device.

BASIC BREAKER COMPONENTS

ARC QUENCHER

Each arc quencher (see Fig. 3) has several compound inside barriers (2) containing a large number of perforations and two outside barriers (3) without perforations, as well as a front cap (4) and a rear support (24) held in place by a fiber strap (23). A clamp (5) is attached to the breaker base by two bolts. Clamp (5) holds all the arc quencher assemblies to their respective pole units. A muffler (1) is located on top of the compound barriers. The compound barriers and the muffler, together with the slots between the barriers, serve to extinguish the arc.

The arc quenchers should be inspected at the regular inspection period and parts replaced, if badly burned or corroded.

REPLACEMENT, FIG. 3

1. Remove clamp (5) by removing two bolts.
2. Unclasp fiber strap (23).
3. Remove front cap (4), muffler (1), outside barriers (3), inside barriers (2) and rear support (24).
4. Install new or disassembled parts in reverse order.

NOTE: In re-assembling the rear support (24) to the breaker, be sure and push the rear support toward the top of the pole unit so that the clearance in the rear support will accommodate the screw-head of the back plate.

POLE UNIT ASSEMBLY

The contact assembly of each pole unit consists of a stationary and a movable contact sub-assembly. Refer to Fig. 6.

The stationary contact assembly consists of parallel contact fingers (3) with silver alloy tips, the upper stud (20) and pins (4) with compression springs (19) which provide continuous contact pressure between the contact fingers and the upper stud (20). A shunt (21) is used to prevent pitting at the pivot point of the stationary fingers when carrying high momentary currents. The stationary contact fingers are held in place by the upper stud cap (6).

The movable contact assembly consists of parallel contact arms (5) with silver alloy tips, a contact carrier (18) with a spring (17) which provides continuous contact between the contact arms and pin (15). A clamp (14) secures pin (15) to the contact support (16). A flexible connection (12) is provided to prevent pitting at the pivot point of the movable contact arms when carrying high momentary currents.

The movable contact assembly is connected to the main shaft (16), Fig. 3, by an insulating link (7) for operating the contacts when the breaker closes. A definite amount of contact pressure (see "Measuring Contact Pressure") must be exerted by the movable contacts against the stationary contacts. A definite amount of contact wipe, or the distance that the stationary contacts are pushed to the rear by the movable contacts (see "Measuring Contact Wipe"), must result during the closing operation. Both contact pressure and contact wipe should be checked at the regular inspection period.

MEASURING CONTACT PRESSURE, FIG. 6

1. Remove arc quencher (see "Replacements" under Arc Quencher).
2. Place a push-type scale against the upper end of the stationary contact tip (3) with the breaker closed.
3. Exert pressure against the push-type scale until the contacts just part. When the contacts part the scale should register between 4 and 6 pounds.
4. Re-assemble parts in reverse order.

MEASURING CONTACT WIPE, FIG. 6

1. Remove arc quencher (see "Replacements" under Arc Quencher).
2. Measure the dimension between the inside surface of the pole base and the top edge of the stationary contact tip (3), (a) with the breaker open, (b) with the breaker closed.
3. The difference between these two measurements should be within the limits of 3/32" and 1/4". If not within this range, the contact wipe must be adjusted.
4. With the breaker closed, the stationary contacts should have a minimum of 1/16" overtravel, measured at the contact tips, before reaching the limit of their movement in the direction of closing.
5. Replace arc quencher.

ADJUSTING CONTACT WIPE AND CONTACT PRESSURE, FIG. 6

1. Remove arc quenchers (see "Replacements" under Arc Quencher).
2. Remove tru-arc retaining ring from main shaft (16), Fig. 3, nearest the insulating link and contact assembly to be adjusted.
3. Loosen clamp (9) which secures eccentric bushing (8).
4. Turn the eccentric bushing in the insulating link (7) threby moving the insulating link closer or farther away from the stationary contacts, as required to obtain proper wipe.
5. Reassemble parts in the reverse order after making adjustments.

NOTE: To adjust the insulating link in the center pole unit, first, push the main shaft through the right hand insulating link and into the center link as described in item 2 and 3 above. Opening spring and cap will drop out. Adjust center insulating link as described in item 4 above. Reassemble parts in reverse order being careful to replace opening spring and cap in their proper position.

If any of the contacts are badly corroded or pitted, thereby making it impossible to adjust for proper contact pressure or contact wipe, such stationary contacts or movable contact assemblies should be replaced. See "Replacements" below.

If the proper contact pressure does not exist when the wipe is within its limits, the stationary contact springs must be replaced.

REPLACEMENTS

Movable Contact Assembly, Fig. 6

1. Remove arc quenchers (see "Replacement" under "Arc Quencher").
2. Remove main shaft from breaker by removing tru-arc retainer from one end and pushing shaft through insulating links (7). As shaft clears the mechanism side frames, the opening springs and caps, (17) and (18) Fig. 3, will probably drop out of their recesses in the side frames. If breaker is of the drawout type, handle socket, interlock lever, bushing and nut must be removed on side from which the main shaft is to be removed. (See Figs. 4 and 5.)
3. Remove upper mechanism mounting screws (refer to Fig. 4).
4. Loosen lower mechanism mounting screws by using screw driver in slot provided on threaded end of screw which projects through back frame of breaker. (See Fig. 7.)
5. Mechanism and attached components may now be lifted clear of the breaker. If breaker is of the drawout type, movement of the mechanism will be somewhat restricted by control wires. There will be enough freedom, however, to allow the mechanism to be lifted to the top of the drawout frame, where it can be secured by tying. (See Fig. 8.)
6. Remove insulating link (7) by removing tru-arc and drifting out pin (11).
7. Remove clamps (14) by removing fastening hardware.
8. Remove series coil terminal bolts. Movable contact unit is now free and may be removed.
9. Breaker may now be reassembled with new contact assembly by reversing the above described procedure. In remounting mechanism, be sure that dowels in mechanism side frames are well seated in dowel holes in the pole unit base. (See Fig. 8.) It will also be necessary to compress the opening spring and cap in the recess in the mechanism side frame in order to obtain clearance for replacement of the main shaft.
10. Check contact wipe and pressure and adjust if necessary.

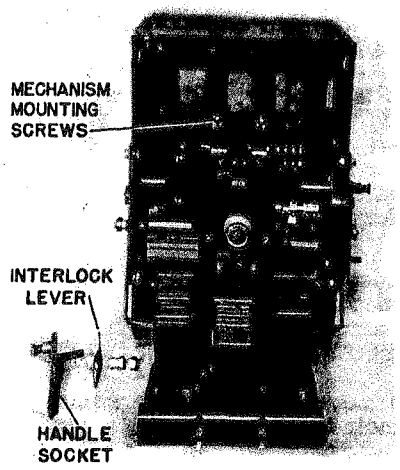

Fig. 4 Arc Quenchers and Handle Socket Removed from Drawout Breaker

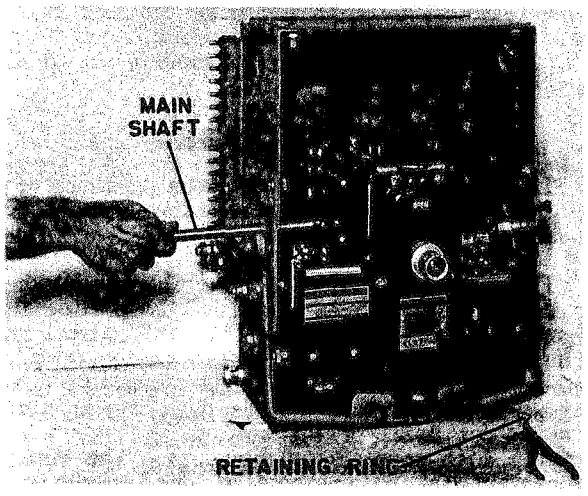

Fig. 5 Removal of Main Shaft from Drawout Breaker

Fig. 4 (8018918)

Fig. 5 (8018937)

Fig. 6 (P-6423664)

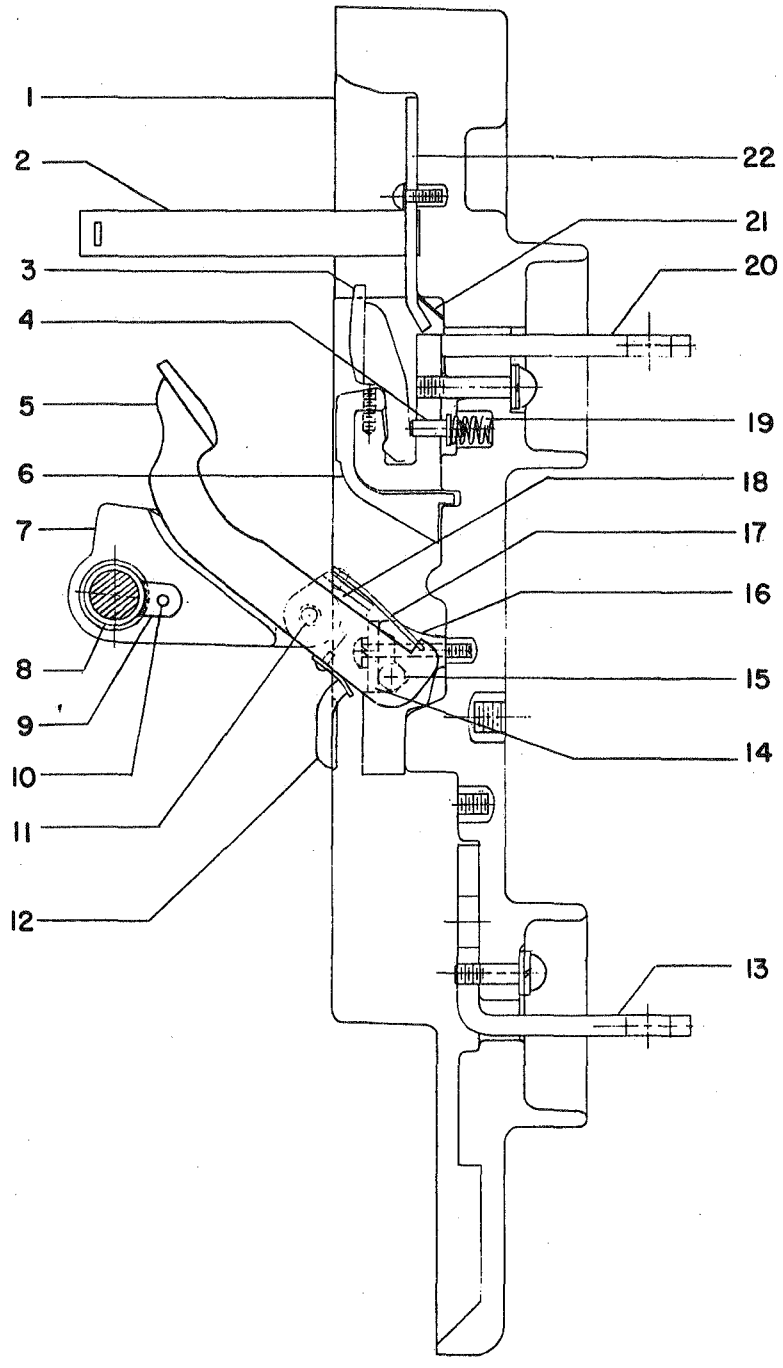

1. Pole Unit Base
2. Fiber Strap
3. Stationary Contact
4. Contact Pin
5. Movable Contact Arm
6. Upper Stud Cap
7. Insulating Link
8. Eccentric Bushing
9. Clamp
10. Screw
11. Pin
12. Flexible Connection & Terminal
13. Lower Stud
14. Clamp
15. Pin
16. Contact Support
17. Spring
18. Contact Carrier
19. Spring
20. Upper Stud
21. Shunt
22. Steel Plate

Fig. 6 Pole Unit Assembly

Stationary Contact (3) Fig. 4

1. Remove arc quencher (see Replacements" under Arc Quencher).
2. Remove upper stud cap (6) by removing two holding screws.
3. Pry the stationary contact (3) from upper stud (20). On outside poles, the stationary contacts are readily accessible. On the center pole, it is recommended that the mechanism be taken off the breaker to facilitate removal of the contacts. This may be done by following steps 1 to 5 of the procedure for replacing movable contacts.
4. Replace the new stationary contact in reverse order. (It may be necessary to tap the new stationary contact into place by using a rawhide mallet).
5. Adjust contact wipe and contact pressure (see above).

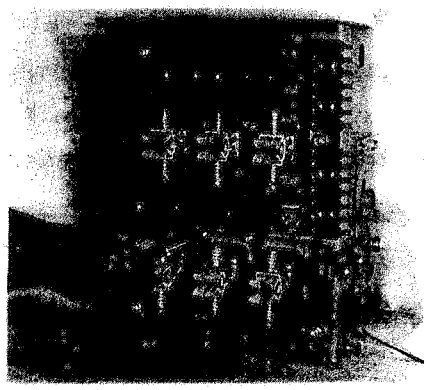

Fig. 7 Loosening Lower Mechanism Mounting Bolts

OPERATING MECHANISM

WITHOUT CLOSING HANDLE

The operating mechanism, see Fig. 10, is supported between two molded side frames in front of the center pole unit. It consists of a toggle linkage (19), crank (5), latch (15), trip shaft (12), roller (6), closing links (1), and armature (14).

When the coil (8) is energized it pulls armature (14) downward, which, through closing links (1), causes the toggle linkage (19) to straighten. This motion causes the main shaft (18) and movable contacts to move to the closed position. As soon as the toggle linkage is straightened the proper (23) moves on top of prop pin (20) and roller (6) moves on latch (15) thereby holding the mechanism in the closed position. The motion of the prop (23) causes switch (25) to operate, thus de-energizing the closing coil.

The breaker mechanism is tripped by rotating the trip shaft (12), and releasing latch (15) which causes the toggle linkage to collapse, thereby allowing the opening springs (17) to push the main shaft and movable contacts forward to the open position. Trip latch (15) is automatically reset during the opening operation providing none of the

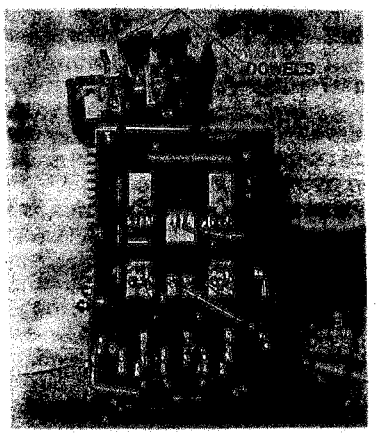

Fig. 8 Removal of Stationary Contacts

trip devices are actuated. Latch adjusting screw (9) limits the rotation of the trip shaft (12) and thus determines the amount of latch engagement.

To operate the breaker manually see section on "Operation".

ADJUSTMENTS, FIG. 10

Latch (15) is adjusted to provide approximately 5/64" engagement between latch and roller (6). To adjust for proper latch engagement, follow the procedure described below:

1. Loosen locknut on adjusting screw (9).
2. Hold breaker contacts in a position in which the movable contacts are just touching the stationary contacts. This may be done by any of the provided means of manual closing.
3. Turn down adjusting screw (9) until breaker trips open. Normally the force required to rotate the trip shaft is small enough so that the spring on the buffer paddle (10) is not noticeably deflected. If any deflection is observed while turning down the screw, back off screw until spring returns, then turn down screw again. If deflection persists, check trip shaft for binds.
4. Mark position of adjusting screw head.
5. Repeat steps 2 and 3 and check position of adjusting screw in relation to marked position.
6. If adjusting screw is in the same position as it was in the first tripping, back off the screw 3 full turns and tighten locknut. If it is not, repeat steps 2 and 3 until a constant tripping position is determined before backing off the three turns and locking. This check is necessary to avoid a false setting due to accidental tripping.
7. Operate the breaker electrically several times to make sure that the mechanism functions correctly.

The stop nuts (13) should be adjusted so that there is approximately 1/16" clearance between the bottom of the magnet and the upper stop nut. This will restrict linkage movement in tripping but allow enough movement for the mechanism to reset.

REPLACEMENTS, FIG. 10

Mechanism

1. Remove arc quenchers (see "Replacement" under "Arc Quencher").
2. Remove escutcheon (4).
3. If breaker is supplied with a terminal block, dismount block by removing two screws in back which fasten it to the supporting bracket.
4. Remove shunt trip supporting bracket by taking out the two screws which fasten it to the mechanism side frame. The nuts for these screws are loosely held in the recesses on the inner side of the frame. If breaker is supplied with an undervoltage device, this also will be dismounted since it is held by the same supporting bracket.
5. If breaker is supplied with a closing switch, dismount switch base by removing two screws (10), Fig. 14.
6. Remove solenoid control device cover.
7. Remove X contactor and Y relay together, first removing two screws securing Y relay to arm which projects from magnet, then loosening the three screws which fasten the X contactor to the supporting arms. Both devices can then be removed by lifting slightly and moving towards front of breaker.
8. Remove stop nuts from armature plunger (13), Fig. 10.
9. Remove lower section of magnet and closing coil by taking out four screws (7).
10. Remove upper section of magnet by taking out two screws which fasten it to mechanism side frames. (See Fig. 9).
11. Remove auxiliary switch by taking out bolt (1) and screw (4), Fig. 13.
12. Remove cutoff switch (25) by removing lock-nuts (24).
13. Remove tru-arc and take out main shaft (18), being careful not to lose opening spring (17) and cap which may pop out when main shaft is removed.
14. Take off mechanism by removing mounting screws from mechanism frame.
15. Mechanism may now be replaced as a unit or disassembled and then reassembled with new parts as needed.
16. Reassembly of the breaker is accomplished by reversing the procedure described. In replacing the mechanism, make sure that the dowels on the mechanism side frames are properly seated in the dowel holes in the pole unit base; also that the opening springs and caps are positioned properly when replacing the main shaft.
17. Adjust prop switch as described under "Adjustments" in "Solenoid Control System" and check operation of breaker manually and electrically.

NOTE: If a reasonable amount of care is exercised, wiring lead connections will not be overstressed and need not be disconnected in the course of the disassembly procedure. The electrical accessories may be tied up out of the way of the operator. If leads are disconnected, they should be marked to avoid incorrect reconnection.

Opening Springs (17) Fig. 10 or (16) Fig. 11

Opening springs may be replaced by following the first two steps of the procedure for replacing the movable contact assembly.

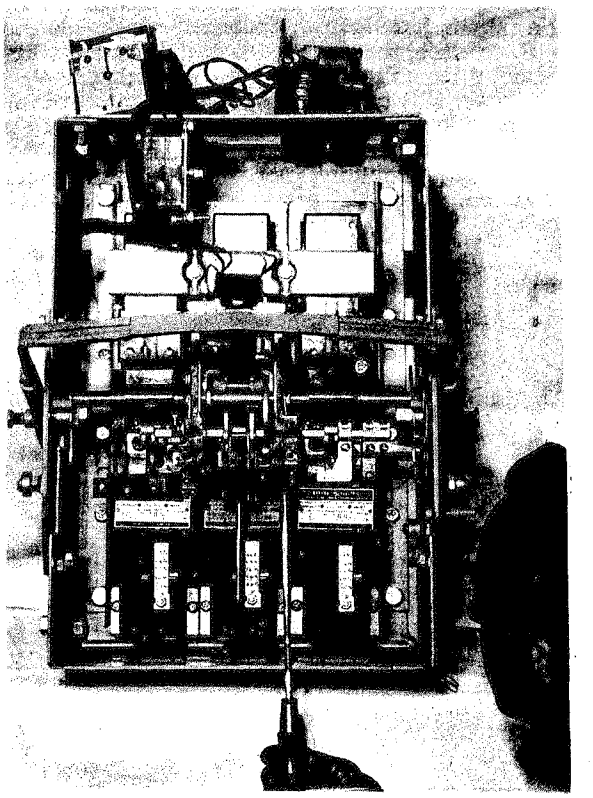

Fig. 9 Dismounting Upper Section of Magnet

Fig. 9 (8018924)

WITH CLOSING HANDLE, FIG. 11

The electrically operated mechanism equipped with a manual operating handle is shown in Fig. 11. This mechanism is similar to the one furnished without an operating handle with the following exceptions:

a. There is only one stop nut (11) on the lower end of the rod extending from the armature (12) since there is no need to provide for operation by the maintenance handle.

b. The mechanism which is furnished with an operating handle contains a cam support (7) and cam (6), (see Fig. 11), whereas the mechanism furnished without an operating handle contains neither of these parts.

The sequence for electrical operation is the same as given for the mechanism furnished without an operating handle. (Refer to the second paragraph under, "Operating Mechanism - Without Closing Handle").

Turning the operating handle (5) in the clockwise direction 90° causes a roller attached to the operating shaft to engage cam (6) thereby moving the cam support (7) toward link (4). See Fig. 11. This motion straightens the operating linkage, thereby moving the main shaft (17) and movable contacts to the closed position. Prop (22) engaging pin (19) and latch (13) resting on roller (8) will hold the contacts in the closed position. Rotating the tripshaft (14) in the counter-clockwise direction will release the roller (8) which cauues the toggle linkage to collapse thereby allowing the opening springs (16) to push the main shaft and movable contacts forward to the open position. Trip latch (13) is automatically reset during the opening operation, providing none of the trip devices are actuated.

Adjustments

In addition to the adjustments shown for mechanisms furnished without an operating handle, adjustment screw (26) must be set for proper operation. This adjustment is satisfactory if the screw is set in such a position that the following two conditions are met:

1. In closing, there must be enough overtravel of the mechanism to easily allow prop (22) to move on pin (19). Fig. 11.

2. When the breaker is open, roller (8) must clearly be free of contact with latch (13).

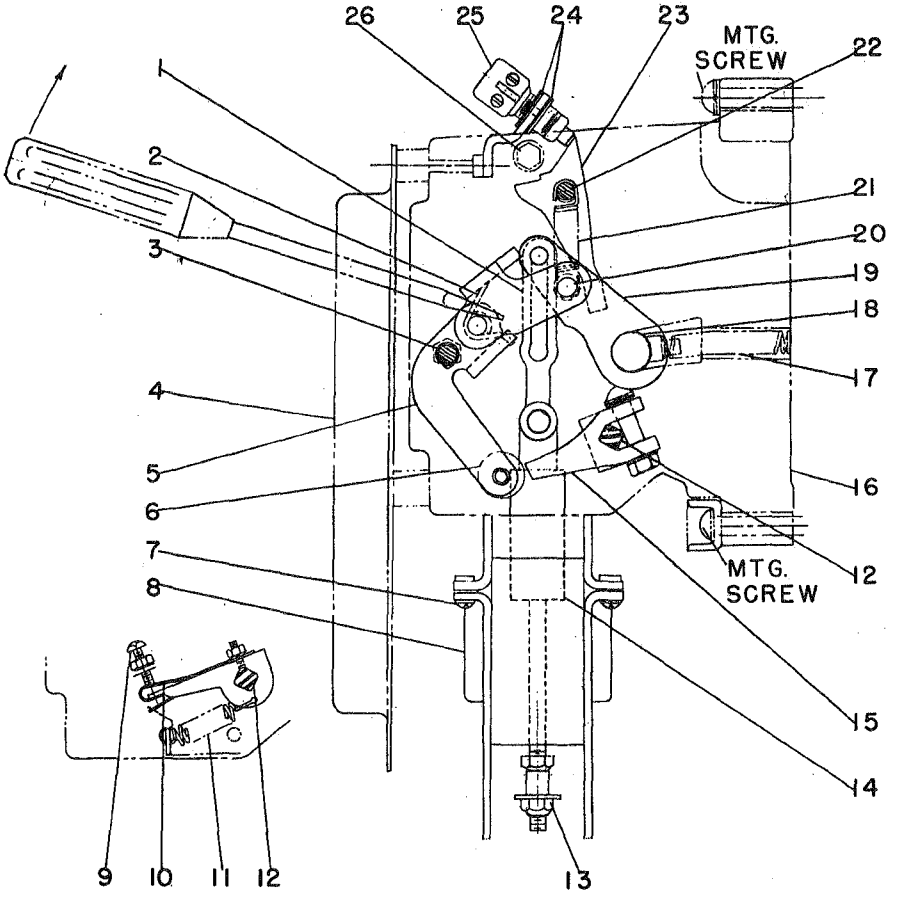

1. Closing Link
2. Cam Return Spring
3. Hold In Post
4. Escutcheon
5. Crank
6. Roller
7. Screw
8. Coil
9. Trip Shaft Adj. Screw
10. Buffer Paddle
11. Trip Shaft Ret. Spring
12. Trip Shaft
13. Stop Nut
14. Armature
15. Latch
16. Mech. Frame
17. Opening Spring
18. Main Shaft
19. Toggle Link
20. Pin
21. Reset Spring
22. Prop Pin
23. Prop
24. Locknuts
25. Switch
26. Screw

Fig. 10 Operating Mechanism Without Operating Handle

Fig. 10 (242C607)

Replacements

The replacement of parts in the operating mechanism furnished with a manual handle are similar to those for the mechanism furnished without a handle, with the following additions:

Front Escutcheon Assembly

1. Remove four mounting screws (8), Fig. 3.
2. Now pull forward on the operating handle turning and tipping the front escutcheon slightly until dislodged from the breaker.
3. To remount the front escutcheon assembly, first, hold the trip shaft in a trip free position. Then pull the cam support, (7) Fig. 11, slightly forward.
4. Insert the operating shaft and roller into the hole of the cam support so that the roller drops behind cam (6), Fig. 11.
5. Replace the four mounting screws to secure the front escutcheon assembly to the mechanism frame.

Replacing the Operating Handle

1. Remove the short set screw from the tapped hole in the operating handle.
2. Back off a second longer set screw from the same tapped hole until it is moved clear of the shaft.
3. Pull forward on operating handle until it is released from the front escutcheon and operating shaft.
4. Re-assemble operating handle to front escutcheon and operating shaft in reverse order.

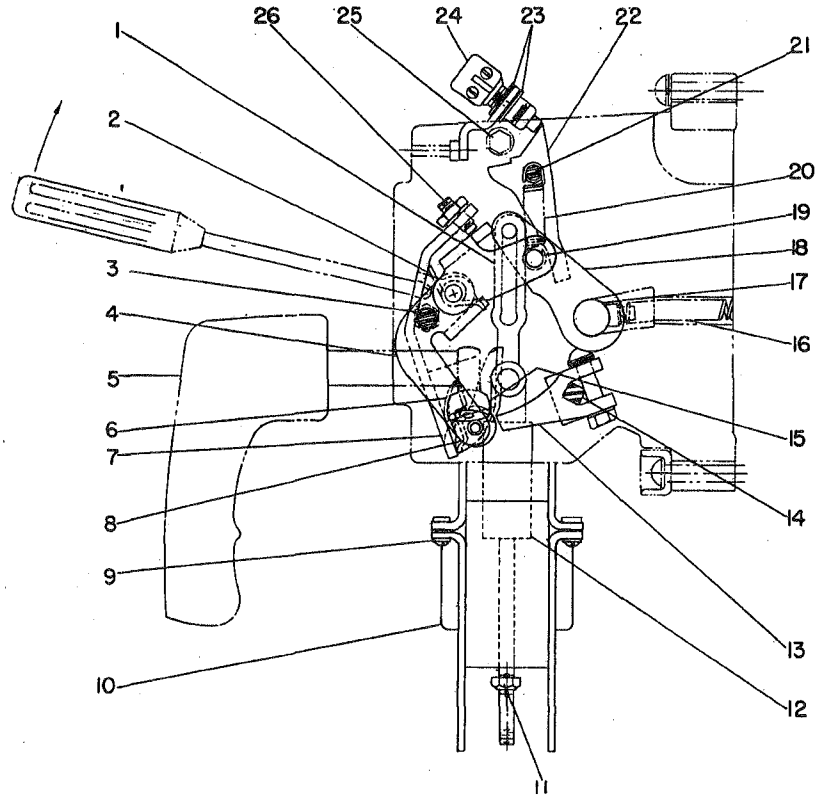

1. Closing Link
2. Cam Return Spring
3. Hold In Post
4. Link
5. Handle
6. Cam
7. Cam Support
8. Roller
9. Screw
10. Coil
11. Stop Nut
12. Armature
13. Latch
14. Trip Shaft
15. Cam Roller
16. Opening Spring
17. Main Shaft
18. Toggle Link
19. Pin
20. Reset Spring
21. Prop Pin
22. Prop
23. Locknuts
24. Switch
25. Screw
26. Adjusting Screw

Fig. 11 Operating Mechanism With Closing Handle

Addition of Closing Handle

If it is desired to add a manual closing handle to a breaker which was not furnished with one originally, the conversion may be made by following the procedure below. Required parts catalog numbers may be obtained by reference to Renewal Parts Bulletin GEF-3506.

1. Follow steps 1 to 14 of procedure for replacement of the mechanism.
2. After mechanism has been removed, remove right mechanism side frame by removing hardware at (3) and (26), Fig. 10, all trip shaft attachments to the right of the mechanism, and the trip shaft retaining ring.
3. The toggle linkage and armature, now free of the mechanism side frames, may be disassembled and reassembled with the parts required for manual operation. Return spring, (2) Fig. 11, replaces (2) Fig. 10, and cam support, (7) Fig. 11, is added to the linkage assembly. Fig. 11 shows how the linkage should be reassembled.
4. Reassemble mechanism and breaker parts with exception of escutcheon.
5. Mount new escutcheon assembly, which will include a manual operating handle, according to the directions in the section titled "WITH CLOSING HANDLE" under "Replacements".
6. Adjust screw, (26) Fig. 11, as described in "Adjustments" under "WITH CLOSING HANDLE."
7. Check manual and electrical operation of breaker.

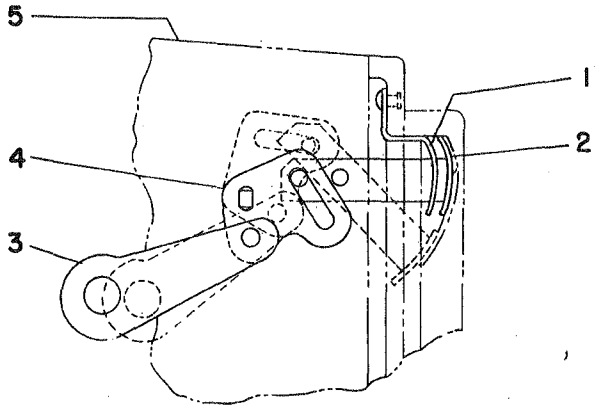

1. Stationary Indicator (Open)
2. Movable Indicator (Closed)
3. Link
4. Crank
5. Mechanism Frame

Fig. 12 Position Indicator

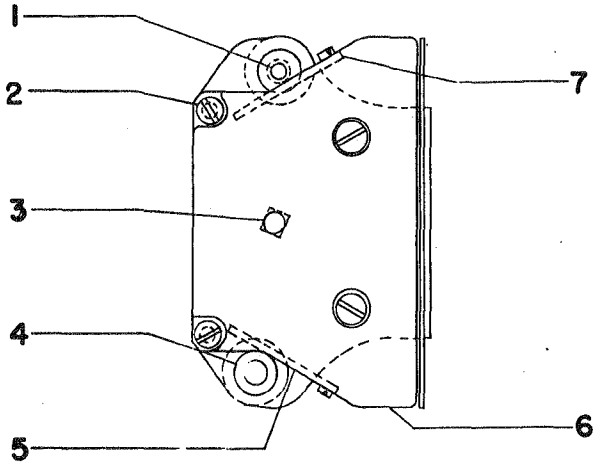

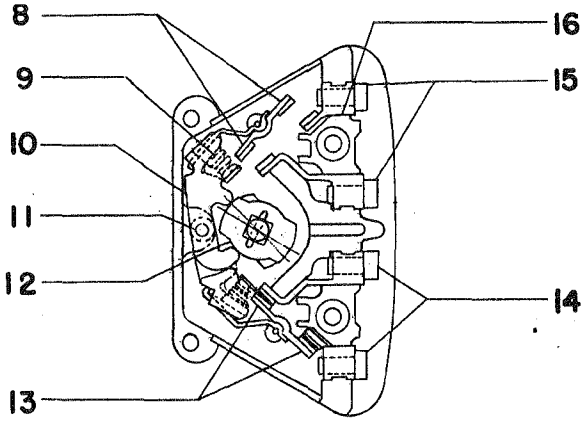

STAGE OF SWITCH SHOWING BREAKER IN OPEN POSITION

1. Mounting Bolt
2. Tie Bolt
3. Shaft
4. Screw
5. Bottom Cover
6. End Plate
7. Top Cover
8. 'a' Contacts
9. Contact Spring
10. Rocker Arm
11. Pin
12. Cam
13. 'b' Contacts
14. 'b' Terminals
15. 'a' Terminals
16. Barrier

Fig. 13 Auxiliary Switch

AUXILIARY SWITCH

FIGURE 13

The auxiliary switch is mounted on the left side of the operating mechanism. The main shaft (17), Fig. 11, of the breaker causes crank (4), Fig. 12; to rotate as the breaker opens and closes. The crank operates the auxiliary switch shaft (3), Fig. 13 which opens and closes the "a" and "b" contacts of the switch. (The "a" contacts are open when the breaker is open; the "b" contacts are closed when the breaker is open). The opening and closing of the auxiliary switch contacts is determined by an arrangement of cams (12), mounted on the auxiliary switch shaft (3). The top terminals of the switch are "a" contacts, the bottom terminals are "b" contacts.

ADJUSTMENTS, FIG. 13

The contacts of any stage may be changed from "a" to "b" or vice versa. If changes are desired in the operation of the contacts, an approved drawing of the cam (12) arrangement should be obtained or a careful sketch made. In order to change an "a" contact to a "b" contact, it is necessary to remove the four tie bolts (2) and change the position of the particular cam 90° in relation to the shaft. Contacts should be cleaned occasionally to insure proper performance.

REPLACEMENTS, FIG. 13

1. Disconnect all leads to the auxiliary switch.
2. Remove mounting bolt (1) and screw (4) to remove device from breaker.
3. If no approved sketch of the cam arrangement is available, remove the end plate (6) from the device by removing the four tie bolts (2) and draw a sketch of the position of the particular cam in relation to the shaft.
4. Before installing the new device, see that the cams are in the same position as in the device that is being replaced.
5. Install the new device in reverse order.

ELECTRICAL CLOSING DEVICES AND CONTROLS

The electrical closing devices and controls consist of the following:

a. Closing Switch
b. Solenoid Control System
c. Closing Solenoid

CLOSING SWITCH, FIG. 14

The closing switch is located in the lower right hand corner of the front escutcheon (1).

A push button extends through the front escutcheon and is supported by bracket (3). Spring (6) returns the push button to a neutral position after the movable contact (8) has momentarily engaged the stationary contacts (12). Two retainers (2) and spacer (7) are used to hold the movable contact in place.

The stationary contacts (12) and insulation strip (13) are attached to the closing solenoid by bracket (9) and screws (10). A remote closing switch may be used to close the circuit of the solenoid control system, thereby energizing the closing solenoid.

Adjustments

The closing switch requires no attention, other than cleaning of contact occasionally.

SOLENOID CONTROL SYSTEM

This system consists of an X contactor and Y relay (see Fig. 15) which are located on the left side of the operating mechanism. It also contains a prop switch (25), Fig. 10, which is located in the top front of the operating mechanism (looking from the front). The sequence of operation is as follows:

a. When the closing switch is closed, the coil of the X contactor becomes energized.
b. The contacts of the X contactor make, sealing its coil in and also energizing the breaker closing coil.
c. The breaker then closes and latches causing the bb contact of the prop switch (25), Fig. 10, to open thereby de-energizing the X contactor coil and the breaker closing coil.

NOTE: If the closing switch is closed while the breaker is in the closed position, or if it remains closed after the breaker closes, the coil of

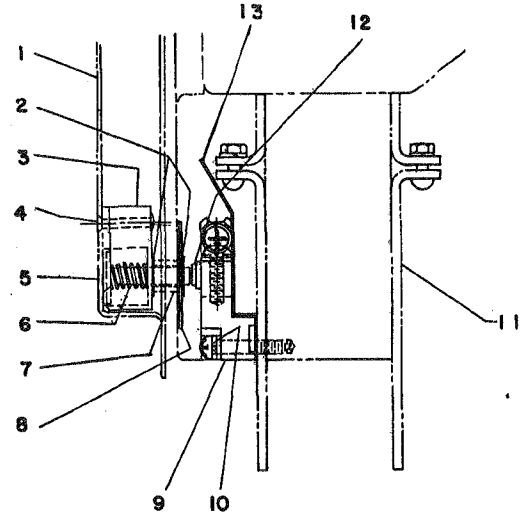

1. Front Escutcheon
2. Retainers
3. Bracket
4. Rivets
5. Push Button
6. Spring
7. Spacer
8. Movable Contact
9. Bracket
10. Screw
11. Closing Solenoid
12. Stationary Contact
13. Insulation Strip

Fig. 14 Closing Switch

Fig. 14 (M-6496854)

the Y relay will become energized through the aa contact of the prop switch (25), Fig. 10. This will open the circuit to the X contactor coil, thereby preventing the X contactor from operating. This feature makes it impossible to operate the closing solenoid when the breaker is already closed. It also provides for cut-off of the closing solenoid and anti-pump operation.

Adjustments

The only adjustment required for this system is on the prop switch (25), Fig. 10. To make this adjustment proceed as follows:

1. Press the trip button in the front of the breaker.
2. Maintain pressure on the trip button and at the same time close the breaker with the maintenance operating handle, see Fig. 2.
3. The prop switch (25), Fig. 10, should operate just before the armature (14), Fig. 10, reaches the end of its stroke. To obtain this adjustment move the prop switch toward or away from the prop (23), Fig. 10. Moving the switch too close to the prop can result in damage to the switch if its operating button is forced to travel beyond the limit of its movement. It is also possible, in this case, for the switch not to toggle when the breaker closes. (When the breaker closes, the prop moves away from the switch and the button is extended). This would leave the bb contacts closed with the breaker closed, and burn out the contactor and closing solenoid coils. If, on the other hand, the switch is too far away from the prop, it is possible for the bb contacts to remain open when the breaker is open. This would make it impossible to close the breaker electrically. This condition could also result in false tripping even though the switch may operate, since the thrust of the switch button is depended upon to move the prop into position and hold it in place on breaker closing operations.

Replacements

X Contactor and Y Relay, Fig. 15

1. Remove cover.
2. Disconnect wiring.
3. Remove two screws which fasten Y relay to upper extension of magnet frame.
4. Loosen three screws which fasten X contactor to magnet frame extensions.
5. Replace new device in reverse order.

Prop Switch (25), Fig. 10

1. Remove wiring.
2. Remove locknuts (24) from switch.
3. Replace switch in reverse order.

CLOSING SOLENOID, FIG. 10

The closing solenoid is located directly below the operating mechanism. It consists of a coil (8), a magnet, an armature (14), and four closing links (1).

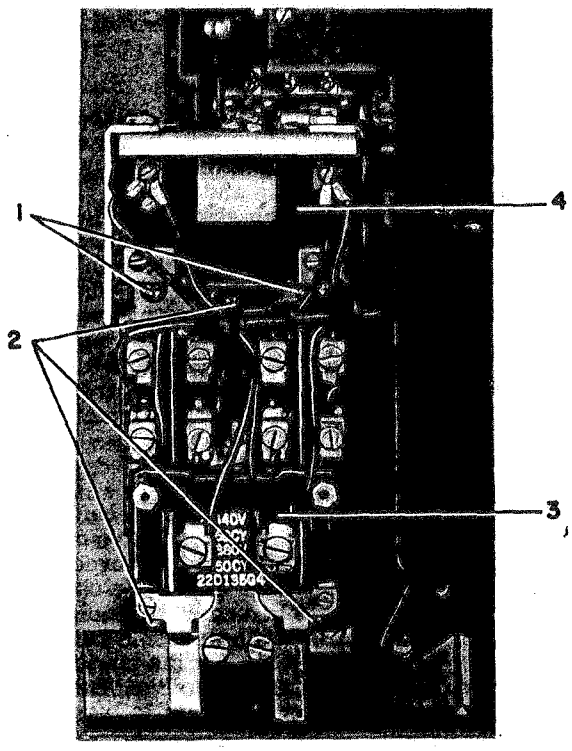

Fig. 15 (8019829)

1. Mtg. Screws, Y Relay
2. Mtg. Screws, X Contactor
3. X Contactor
4. Y Relay

Fig. 15 X Contactor and Y Relay

The closing solenoid is connected in series with the main contacts on the X contactor and is energized or de-energized when these contacts are closed or opened, respectively. When the closing solenoid is energized, its armature (14) is drawn downward into the coil (8) pulling the four closing links (1) in the same direction. This action straightens the toggle linkage (19), of the operating mechanism, thereby closing the breaker. As the operating mechanism moves into the closed position, the prop switch (25) operates, causing the X contactor coil and breaker closing coil (8) to be de-energized.

Adjustment

The stop nut (13) Fig. 10, should be set so that there is approximately 1/16" clearance between the nut and the magnet when the breaker is in the open position. This adjustment is required in order to allow the mechanism linkage to reset.

Replacements, Fig. 10

Closing Solenoid

1. Remove the X contactor and Y relay (see "Replacements" under Solenoid Control System).
2. Remove stop nut (13).

3. Remove four screws (7) which attach lower part of magnet to upper part of magnet.
4. Remove two screws which attach upper part of magnet to the two side frames of the operating mechanism.
5. Install new closing solenoid in reverse order.

Coil (8), Fig. 10

1. Remove lower member of magnet, (see "Closing Solenoid" under "Replacements", items 1 to 3).
2. Remove wiring to coil (8) and remove coil.
3. Remove brass coil guides.
4. Install new coil in reverse order.

PROTECTIVE DEVICES

TIME DELAY UNDERVOLTAGE TRIPPING DEVICE

This device is mounted to a bracket on the right side of the operating mechanism (looking from the front). The purpose of this device is to trip the breaker for undervoltage. For rated voltage, the armature (3) is attracted by magnet (14). If the voltage falls below a predetermined value the magnet (14) releases the armature (3). Spring (4) then pulls armature (3) upward against the restraining force of the oil in cylinder (10); this action causes a minimum time delay of 3 seconds. When the spring overcomes the restraining force of the oil the armature engages screw (20) thus rotating the trip shaft and opening the breaker. (For parts reference refer to Fig. 16.)

ADJUSTMENTS, FIG. 16

An adjusting screw (20) in the trip lever is used to allow from 1/32 to 1/16 inch overtravel after tripping the breaker.

Adjusting screw (2) is used to adjust the armature so that it will pick-up at 80% of normal voltage and drop out between 30% and 60% of normal voltage.

Adjusting nut (8) on connecting rod (11) is intended for a minimum amount of adjustment of the time delay setting. From 1/4 to 3/8 inch of oil should be maintained in the cylinder at all times. In order to make an inspection of the oil, the cylinder may be unscrewed from the cap. G. E. silicone oil 9981LT40NV or similar grade should be used in the cylinder.

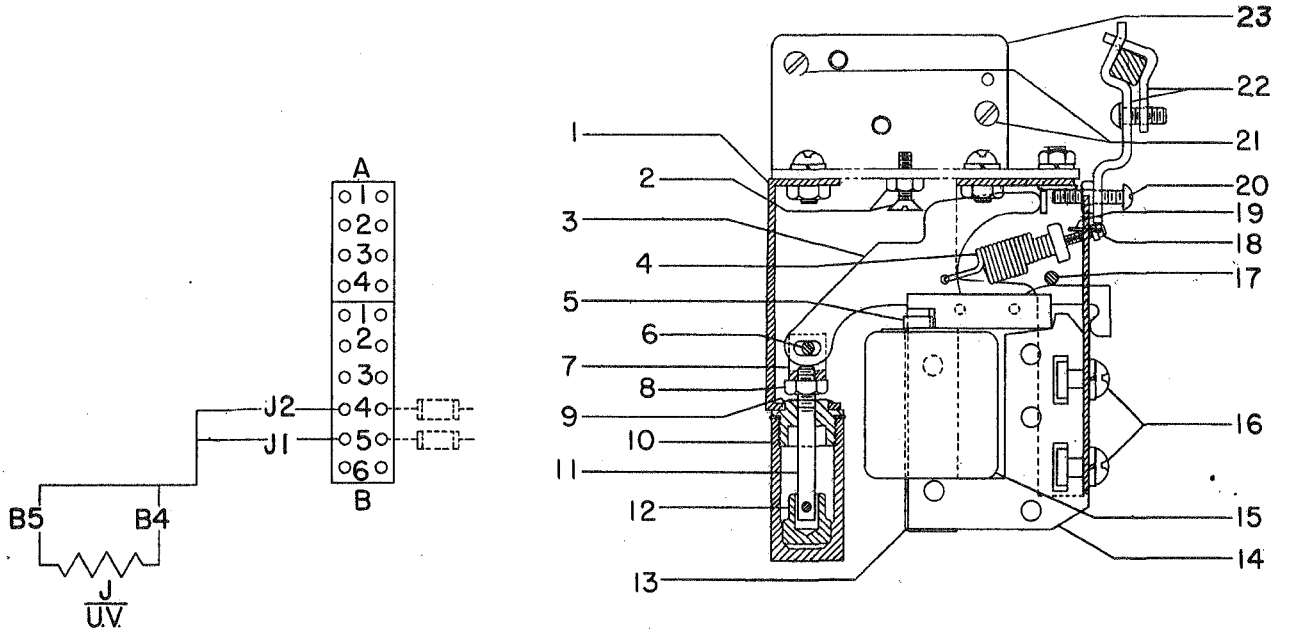

Fig. 16 (215017)

1. Bracket
2. Adjusting Screw & Nut
3. Armature
4. Spring
5. Shading Ring
6. Pin
7. Clevis
8. Adjusting Nut
9. Cap
10. Cylinder
11. Connection Rod
12. Plunger
13. Clamp
14. Magnet
15. Coil
16. Screws
17. Pin
18. Adjusting Screw
19. Locking Wire
20. Adjusting Screws
21. Mounting Screws
22. Trip Paddle & Clamp
23. Supporting Bracket

Fig. 16 Time Delay Undervoltage Tripping Device

REPLACEMENTS, FIG. 16

Coil

The only part of the undervoltage device that is likely to require replacement during the life of the breaker is the coil (15). The replacement procedure follows:

1. Disconnect coil leads.
2. Remove two screws (16), freeing magnet (14) and coil (15) from device. (It may be more convenient to remove the entire device from its supporting bracket (23) before removing the magnet and coil. If the device is of the time-delay type, bracket (1) will also have to be removed from bracket (23).)
3. Straighten laminations which were bent to hold shading ring (5) in place.
4. Remove shading ring (5).
5. Straighten end of coil clamp (13).
6. Remove coil, install new coil, and reassemble device by reversing disassembly procedure. (Note:- It is advisable to replace the magnet and coil assembly as nearly as possible in its exact original position in relation to the device frame. Before removing the magnet, note or mark its position relative to the frame. Doing this will result in having the same open air gap between armature and magnet and will insure the device's picking up at the same voltage value).

Device

If the entire device is replaced, simply remove the hardware fastening the frame of the device to supporting bracket (23). If a time-delay device, bracket (1) must also be removed from (23).

ADJUSTMENTS

When the armature (3) is open, (coil deenergized) it must push the trip paddle (22) at least 1/32" of an inch beyond the point at which the breaker trips. This may be checked by placing a 1/32" feeler gauge between the armature and the head of screw (2) with the breaker in the closed position and the armature held closed against the magnet. When the armature is released, it should move under the action of spring (4) just far enough to trip the breaker. This will ensure positive tripping of the breaker by the device. Adjustment is obtained by means of screw (20) which may be advanced towards the armature or retarded.

The armature pickup point is a function of the open air gap of the armature. The air gap is set by means of adjusting screw (2). This gap should be set so that the armature will "pick up" at 80% of rated voltage. In order to check this adjustment, a variable voltage source is necessary. The gap should be increased if "pick up" occurs at less than 80% of voltage or decreased if it occurs at more than 80%.

"Drop out" and subsequent tripping of the breaker is a function of the tension of spring (4). This is a factory adjustment. It should not be necessary to ever reset this adjustment in the field.

INSTANTANEOUS UNDERVOLTAGE TRIPPING DEVICE

This undervoltage tripping device is constructed similarly to the time delay undervoltage tripping device with the exception that the cylinder (10), plunger (12), connecting rod (11), clevis (7), bracket (1), and adjusting nut (8), as shown in Fig. 10 are omitted.

The adjustments and replacements for this device are also the same as those for the time delay undervoltage tripping device.

SERIES OVERCURRENT TRIPPING DEVICE

There are two types of overcurrent trip devices with which the breaker may be equipped. These are the EC-1 and the EC-2 devices. The principal difference between these two is that the former may have time delay characteristics which include a short time delay. The latter is used only for long time delay and instantaneous characteristics, or combinations of these two. For a description of the operation and adjustments of the EC-2 device, refer to Instruction Book GEI-50216.

Each series overcurrent tripping device is enclosed in a molded case and mounted by three screws and a bracket to the lower part of the pole unit base.

The EC-1 device can be provided with the following tripping combinations:

1. Long time delay, short time delay and instantaneous tripping.
2. Long time and short time delay tripping only.
3. Long time delay and instantaneous tripping.
4. Short time delay and instantaneous tripping.
5. Short time delay tripping only.
6. Instantaneous tripping.
   (a) Adjustable
   (b) Nonadjustable

SHORT TIME DELAY TRIPPING, FIG. 17

The armature (7) is retained by calibrating spring (8). After the magnetic force, produced by an overcurrent condition, overcomes this restraining force, the aramature movement is further retarded by an escapement mechanism which produces an inverse time delay characteristic. The mechanism is shown in the left side view of Fig. 17.

The pickup for this device can be field set between limits having a ratio of 2-1/2 to 1 in the range of 200 to 1000% of the coil rating.

LONG TIME DELAY TRIPPING, FIG. 17

The armature (10) is retained by the calibration spring (11). After the magnetic force, produced by an overcurrent condition, overcomes this restraining force, the armature movement is further retarded by the flow of silicone oil in a dashpot, which produces an inverse time delay characteristic. The mechanism is shown in the right side view of Fig. 17.

INSTANTANEOUS TRIPPING, FIG. 17

(a) Adjustable instantaneous tripping takes place after the magnetic force produced by an overcurrent condition, overcomes the restraining force of the calibration spring which can be adjusted by the calibration clamp nut (14).

(b) Nonadjustable instantaneous tripping takes place after the magnetic force produced by an overcurrent condition overcomes the restraining force of a nonadjustable spring.

SELECTIVE TRIPPING

Selective overcurrent tripping is the application of circuit breakers in series so that only the circuit breaker nearest the fault opens. Any one or combination of two or more of the preceding overcurrent devices may be used in a selective system. The breaker having the shorter time setting and lower pickup will trip before the breaker having the longer setting and higher pickup, provided the fault is on the part of the line protected by the breaker having the lower setting.

In order to reduce the possibility of damaging the equipment and to provide maximum safety to the operator, the overload caused by a fault is removed in a minimum amount of time by selective tripping. Overloads producing current which is less than the short time delay pickup are removed in a matter of a few seconds, while currents in excess of this value are removed in a fraction of a second.

For the exact characteristics and setting of each breaker in a selective system, reference should be made to the coordination chart furnished for the particular system.

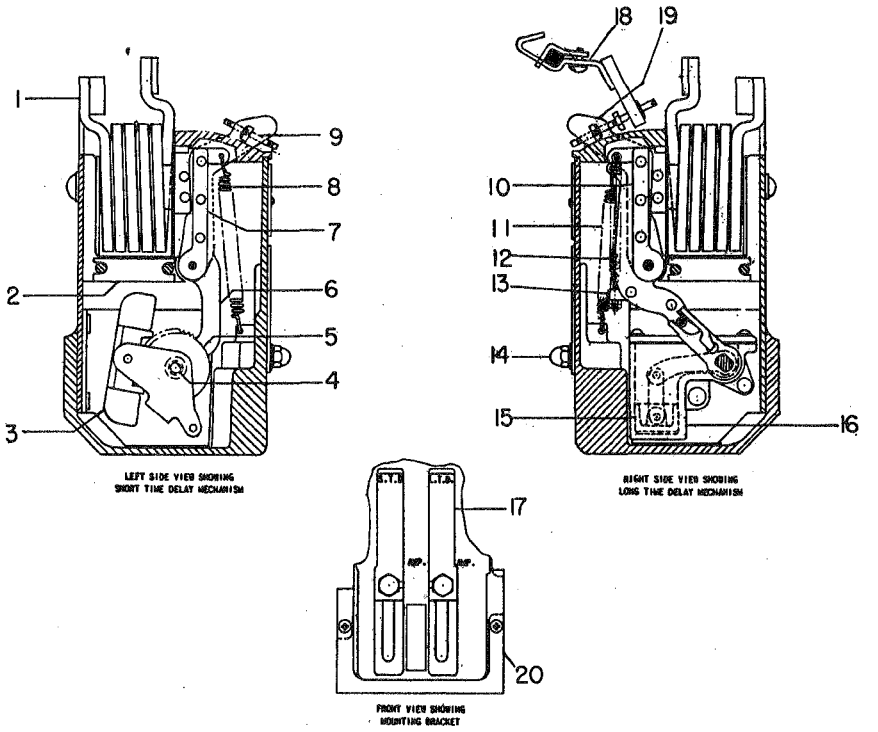

1. Series Coil
2. Magnet
3. Pallet
4. Pinion
5. Escape Wheel
6. Driving Segment
7. S.T.D. Armature
8. S.T.D. Calibration Spring
9. Trip Paddle Adjusting Screw
10. L.T.D. Armature
11. L.T.D. Calibration Spring
12. Instantaneous Trip Spring
13. Spring Holder
14. Calibration Clamp Nut
15. Plunger
16. Cylinder
17. Calibration Plate
18. Trip Paddle
19. Trip Arm
20. Clamping Bracket

Fig. 17 Type EC-1 Series Overcurrent Tripping Device

ADJUSTMENTS, FIG. 17

Calibration clamping nuts (14) are used to set the desired pickup for the adjustable elements.

In order to insure positive tripping by the overcurrent trip device, the trip arm, (19) Fig. 17, must have a minimum of 1/32" overtravel beyond the point at which the breaker trips. In order to check this overtravel, a probe may be used as illustrated in Fig. 18, the overtravel distance being considered at the point of contact between the trip arm and the adjusting screw of the trip paddle, (18) Fig. 17. Adjustment of overtravel is made by means of the adjusting screw in the trip paddle on the trip shaft. The screw in the trip arm is not intended for adjustment purposes.

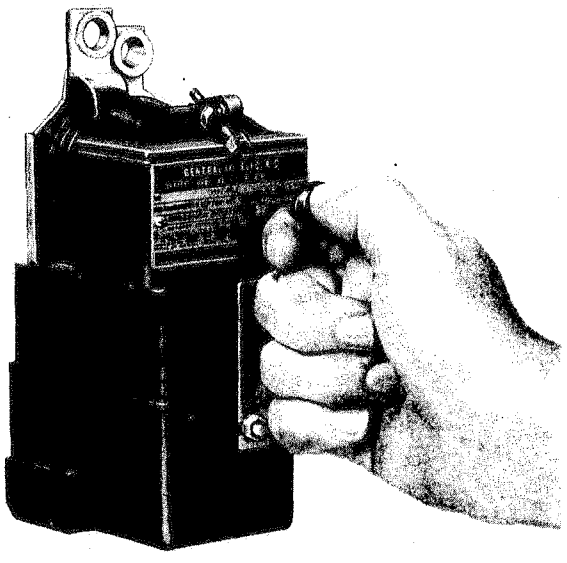

Fig. 18 Checking Travel Distance of Trip Arm on Series Overcurrent Tripping Device

REPLACEMENT

1. Follow steps 2 to 11 inclusive of procedure for replacing breaker mechanism.
2. Remove the bolts holding the coil to the lower stud.
3. Remove bracket and mounting screws.
4. Before installing a new device, check the travel of the trip arm with a rod or wire and push the armature solidly against the magnet (see Fig. 18). The trip arm should move at least 5/32". If there appears to be insufficient movement of the trip arm, or if the armature appears to be binding, the device should not be used.
5. Mount new trip device on pole unit. Be sure that allen head bolts which fasten series coil (1) are not cross-threaded and are firmly tightened down. If there is not good contact pressure against the stud, overheating and burning may result.
6. Check overtravel of trip arm (19). If adjustment is necessary, it whould be done now, when the adjustment screws are accessible, rather than after the breaker is completely reassembled.
7. Complete the reassembly of the breaker.

NOTE: No component parts of the overcurrent tripping devices are replaced. It will be necessary to install a new device when parts are worn or damaged.

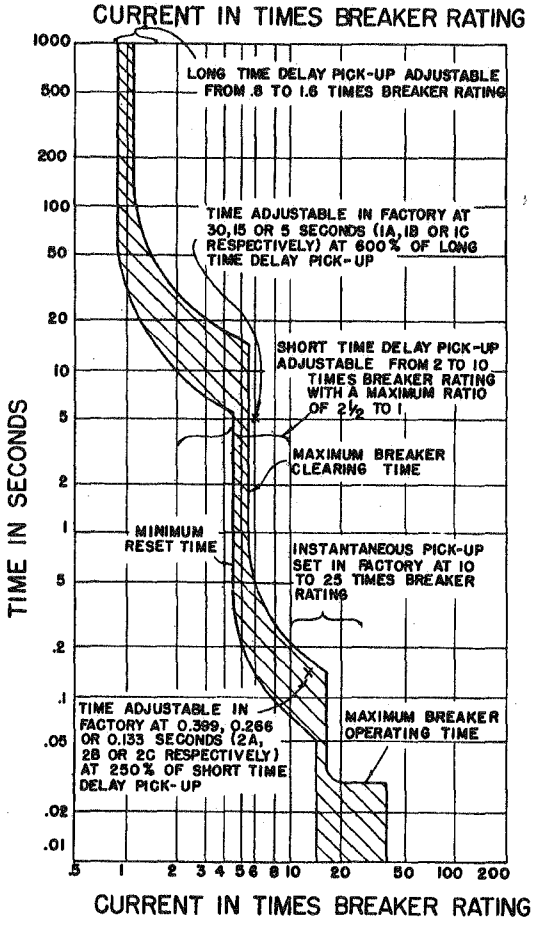

Fig. 19 Typical Time-Current Characteristic of EC-1 Overload Device

REVERSE CURRENT TRIPPING DEVICE

The device is enclosed in a molded case and is mounted on the right pole base similarly to the series overcurrent tripping device.

The reverse current tripping device (see Fig. 20) consists of a series coil (1) with an iron core mounted between two pole pieces (7), also a potential coil (4) connected across a constant source of voltage and mounted around a rotary-type armature (6). Calibration spring (3) determines the armature pick-up when a reversal of current occurs.

As long as the flow of current through the breaker is in the normal direction, the magnetic flux of the series coil and the magnetic flux of the potential coil produce a torque which tends to rotate the armature counter-clockwise. The calibration spring also tends to rotate the armature in the same direction. This torque causes the armature to rest against the stop screw (9) attached to a bearing plate on the right side of the device.

If the current through the series coil (1) is reversed, the armature (6) tends to move in the clockwise direction against the restraint of the calibration spring (3). When the current reversal exceeds the calibration setting, the armature revolves clockwise causing the trip rod (2) to move upward engaging the trip paddle (14) thereby tripping the breaker.

ADJUSTMENTS

No adjustments should be made in the field with the exception of checking for overtravel of the trip rod. Proper overtravel of the trip rod is provided, if the trip rod advances the trip paddle between 1/32" to 3/64" beyond the point where the breaker trips. To adjust for this amount of overtravel, lift the trip rod as high as possible after backing off the adjusting screw in the trip paddle (14) so that it will not touch the trip rod (2). Advance adjusting screw in the trip paddle until you can just trip the breaker by lifting the trip rod (2) as far as it will go. Then advance this same adjusting screw an additional 1-1/2 turns, thereby assuring positive tripping. Locking adjusting nut. Be extremely cautious not to have hands near moving parts of the breaker when making this adjustment.

REPLACEMENT

After removing the wiring for the potential coil the reverse current device can be removed and replaced by following the procedure outlines for replacing the series overcurrent device. For wiring, see Fig. 20.

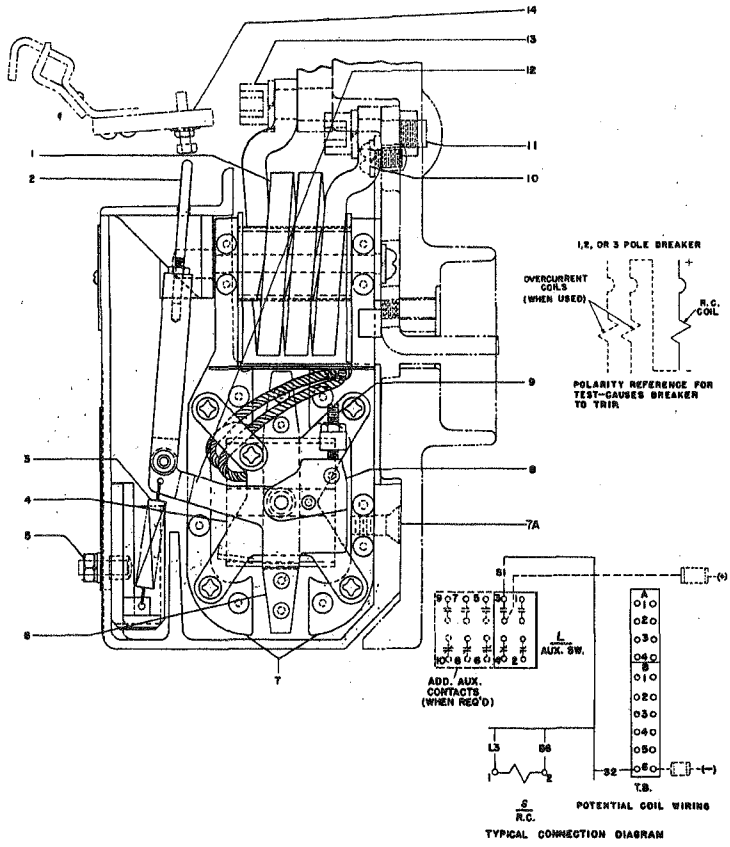

Fig. 20 (T-6490346)

1. Series Coil	4. Potential Coil	7. Pole Pieces	9. Stop Screw	12. Trip Crank
2. Trip Rod	5. Calibration Nut	7A. Screws	10. Mounting Screw	13. Screw
3. Spring	6. Armature	8. Counterweight	11. Screw	14. Trip Paddle

Fig. 20 Reverse Current Tripping Device

MISCELLANEOUS

SHUNT TRIPPING DEVICE

The shunt tripping device (refer to Fig. 21) is mounted on a bracket attached to the right side of the operating mechanism (looking from the front).

A remote switch or relay contacts are used to close the circuit of the device causing the armature (9) to engage the trip paddle (11) thereby tripping the breaker. The spring (2) is used to return the armature to the neutral position after the breaker trips.

To prevent overheating, the coil (7) is cut off by contacts of the auxiliary switch which are open when the breaker is open.

ADJUSTMENTS

From 1/32" to 1/16" overtravel of the armature is required when the breaker is tripped. If any adjustment is necessary to provide this amount of overtravel, the trip paddle is bent in or out accordingly.

REPLACEMENT

Coil

As with the undervoltage device, the only part that ever normally needs replacement is the coil of the device. The replacement procedure is as follows:-

1. Disconnect leads of coil (7).
2. Remove screws (5) which fasten magnet and coil to the frame of the device.
3. Remove magnet (6) and coil (7).
4. Straighten lower end of clamp (8) and remove coil from magnet.
5. Install new coil, reassemble and reconnect leads.

If, for some reason, the entire device is to be replaced, this is accomplished by removing the fasteners between the shunt trip device frame (3) and supporting bracket (13).

After replacing either the coil or the entire shunt trip device, the overtravel adjustment should be checked.

BELL ALARM AND LOCKOUT DEVICES

BELL ALARM DEVICE

A bell alarm device (see Fig. 22) is available which operates when an overcurrent trips the breaker. It consists primarily of a lever (7) and hanger (11) riveted to auxiliary shaft (6), latch (13), catch (16), switch (1), reset lever (3), and mounting bracket (4).

When the breaker is tripped by an overload, the overload device trip arm (8) causes lever (7), hanger (11), and latch (12) to rotate counterclockwise as a single member about pin (9). This disengages the latch from the catch (16). When the breaker opens, link (17) also releases the catch, allowing its spring to rotate it counterclockwise about pin (15). This in turn permits plunger of switch (1) to move downward, closing the lower contact of the switch and thereby completing the alarm circuit.

If the breaker is opened by means other than the overload device, the latch (12) remains in position and does not allow the catch to rotate even though it is released by link (17).

Operation of the reset lever (3) returns the catch and switch contacts to their original position. At the same time, spring (5) resets latch (12).

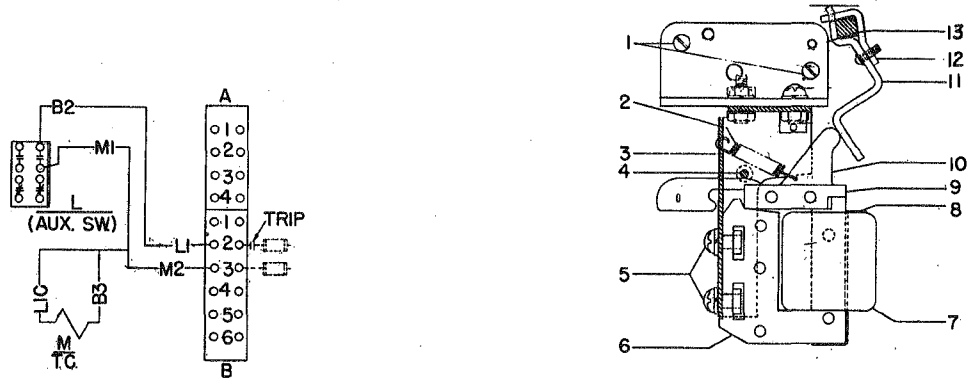

1. Screws
2. Spring
3. Frame
4. Pin
5. Screws
6. Magnet
7. Coil
8. Clamp
9. Armature
10. Armature Arm
11. Trip Paddle
12. Clamp
13. Supporting Bracket

Fig. 21 (215D176)

Fig. 21 Shunt Tripping Device

LOCKOUT DEVICE

The lockout device (see Fig. 22) consists of the same mechanism as the bell alarm device except that a screw (18) secures the hanger (11) to latch (12). This causes these two parts to function as a unit. Whenever the breaker is opened due to an overcurrent, the trip paddle (10) will be held in the tripped position by the lever (7), thereby locking the breaker in the open position until the lockout mechanism is reset by means of the reset lever (3).

ADJUSTMENTS

In order for the bell alarm and lockout device to function properly the following conditions must exist:

1. The auxiliary trip shaft (6) must swing freely from its points of suspension and hang perfectly level with respect to the breaker parts.
2. The auxiliary shaft must be positioned so that each of its clearance cut-outs has such a position relative to its respective overload trip arm that the trip arm can operate without encountering interference from the shaft and contacts the shaft only at lever (7).
3. When the breaker is closed, lever (7) must hang in a position such that it touches neither the trip arm (8) or the adjusting screw in the trip paddle (10). The optimum condition is an equidistant position.
4. The latch (12) and the catch (16) must be so positioned relative to one another than when the breaker is closed and reset, the latch will clear the catch when the latch is rotated counterclockwise. The catch is mounted on the same supporting bracket as switch (1). This bracket may be shifted vertically by dismounting the switch and loosening the hardware which fastens the bracket to the mechanism side frame.

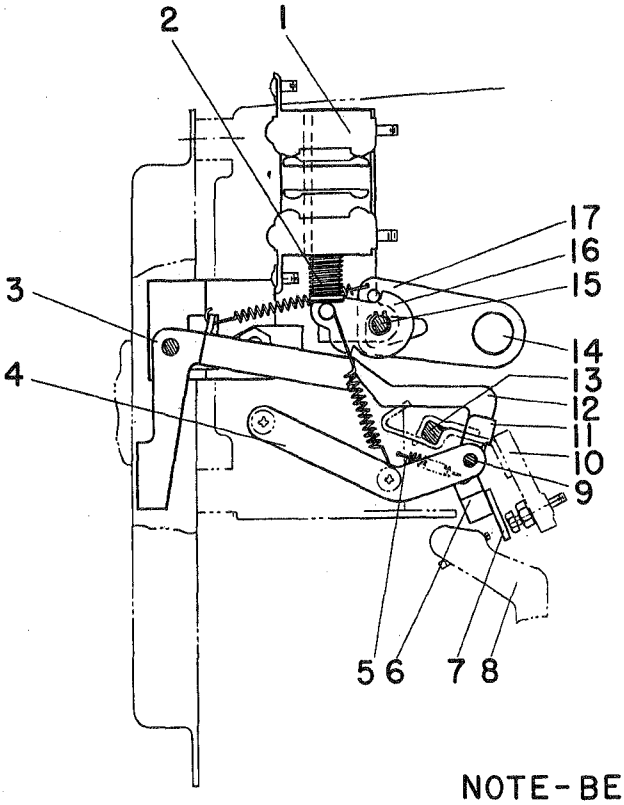

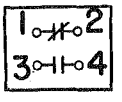

TYPICAL CONNECTION DIAGRAM

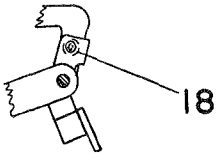

SPACER (18) & SCREW ADDED OTHERWISE SAME AS FIG. 29A

LOCKOUT DEVICE

NOTE - BELL ALARM OR LOCKOUT DEVICE OPERATES ONLY WHEN BREAKER TRIPS ON OVERCURRENT. MANUAL RESET.

1. Switch	7. Lever	13. Trip Shaft
2. Plunger	8. Trip Arm	14. Main Shaft
3. Reset Lever	9. Pin	15. Pin
4. Mounting Bracket	10. Trip Paddle	16. Catch
5. Spring	11. Hanger	17. Link
6. Auxiliary Shaft	12. Latch	18. Spacer

Fig. 22 Bell Alarm and Lockout Device

GENERAL PURPOSE INDOOR ENCLOSING CASE

This enclosing case (see Fig. 23) has a cover through which the front part of the escutcheon (2) extends. (See cover illustration). The cover is attached to the enclosing case by four mounting screws which screw into the internally threaded braces (1) in each corner of the enclosing case.

On the lower end of each side of the back plate of the breaker is fastened a supporting bracket (4). When the breaker is installed in the enclosing case, the lower projections of this support are inserted into slots in the inner ends of the angles (3) which are welded to the sides of the case. The breaker is then rocked backwards until the movable primary disconnects (see Fig. 26) engage the stationary stud (4) Fig. 26. Installation of the breaker is then completed by bolting the upper part of the breaker backplate to the upper supporting brackets (5) on the sides of the case. Thus, installing the breaker requires only the fastening of two mounting bolts (6).

A removable steel plate in the top and bottom of the case provides means of making any convenient arrangement desired for the entrance and exit of line and load cables.

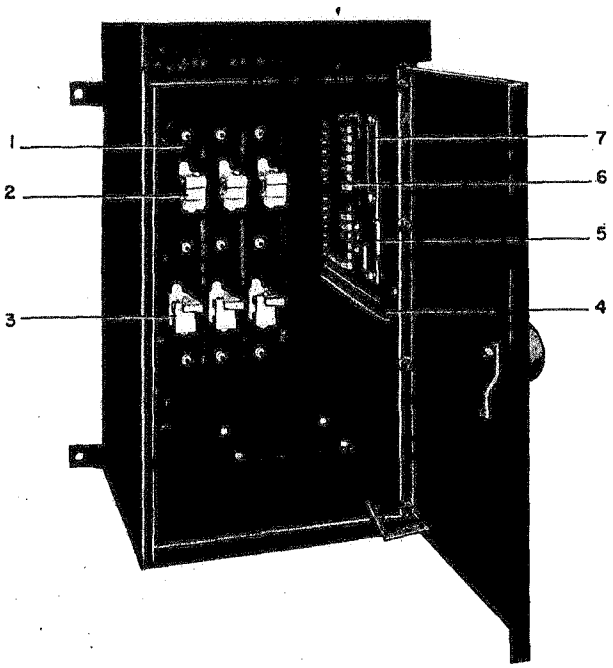

1. Sub-base
2. Upper Stationary Primary Disconnect
3. Lower Stationary Primary Disconnect
4. Carriage Guide and Support Channel
5. Housing Rack-out Cam
6. Stationary Secondary Disconnects
7. Steel Plate

Fig. 24 Weather Resisting Enclosing Case

Three sub-bases are bolted to the rear of the enclosing case. The upper and lower connectors are bolted to the sub-bases. These connectors include solderless connectors for securing the cables of the power circuits.

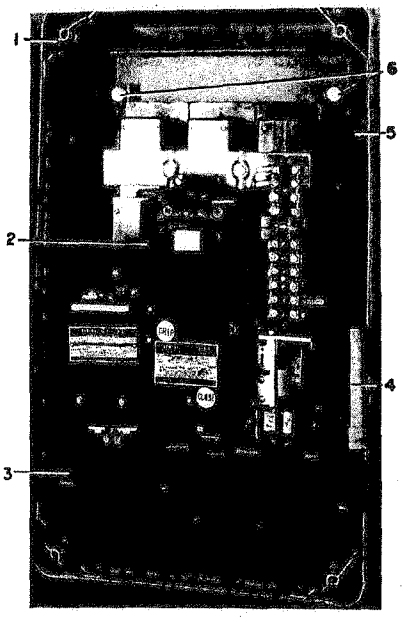

1. Threaded Braces
2. Escutcheon
3. Mounting Angle
4. Lower Supporting Bracket
5. Upper Supporting Bracket
6. Mounting Bolts

Fig. 23 General Purpose Enclosing Case

WEATHER RESISTING ENCLOSING CASE

The weather resisting enclosing case is designed for outdoor use and consists of a steel enclosing case, Fig. 24, and a drawout type circuit breaker, Fig. 25.

ENCLOSING CASE, FIG. 24

The steel enclosing case contains three sub-bases (1) which are attached to the back of it. On each of these sub-bases there are mounted an upper (2) and lower (3) stationary primary disconnecting device; these devices include a solderless connector for securing the cables of the power circuits. On each side of the housing there is a carriage guide and support channel (4), a steel plate (7), and a housing rack-out cam (5). One or more stationary secondary disconnecting devices (6) (depending on the number of circuits required) are mounted on either / or both sides of the housing when necessary.

Fig. 23 (8021083)

Fig. 24 (8012766)

DRAWOUT BREAKER

The drawout type circuit breaker (see Fig. 25) consists of a circuit breaker mounted in a drawout carriage. The drawout carriage is equipped with guides, a racking handle and mechanism, and an interlock arrangement which prevents the insertion or withdrawal of the breaker while in the closed position. Also included are the primary and secondary disconnect devices. This type of breaker is used with weatherproof enclosures and switchgear equipments such as load center sub-stations. Their use in the latter case is covered more completely in Switchgear Instruction GEH-1830.

Inserting Breaker

To install the drawout breaker in the enclosing case, proceed as follows:

1. Raise the breaker so that the guides (5) rest in the supporting channel (4), Fig. 24.
2. Raise the rack-out handle and push the carriage back until the rack-out pins on the handle sockets rest against the back edge of the housing rack-out cams (5), Fig. 24.
3. Push downward on the rack-out handle, thus forcing the rack-out pins upward in the housing cam and the primary disconnecting devices into contact.
4. Pull the rack-out handle downward so that locking pin (4), Fig. 25, is in the vertical section of the cam slot (8), Fig. 25. The breaker trip cam, guided by the rack-out handle, now permits the breaker to be closed.

Withdrawal

To withdraw the breaker from the enclosing case, proceed as follows:

1. Trip the breaker by pushing the manual trip button. If the breaker is not open the positive interlock lever (2) will prevent locking pin (4) from moving upward and will thereby prevent withdrawal of the breaker.
2. Lift the rack-out handle vertically. This operation unlocks the breaker carriage and raises the breaker trip cam, preventing closing of the breaker.
3. Pull the rack-out handle forward in a circular motion until the primary disconnecting devices are disengaged. The breaker can now be removed from the enclosing case by pulling foward on the rack-out handle.

NOTE: To test and inspect the drawout breaker when it is not in the enclosing case, it is necessary that the locking pin (4), Fig. 25 be at the bottom of the cam slot (8), Fig. 25.

DISCONNECTS

PRIMARY DISCONNECTS

The primary disconnects (see Fig. 27) are attached to the circuit breaker studs on the rear side of the breaker.

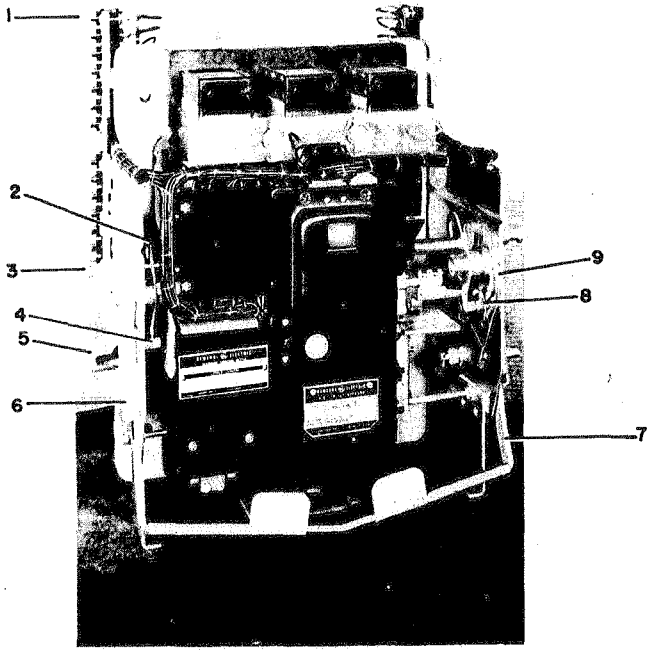

1. Secondary Disconnect
2. Lever Interlock
3. Rack-Out Pin
4. Locking Pin
5. Guide
6. Handle Socket
7. Rack-Out Handle
8. Cam Slot
9. Trip Cam

Fig. 25 AK-1-25 Drawout Breaker

Fig. 25 (8021019)

Each disconnect consists of four contact fingers (3) secured to each breaker stud (7) by screw (1) and retainers (6 and 8). A pair of springs (2) exert pressure on the contact fingers when engaging the stationary studs (4). Stop (5) and retainers (6 and 8) serve to maintain the proper alignment of the fingers when engaging the breaker studs.

Fig. 27 illustrates the construction of the primary disconnect for the AK-1-25 breaker. Note that the eccentric bushing in the center of the assembly is positioned so that its thinnest wall section is away from the breaker and toward the stationary stud. The assembly of the disconnect for the AK-1-15 is the same except the central bushing is not eccentric and retainer (8) is of a different design.

NOTE: For instructions on mounting the breaker by means of disconnects, see "Dead Front Breakers" under Installation.

ADJUSTMENTS

When the proper amount of contact pressure is exerted against the stationary stud, the dimension from the top side of the upper washer to the bottom side of the lower washer on screw (1) should be approximately 3-31/32" for AK-1-15 breakers and 3-29/32" for AK-1-25 breakers. To adjust for proper contact pressure, the nuts on the bottom of screw (1) should be backed off or advanced, as required. This adjustment should only be made on replacement disconnects, not on those which are factory assembled. When set at the factory, an accurate pressure gage is used, and resetting to the dimensions given will make the adjustment less accurate in this instance.

SECONDARY DISCONNECTS, FIG. 26

The secondary disconnects (see Fig. 26 and (1) Fig. 25) serve as connections between breaker control circuit elements and external control circuits. They are used only on drawout type breakers. A conventional terminal board serves the same purpose on stationary mounted and general purpose enclosure mounted breakers. The secondary disconnects allow removal of the breaker without the necessity of having to detach external connections.

The movable part of the secondary disconnect consists of an insulating body which holds a conducting, spring loaded plunger. As the breaker moves into its enclosure the plunger is cammed inward by the stationary part of the disconnect.

Replacement of Movable Secondary Disconnects

1. Unfasten disconnect body from drawout carriage.
2. Open tabs which hold wires on inner side.
3. Pull contact tip loose from hollow tube.
4. Remove contact tip by cutting wire at its base.
5. Push wire through hollow tube of new disconnect assembly.
6. Strip insulation off end of wire to about 1/4 of an inch from end.
7. Place new contact tip on end of wire and crimp.
8. Pull wire through hollow tube until contact tip fits snugly against end of hollow tube.
9. Crimp tab on other side of assembly to hold wire in place.
10. Any hollow tubes which are not used should be pushed into the disconnect body and held in that position by placing fibre spacers over inner ends of the tubes and spreading tabs. (See Fig. 26).
11. When all wires have been connected, refasten the body of the assembly to the breaker drawout carriage.

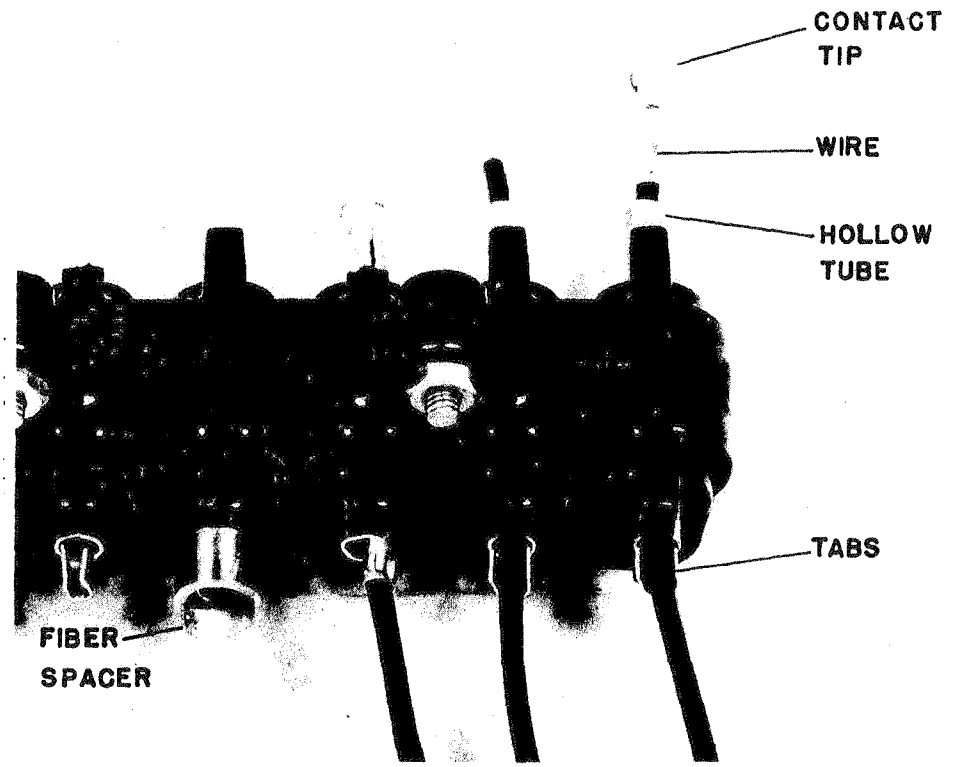

Fig. 26 (801F973)

Fig. 26 Assembly of Movable Portion of Secondary Disconnects

TYPES AK-15Y1 AND AK-1-25Y1 BREAKERS

(REFER TO FIG. 28)

The Type AK-1-15Y1 and AK-1-25Y1 breakers are intended for the protection of resistance welding machines. They trip instantaneously at higher current settings than breakers provided with the regular instantaneous adjustable overcurrent tripping device. This type breaker differs from the regular breaker only in the provision that higher current settings may be obtained.

Standard calibration ranges for Type AK-1-15Y1, Fig. 28, are as follows:

a. 300 to 800 amperes
b. 600 to 1500 amperes

Standard calibration ranges for Type AK-1-25Y1, Fig. 28, are as follows:

a. 600 to 1500 amperes
b. 1400 to 4000 amperes
c. 2000 to 5000 amperes

Other ranges can be provided within reasonable limits where the highest calibration settings will not exceed approximately 2-1/2 times the lowest calibration setting.

These breakers are not given a continuous current rating since the duty imposed is intermittent and quite variable depending upon various types of welding to be done. The breakers are designed to safely carry "during-weld amperes" or "during-weld KVA" at welding periods not exceeding the corresponding "duty cycle" as tabulated below. ("Duty cycle" is the per cent of time that current flows in any one minute.)

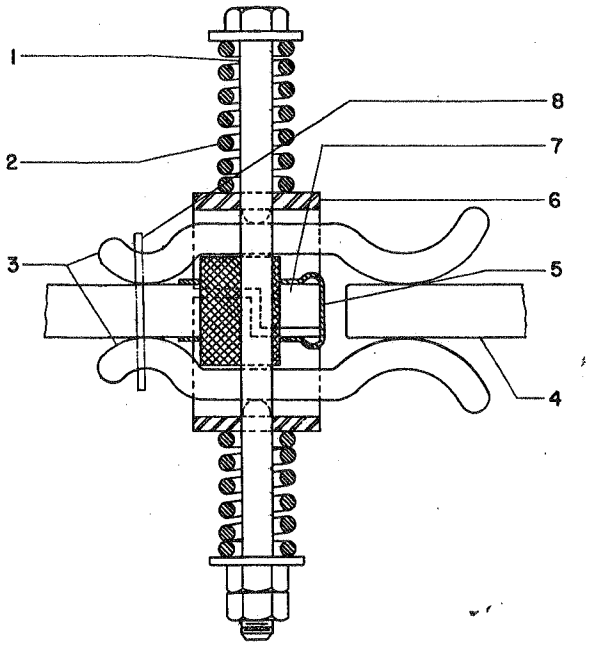

1. Screw
2. Spring
3. Contact Fingers
4. Stationary Stud
5. Stop
6. Retainer
7. Breaker Stud
8. Retainer

Fig. 27 Primary Disconnects

RENEWAL PARTS

When ordering renewal parts, address the nearest Sales Office of the General Electric Company, specifying the quantity required and describing the parts by catalogue numbers as shown in Renewal Parts Bulletin, GEF-3506.

In the absence of a Renewal Parts Bulletin, the described parts should be identified by giving the complete nameplate data of the circuit breaker or accessory.

Renewal parts which are furnished may not be identical with the original parts, since improvements are made from time to time. Parts which are furnished will be interchangeable.

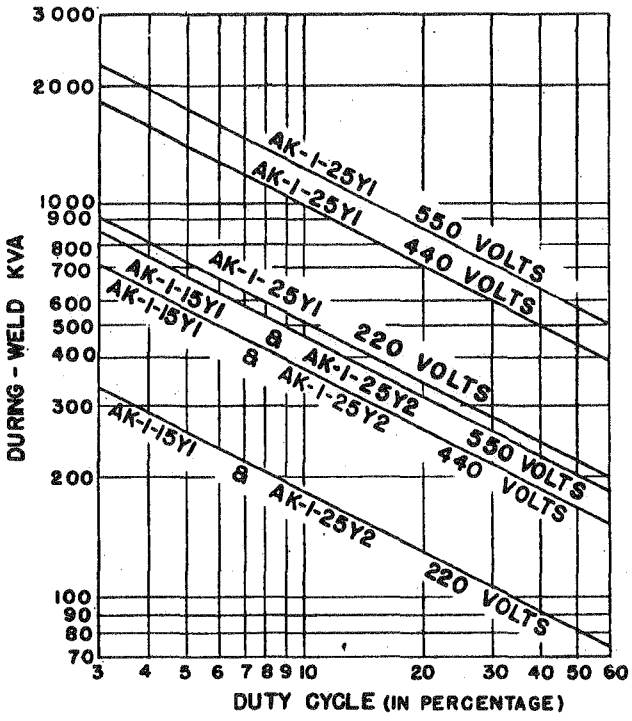

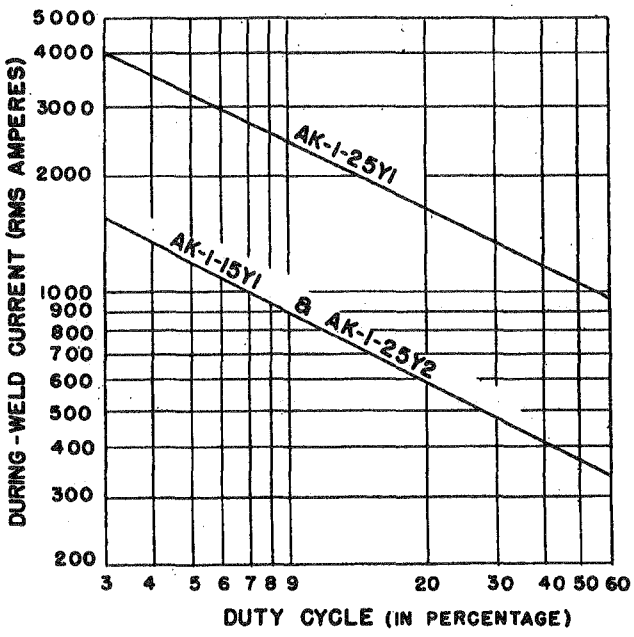

Fig. 28 (267B332)

Duty Cycle (%)	During-weld Amp Rms	AK-1-15Y1 Breaker During-weld Kva 220 Volts	440 Volts	550 Volts	Duty Cycle (%)	During-weld Amp Rms	AK-1-25Y1 Breaker During-weld Kva 220 Volts	440 Volts	550 Volts
3	1530	337	674	841	3	4040	890	1780	2225
4	1325	292	584	729	4	3500	770	1540	1925
5	1185	261	522	652	5	3130	689	1378	1722
6	1080	238	475	594	6	2860	629	1258	1574
7	1000	220	440	550	7	2740	580	1161	1453
8	936	206	412	516	8	2640	544	1087	1360
9	884	194	388	486	9	2330	513	1025	1282
10	839	185	370	461	10	2215	487	974	1219
20	594	131	262	327	20	1566	345	689	861
30	484	108	215	266	30	1278	281	562	703
40	419	92	184	231	40	1107	244	487	609
50	375	83	165	206	50	990	218	436	545
60	342	75	150	188	60	903	199	398	497

Fig. 28 Current and Duty Cycle Limits of Types AK-1-15Y1 and AK-1-25Y1 Breakers